Town of Hilton Head Island

Design Review Board Meeting

Tuesday, December 9, 2025, 2:30 PM
1 Town Center Court, Hilton Head Island, SC
Conference Room Four

The Design Review Board meeting will be held in person at Town Hall in Conference Room Four

1. **Call to Order**
2. **Adoption of the Agenda**
3. **Approval of the Minutes**
   - **a.** Regular Meeting Minutes of November 12, 2025
   - **b.** Regular Meeting Minutes of November 25, 2025
4. **Unfinished Business**
   - **a.** DRB-001113-2025 - 86 Helmsman Way - Black Marlin Outdoor Bar - Final
5. **New Business**
   - **a.** DRB-001102-2025 - 33 Shelter Cove Lane — Shelter Cove Park Expansion - Conceptual
6. **Public Comment - Non Agenda Items**
7. **Board Business**
   - **a.** Consideration and Review of Amendments to the Rules of Procedure
8. **Staff Reports**
9. **Adjournment**

FOIA Compliance: Public notification of this meeting has been published, posted, and distributed in compliance with the South Carolina Freedom of Information Act and the requirements of the Town of Hilton Head Island.

In accordance with the requirements of Title II of the Americans with Disabilities Act of

1990 ("ADA"), the Town of Hilton Head Island will not discriminate against qualified individuals with disabilities on the basis of disability in its services, programs, or activities. Auditory accommodations are available. Any person requiring further accommodation should contact the Town of Hilton Head Island ADA Coordinator as soon as possible but no later than 48 hours before the scheduled event.

Municipal Association of South Carolina (MASC) Civility Pledge:
“I pledge to build a stronger and more prosperous community by advocating for civil engagement, respecting others and their viewpoints, and finding solutions for the betterment of my city or town.”

Town of Hilton Head Island
DESIGN REVIEW BOARD MEETING
Wednesday, November 12, 2025, 2:30 PM
Minutes

1. Call to Order

Chair Carstens called the meeting to order at 2:33 pm.

In attendance: Chairman Judd Carstens, Megan Fitzpatrick, Todd Theodore, Cathy Foss. Vice Chair Annette Lippert, Patty Pastor and Tom Parker (recused) were excused.

2. Adoption of the Agenda

Mr. Theodore made a motion to adopt the agenda. Ms. Fitzpatrick seconded. The motion passed unanimously.

3. Approval of the Minutes

a. Regular Meeting Minutes of October 28, 2025

Ms. Foss made a motion to approve the meeting minutes of October 28, 2025. Mr. Theodore seconded. The motion passed unanimously.

4. Unfinished Business

a. DRB-001075-2025 - Sandalwood Food Pantry - 8 August Lane - Final

Melissa Paul-Leto presented the Sandalwood Food Pantry for final review. The applicant answered questions from the Board. Ms. Fitzpatrick motioned to approve with the following conditions: include exterior lighting cut sheet; add gravel to connect pathway; ensure gates and hardware on barn doors will be dark bronze. Ms. Foss seconded. The motion passed unanimously.

5. New Business

6. Public Comment - Non Agenda Items

7. Board Business

The Board called for confirmation at the earliest opportunity that the next meeting will be held on the 25th. A follow-up discussion on signage and window pane color for One Hot Mama's was requested.

8. Staff Reports

9. Adjournment

The meeting adjourned at 2:50pm.

Town of Hilton Head Island
DESIGN REVIEW BOARD MEETING
Tuesday, November 25, 2025, 2:30 PM
Minutes

1. Call to Order

Chair Carstens called the meeting to order at 2:30 p.m.

In attendance: Chair Carstens, Vice Chair Lippert, Tom Parker and Cathy Foss.

2. Adoption of the Agenda

Ms. Foss made a motion to adopt the agenda. Mr. Parker seconded. The motion passed unanimously.

3. Approval of the Minutes

a. Regular Meeting Minutes of November 12, 2025

Mr. Parker made a motion to table the meeting minutes of November 12, 2025 until the next meeting. Ms. Foss seconded.

4. Unfinished Business

a. DRB-001095-2025 - 70 Beach City Road — First African Baptist Church - Final

Melissa Paul-Leto, Principal Planner, presented the First African Baptists Church for final review. The applicant answered questions from the board. Mr. Parker made a motion to approve with the following conditions: the drawings should be updated to eliminate inconsistency in the detailing of the graphics on the different elevations to include the pilasters matching symmetrically and window trim detail, service yard should provide a detail to confirm its location, the stair and ramp coordination of the existing building to Civil, architecture to Civil needs to be shown, the gothic arch should be reconfigured to avoid the roof, a site-built colorboard should be constructed for staff review of all materials including the roof, the coordinated drawings should be submitted for staff review and approval to avoid a return before the Board, the cut sheet steeple that was submitted is approved and will be on the coordinated set of drawings reflecting no cross, the elevations should be vetted and coordinated into one consistent set for staff to review. Ms. Foss seconded. The vote passed unanimously.

5. New Business

a. DRB-001104-2025 - 2 Lafayette Place — Chase Bank - Alteration

Melissa Paul-Leto presented Chase Bank for alterations. The applicant answered questions from the Board. The application was withdrawn to address comments from the

Board and offer an opportunity to provide a fuller set in order to make a more informed motion on the item.

6. Public Comment - Non Agenda Items

7. Board Business

Ms. Paul-Leto will notify the Board of proposed changes to the rules of procedure in advance of the next meeting and provide photos to be approved for submission into the design guide.

8. Staff Reports

9. Adjournment

The meeting was adjourned at 3:36 p.m.

Black Marlin Hurricane Bar
86 Helmsman Way
Final
December 9, 2025
DRB-001113-2025

Town of Hilton Head Island

Community Development Department
One Town Center Court
Hilton Head Island, SC 29928
Phone: 843-341-4757 Fax: 843-842-8908
www.hiltonheadislandsc.gov

FOR OFFICIAL USE ONLY
Date Received: _____
Accepted by: _____
DRB #: _____
Meeting Date: _____

Applicant/Agent Name: Timothy C Probst Company: PDG Architects
Mailing Address: 10 Palmetto Business Park Suite 201 City: Hilton Head Island State: SC Zip: 29928
Telephone: 843-785-5171 Fax: _____ E-mail: Tim@PDG-Architects.com
Project Name: Black Marlin Outdoor Bar Project Address: 86 Helmsman Way Palmetto
Parcel Number [PIN]: R 5 5 2 0 1 0 0 0 0 0 6 7 A 0 0 0 0
Zoning District: Light Commercial Overlay District(s): _____

CORRIDOR REVIEW, MAJOR
DESIGN REVIEW BOARD (DRB) SUBMITTAL REQUIREMENTS

Digital Submissions may be accepted via e-mail by calling 843-341-4757.

Project Category:

_____ Concept Approval – Proposed Development
__x__ Final Approval – Proposed Development
_____ Alteration/Addition
_____ Sign

Submittal Requirements for ***All*** projects:

__x__ Private Architectural Review Board (ARB) Notice of Action (if applicable): When a project is within the jurisdiction of an ARB, the applicant shall submit such ARB's written notice of action per LMO Section 16-2-103.I.4.b.iii.01. Submitting an application to the ARB to meet this requirement is the responsibility of the applicant.

__X__ Filing Fee: Concept Approval-Proposed Development $175, Final Approval – Proposed Development $175, Alterations/Additions $100, Signs $25; cash or check made payable to the Town of Hilton Head Island.

Additional Submittal Requirements:
Concept Approval – Proposed Development

__x__ A survey (1"=30' minimum scale) of property lines, existing topography and the location of trees meeting the tree protection regulations of Sec. 16-6-104.C.2, and if applicable, location of bordering streets, marshes and beaches.
__x__ A site analysis study to include specimen trees, access, significant topography, wetlands, buffers, setbacks, views, orientation and other site features that may influence design.
__x__ A draft written narrative describing the design intent of the project, its goals and objectives and how it reflects the site analysis results.
__x__ Context photographs of neighboring uses and architectural styles.
__x__ Conceptual site plan (to scale) showing proposed location of new structures, parking areas and landscaping.
__x__ Conceptual sketches of primary exterior elevations showing architectural character of the proposed development, materials, colors, shadow lines and landscaping.

Additional Submittal Requirements:

Final Approval – Proposed Development

__x__ A final written narrative describing how the project conforms with the conceptual approval and design review guidelines of Sec. 16-3-106.F.3.

__x__ Final site development plan meeting the requirements of Appendix D: D-6.F.

__x__ Final site lighting and landscaping plans meeting the requirements of Appendix D: D-6.H and D-6.I.

__x__ Final floor plans and elevation drawings (1/8"=1'-0" minimum scale) showing exterior building materials and colors with architectural sections and details to adequately describe the project.

__x__ A color board (11"x17" maximum) containing actual color samples of all exterior finishes, keyed to the elevations, and indicating the manufacturer's name and color designation.

_____ Any additional information requested by the Design Review Board at the time of concept approval, such as scale model or color renderings, that the Board finds necessary in order to act on a final application.

Additional Submittal Requirements:

Alterations/Additions

_____ All of the materials required for final approval of proposed development as listed above, plus the following additional materials.

_____ A survey (1"=30' minimum scale) of property lines, existing topography and the location of trees meeting the tree protection regulations of Sec. 16-6-104.C.2, and if applicable, location of bordering streets, marshes and beaches.

_____ Photographs of existing structure.

Additional Submittal Requirements:

Signs

_____ Accurate color rendering of sign showing dimensions, type of lettering, materials and actual color samples.

For freestanding signs:

_____ Site plan (1"=30' minimum scale) showing location of sign in relation to buildings, parking, existing signs, and property lines.

_____ Proposed landscaping plan.

For wall signs:

_____ Photograph or drawing of the building depicting the proposed location of the sign.

_____ Location, fixture type, and wattage of any proposed lighting.

Note: All application items must be received by the deadline date in order to be reviewed by the DRB per LMO Appendix D: D-23.

A representative for each agenda item is strongly encouraged to attend the meeting.

Are there recorded private covenants and/or restrictions that are contrary to, conflict with, or prohibit the proposed request? If yes, a copy of the private covenants and/or restrictions must be submitted with this application. ☐YES ☒NO

To the best of my knowledge, the information on this application and all additional documentation is true, factual, and complete. I hereby agree to abide by all conditions of any approvals granted by the Town of Hilton Head Island. I understand that such conditions shall apply to the subject property only and are a right or obligation transferable by sale.

I further understand that in the event of a State of Emergency due to a Disaster, the review and approval times set forth in the Land Management Ordinance may be suspended.



SIGNATURE

11.25.25

DATE

Sea Pines Commercial Architectural Review Board
175 Greenwood Drive
Hilton Head Island, SC 29928

November 17, 2025

Tim Probst, Partner AIA
PDG Architects
10 Palmetto Bay Business Park
PO Box 5010
Hilton Head Island, SC 23828
tim@pdg-architects.com

Dar Tim:

The Sea Pines Commercial Architectural Review Board (CARB) has authorized me to approve the commercial development plan to replace the existing outdoor Hurricane Bar located on property addressed as 86 Helmsman Way, Hilton Head Island, SC. I have copied Melissa Paul-Leto with the Town of Hilton Head Island to confirm my approval and for inclusion in the Town's records.

Please let me know if you have any questions.

Sincerely,

Shawn Colin
CARB Administrator

cc: Melissa Paul-Leto, Principal Planner of Design - Town of Hilton Head Island

Black Marlin Hurricane Bar
86 Helmsman Way
Final
Narrative
December 9, 2025
DRB-001113-2025

November 25, 2025

Town of Hilton Head Island DRB
One Town Center Court
Hilton Head Island, SC 29928

Project Narrative for the new Hurricane Bar at the Black Marlin Restaurant

The attached is PDG Architects response to the comments from Conceptual DRB submittal DRB-001002-2025.

1. Provide a materials board with colors. ***Included in this submittal is the color board along with a color elevation.***
2. Provide a demolition plan. ***We are providing a demolition plan with this submittal.***
3. Provide a side elevation with measurements and a section. ***We are providing a side elevation with measurements and a section.***
4. Provide any lighting specs. ***We are providing lighting specs with this submittal.***
5. Requires a Letter from the Sea Pines CSA prior to Final submittal. ***We are providing the approval letter from the Sea Pines CSA.***
6. Study the roof extent as it relates to the Carolina Crab Company nearby so that those corners do not connect in plan but are more like the right-side elevation. ***We shifted the plan so that roof does not conflict with the existing canopy.***
7. Clarify how the pavement will be repaired to match existing. ***We will cut the existing concrete at the expansion joints and pour new concrete to match.***
8. Provide countertop materials. ***The countertops will be wood tops with an epoxy clear coating.***
9. Provide roof materials, TVs, fans, colors of the garage doors, including the slats on the side. ***Roof materials, TVs, fans, and colors of the garage doors are called out on the new plans.***
10. Confirm that all the bar equipment is below the countertop height. ***The equipment will fit under new bar.***
11. Provide heights for anything within the center portion of the structure like various equipment, heaters, etc. that get mounted. ***We are providing the heights for all items under the canopy of new bar structure.***

Thank you for your time and consideration of this project.

Timothy C Probst, AIA

Black Marlin Hurricane Bar
86 Helmsman Way
Final
Existing Site Photos
December 9, 2025
DRB-001113-2025


Coors
LIGHT
Hurricane
Bar


Hurricane Bar


Coors
LIGHT

Black Marlin Hurricane Bar
86 Helmsman Way
Final - Plan Set
December 9, 2025
DRB-001113-2025

PARCEL 314
N/F MARINA DEVELOPMENT ASSOCIATES

ARCEL I.D. NO. R552-010-000-0314-0000
#90 HELMSMAN WAY

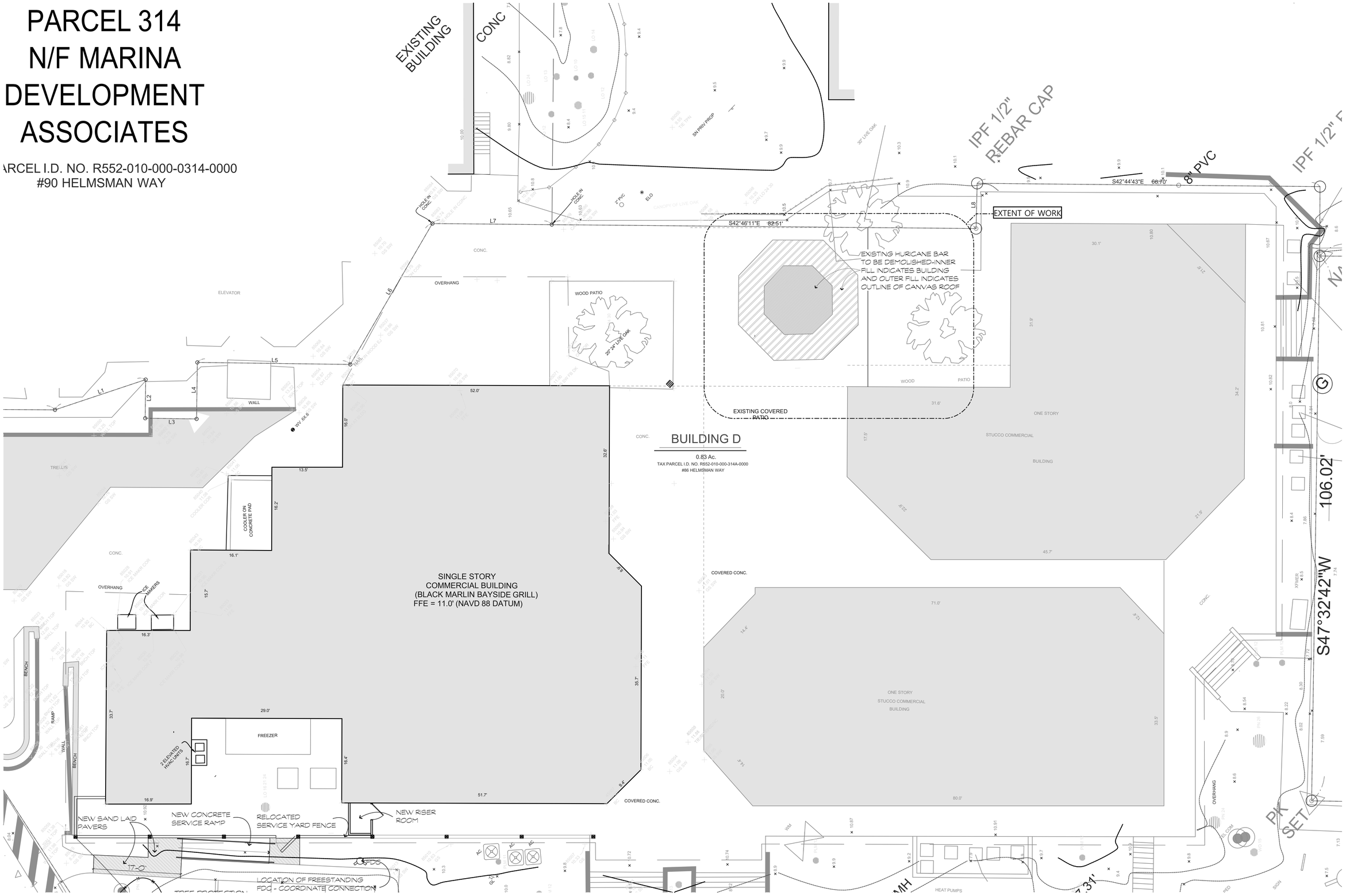

DEMO SITE PLAN

SCALE: 1/8" = 1'-0"

1 S.1.1

parkerdesigngrouparchitects
843.785.5171 POST OFFICE BOX 5000 HILTON HEAD ISLAND SC 29928
pdg ARCHITECTS

These documents & designs are the property of Parker Design Group | Architects & are not to be used or reproduced there of or for designs, working drawings, or construction of buildingswithout the written authorization from the copy write owner PDG|Architects 2025 copyright ©.

A NEW OUTDOOR BAR FOR :
THE BLACK MARLIN
86 HELMSMAN WAY
PALMETTO PAY MARINA
HILTON HEAD ISLAND, S.C.

REVISIONS

DRAWN BY TP
CHECKED BY TP
DATE OF ISSUE: 11/18/25
SCALE
JOB NO.
SHEET
S.1.1
OF SHEETS

N/F MARINA DEVELOPMENT ASSOCIATES

PARCEL I.D. NO. R552-010-000-0314-0000
#90 HELMSMAN WAY

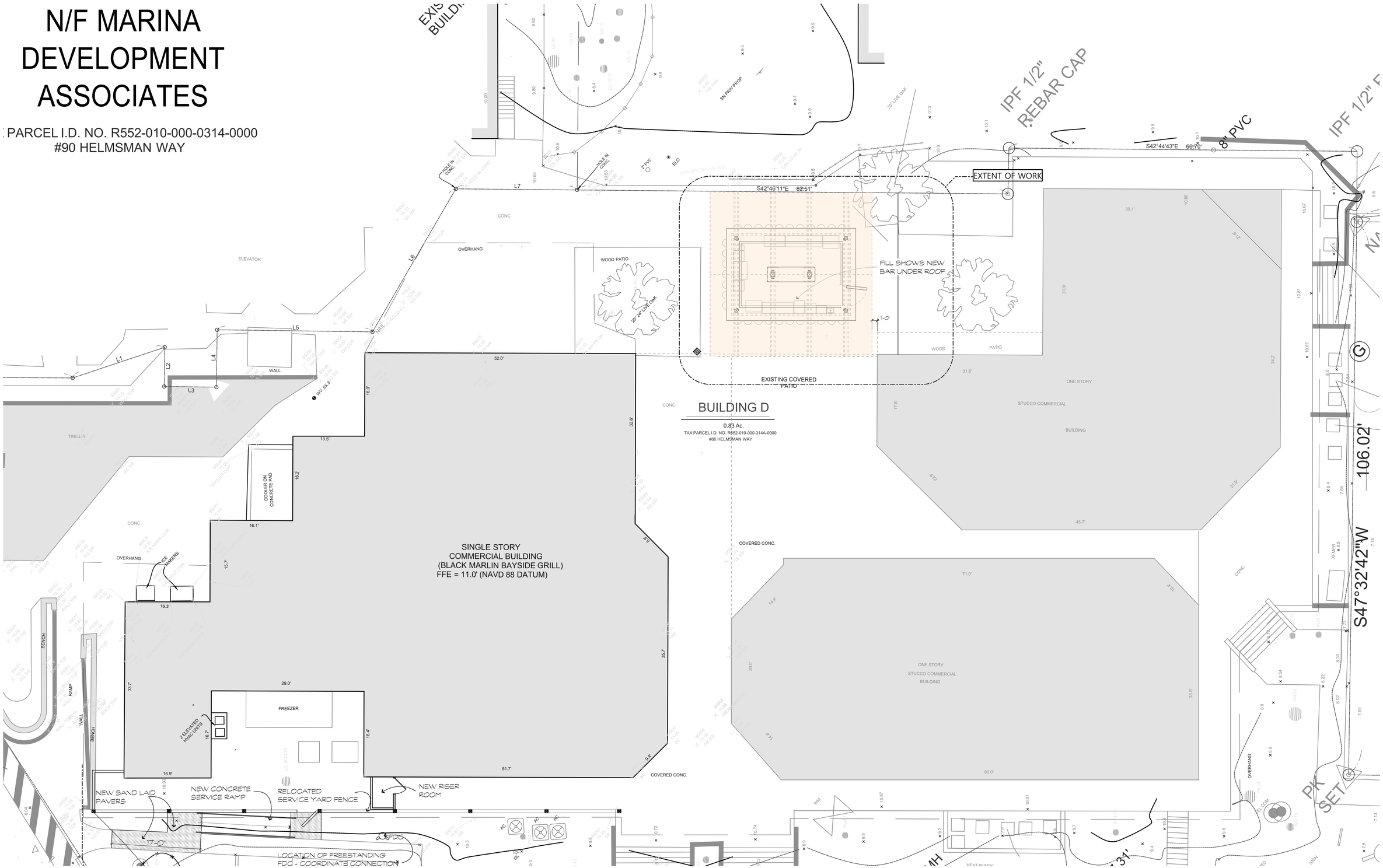

SITE PLAN
SCALE: 1/8" = 1'-0"

1
S.1.2

parkerdesigngrouparchitects
843.785.5171 POST OFFICE BOX 5000 HILTON HEAD ISLAND SC 29928

pdg ARCHITECTS

These documents & designs are the property of Parker Design Group | Architects & are not to be used or reproduced there of or for designs, working drawings, or construction of buildingswithout the written authorization from the copy write owner PDG|Architects 2025 copyright ©

A NEW OUTDOOR BAR FOR :
THE BLACK MARLIN
86 HELMSMAN WAY
PALMETTO PAY MARINA
HILTON HEAD ISLAND, S.C.

REVISIONS

DRAWN BY TP
CHECKED BY TP
DATE OF ISSUE: 11/18/25
SCALE
JOB NO.
SHEET
S.1.2
OF SHEETS

LIGHTING FIXTURE SCHEDULE

TYPE	MANUFACTURE	ID NUMBER	MOUNTING	LAMP	COLOR	REMARKS
A	WAC	WS-W2604-BZ	SURFACE	18 WATT LED	BRONZE	TUBE LIGHT
B			TAPE			UNDER COUNTER
C	MINKAAIRE	F753-KA	3' DROP		BRONZE	EXT FAN

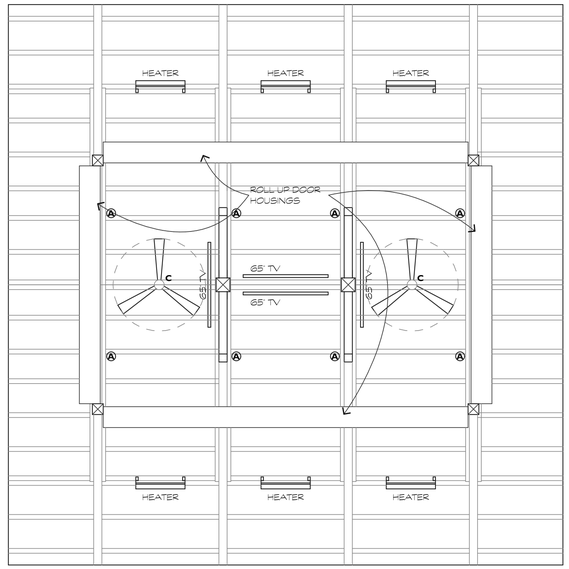

REFLECTED CEILING PLAN

SCALE: 1/4" = 1'-0"

3 A.1.1

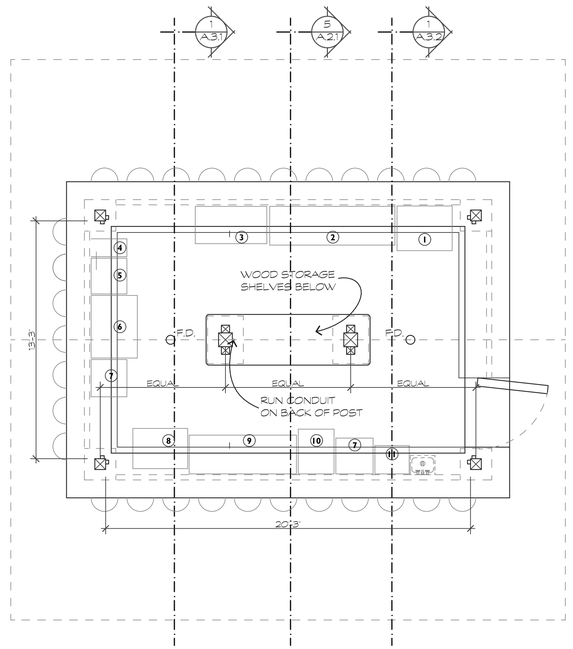

BAR PLAN

SCALE: 1/4" = 1'-0"

1 A.1.1

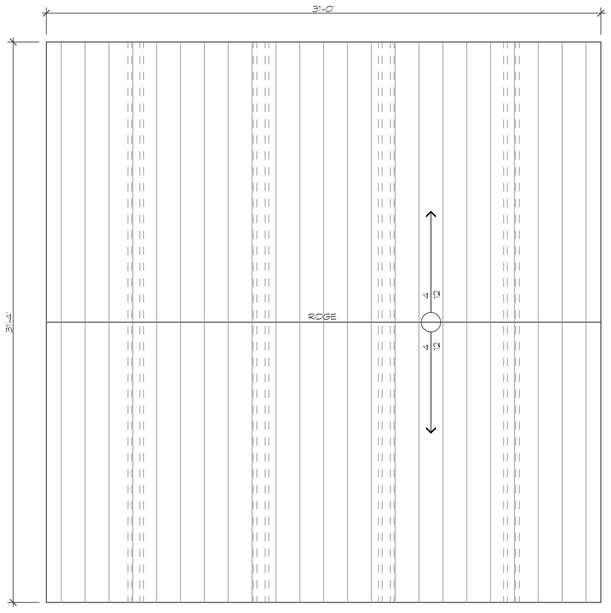

BAR ROOF PLAN

SCALE: 1/4" = 1'-0"

2 A.1.1

EQUIPMENT LEGEND

LETTER	QUANITY	VENDOR	ITEM	SIZE
1	1	TRUE	DBL. DOOR BACK BAR COOLER	24" W x 30" D
2	1	PERLICK	TRIPLE DOOR BACK BAR COOLER	84" W x 26" D
3	1	PERLICK	TOP REACH IN BOTTLE COOLER	48" W x 25" D
4	1		DUMP SINK W/ BLENDER SHELF	12" W x 24" D
5	1		BLENDER STATION / DRAINBOARD	24" W x 24" D
6	1	ADVANCE TABCO PRESTIGE	ICE BIN (W/ LIQUOR RAIL ATTACHED)	42" W x 31" D
7	2	ADVANCE TABCO PRESTIGE	LIQUOR STEP	24" W x 24" D
8	1	TRUE	TOP REACH IN BOTTLE COOLER	37" W x 27" D
9	1	PERLICK	(4) TAP KEG COOLER	72" W x 26" D
10	1	AVANTCO	(2) TAP KEG COOLER	24"W x 30" D
11	1	ADVANCE TABCO PRESTIGE	ICE BIN	23" W x 19" D

pdg parkerdesigngroup architects
843.785.5171 POST OFFICE BOX 5093 HILTON HEAD ISLAND SC 29938

These documents & designs are the property of Parker Design Group | Architects & are not to be used or reproduced there of or for designs, working drawings, or construction of buildingswithout the written authorization from the copy write owner PDG|Architects 2025 copyright ©

A NEW OUTDOOR BAR FOR :

THE BLACK MARLIN

86 HELMSMAN WAY
PALMETTO PAY MARINA
HILTON HEAD ISLAND, S.C.

REVISIONS	

DRAWN BY: TP
CHECKED BY: TP
DATE OF ISSUE: 11/18/25
SCALE:
JOB NO.:

SHEET

A.1.1

OF SHEETS

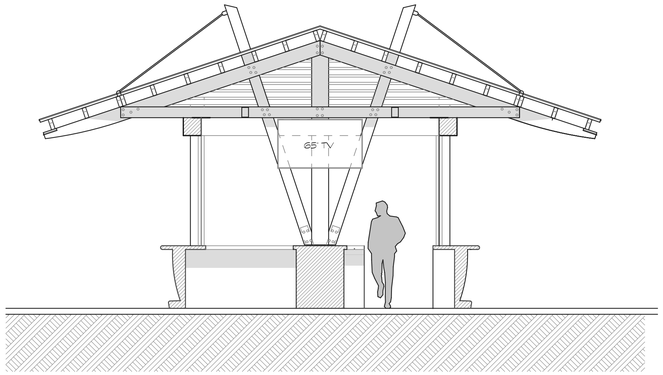

BUILDING SECTION

SCALE: 1/4" = 1'-0"

5 A.2.1

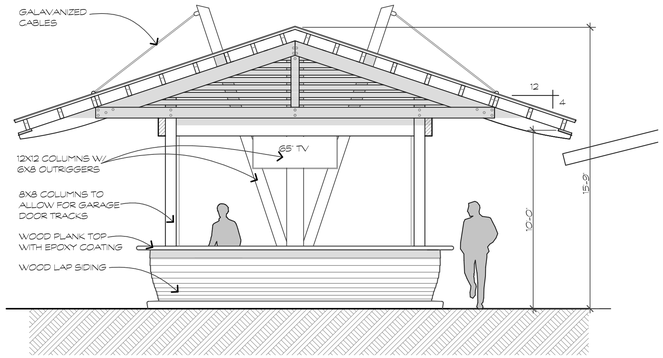

FRONT ELEV. - GARAGE DOOR UP

SCALE: 1/4" = 1'-0"

4 A.2.1

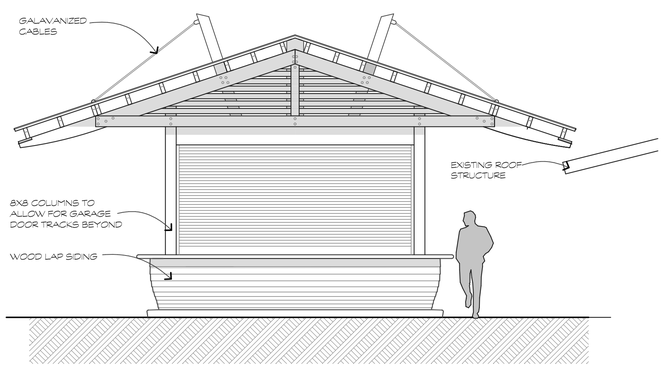

FRONT ELEV. - GARAGE DOOR DOWN

SCALE: 1/4" = 1'-0"

3 A.2.1



RIGHT SIDE ELEV. - GARAGE DOOR UP

SCALE: 1/4" = 1'-0"

2 A.2.1

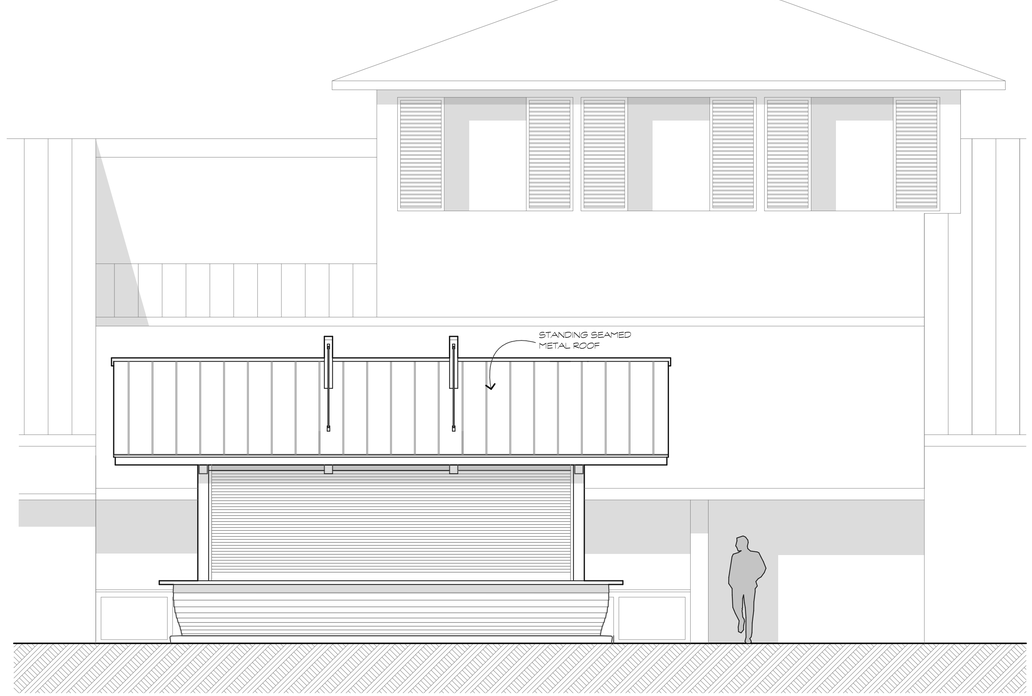

RIGHT SIDE ELEV. - GARAGE DOOR DOWN

SCALE: 1/4" = 1'-0"

1 A.2.1

pdg ARCHITECTS
parkerdesigngroup architects
843.785.5171 POST OFFICE BOX 5093 HILTON HEAD ISLAND SC 29938

These documents & designs are the property of Parker Design Group | Architects & are not to be used or reproduced there of or for designs, working drawings, or construction of buildingswithout the written authorization from the copy write owner PDGJArchitects 2025 copyright ©

A NEW OUTDOOR BAR FOR :
THE BLACK MARLIN
86 HELMSMAN WAY
PALMETTO PAY MARINA
HILTON HEAD ISLAND, S.C.

REVISIONS	

DRAWN BY	TP
CHECKED BY	TP
DATE OF ISSUE:	11/18/25
SCALE	
JOB NO.	
SHEET	A.2.1
OF	SHEETS



EXISTING BAR PHOTO



NEW BAR INSPIRATIONAL PHOTO

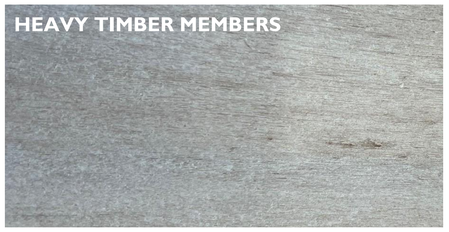

ROOF
PAC CLAD HEMLOCK GREEN

ROLL UP DOORS & BAR
SW 0016 BILLARD GREEN



NEW BAR COLORS

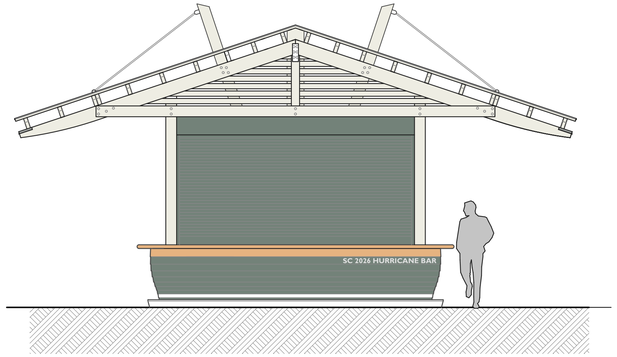

FRONT ELEV. - GARAGE DOOR UP (4 / A.2.2)
SCALE: 1/4" = 1'-0"

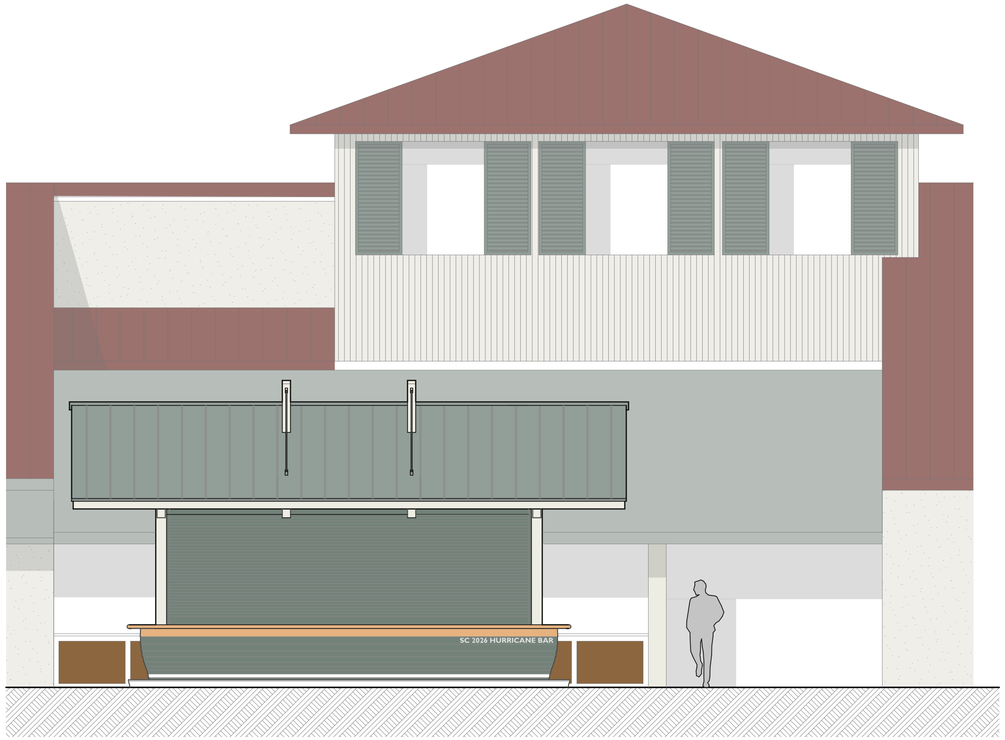

RIGHT SIDE ELEV. - GARAGE DOOR UP (2 / A.2.2)
SCALE: 1/4" = 1'-0"

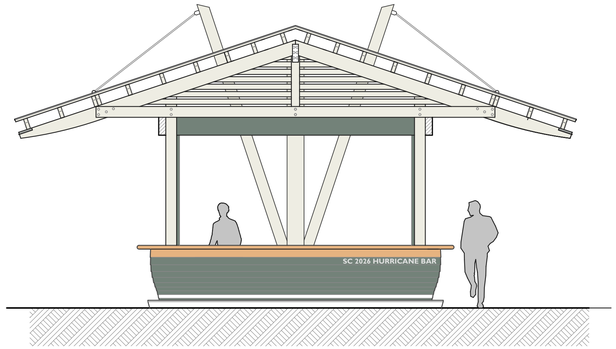

FRONT ELEV. - GARAGE DOOR DOWN (3 / A.2.2)
SCALE: 1/4" = 1'-0"

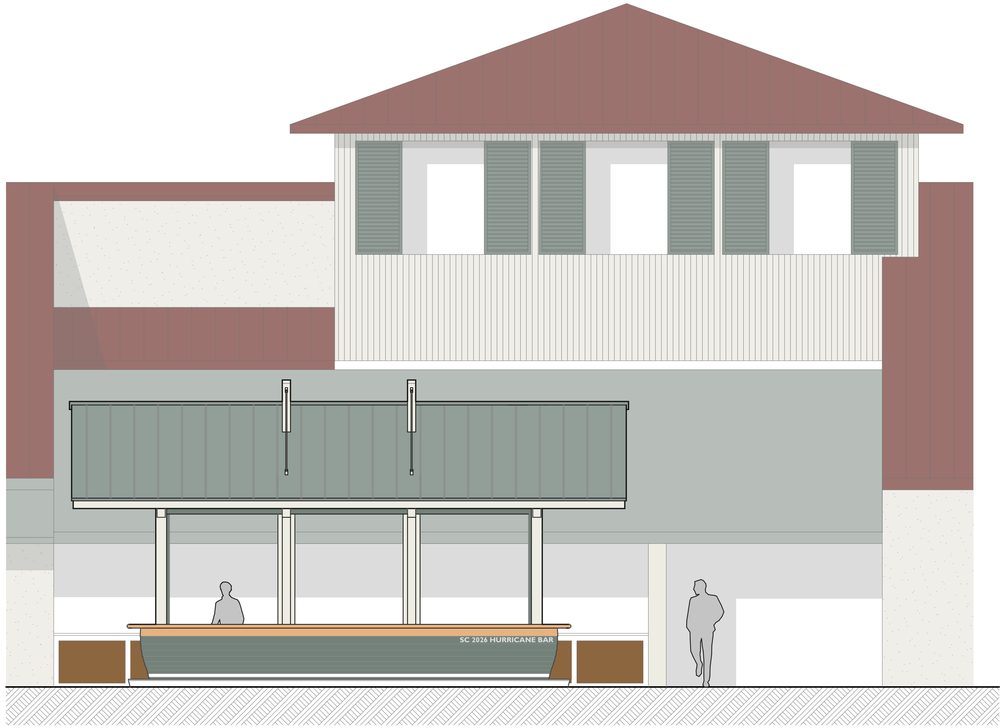

RIGHT SIDE ELEV. - GARAGE DOOR DOWN (1 / A.2.2)
SCALE: 1/4" = 1'-0"

pdg parkerdesigngroup architects
843.785.5171 POST OFFICE BOX 5093 HILTON HEAD ISLAND SC 29938
ARCHITECTS

These documents & designs are the property of Parker Design Group | Architects & are not to be used or reproduced there of or for designs, working drawings, or construction of buildingswithout the written authorization from the copy write owner PDG|Architects 2022 copyright ©

A NEW OUTDOOR BAR FOR :
THE BLACK MARLIN
86 HELMSMAN WAY
PALMETTO PAY MARINA
HILTON HEAD ISLAND, S.C.

REVISIONS

DRAWN BY	TP
CHECKED BY	TP
DATE OF ISSUE:	10/28/25
SCALE	
JOB NO.	
SHEET	A.2.2
OF	SHEETS

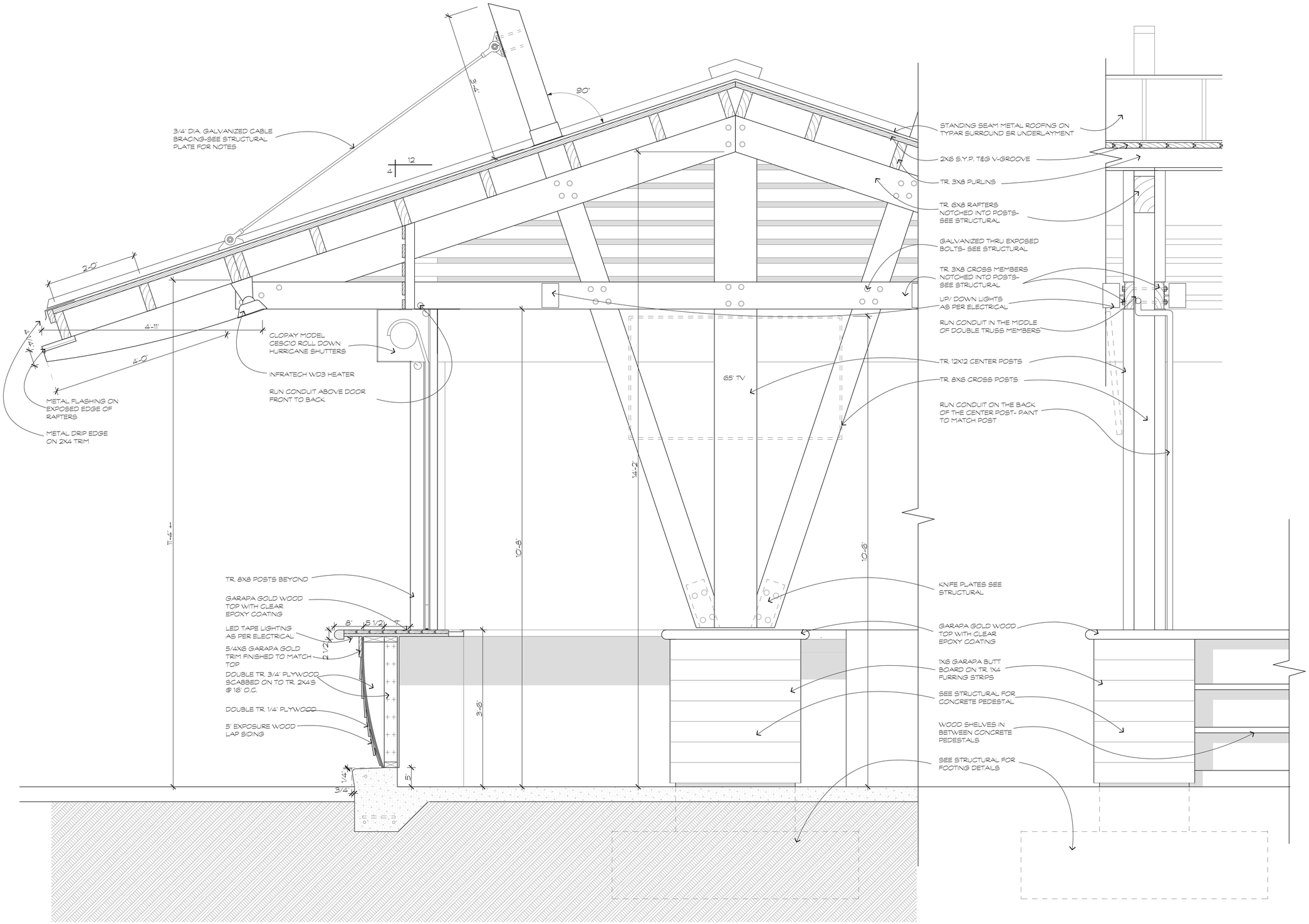

WALL SECTION

SCALE: 1" = 1'-0"

1
A.3.1

pdg parkerdesigngroup architects
843.785.5171 POST OFFICE BOX 5009 HILTON HEAD ISLAND SC 29938
ARCHITECTS

These documents & designs are the property of Parker Design Group | Architects & are not to be used or reproduced there of or for designs, working drawings, or construction of buildingswithout the written authorization from the copy write owner PDGArchitects 2025 copyright (C)

A NEW OUTDOOR BAR FOR :
THE BLACK MARLIN
86 HELMSMAN WAY
PALMETTO PAY MARINA
HILTON HEAD ISLAND, S.C.

REVISIONS	

DRAWN BY	TP
CHECKED BY	TP
DATE OF ISSUE:	11/18/25
SCALE	
JOB NO.	
SHEET	A.3.1
OF	SHEETS

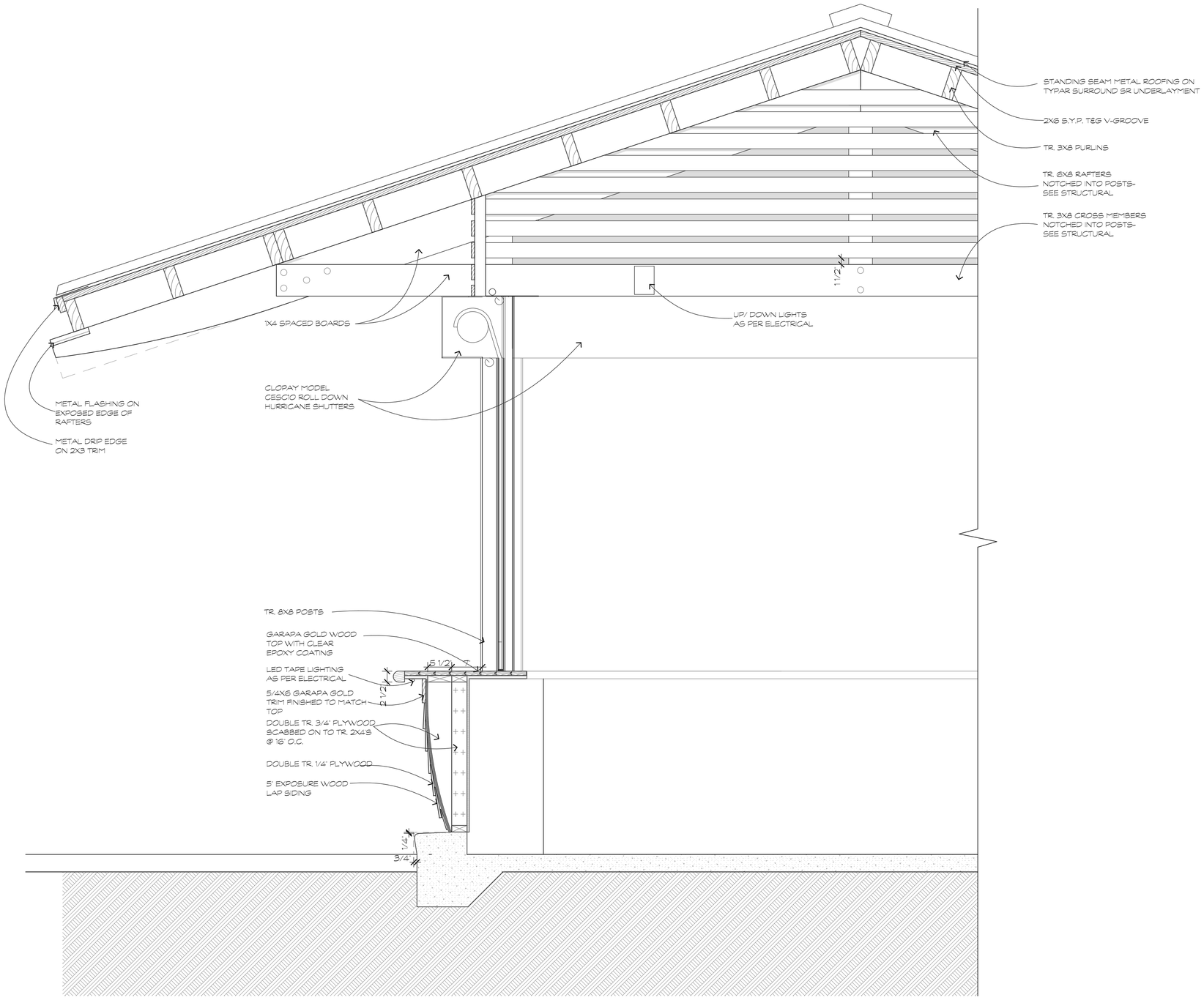

WALL SECTION

SCALE: 1" = 1'-0"

1
A.3.2

pdg parkerdesigngroup architects
843.785.5171 POST OFFICE BOX 5093 HILTON HEAD ISLAND SC 29938
ARCHITECTS

These documents & designs are the property of Parker Design Group | Architects & are not to be used or reproduced there of or for designs, working drawings, or construction of buildingswithout the written authorization from the copy write owner PDGJArchitects 2025 copyright (C)

A NEW OUTDOOR BAR FOR :
THE BLACK MARLIN
86 HELMSMAN WAY
PALMETTO PAY MARINA
HILTON HEAD ISLAND, S.C.

REVISIONS	

DRAWN BY: TP
CHECKED BY: TP
DATE OF ISSUE: 11/18/25
SCALE:
JOB NO.
SHEET: A.3.2
OF SHEETS

STRUCTURAL NOTES

GENERAL REQUIREMENTS
1. WHERE A SECTION OR DETAIL IS SHOWN FOR ONE CONDITION, IT SHALL APPLY TO ALL SIMILAR CONDITIONS.
2. COORDINATE ALL LIMITS AND DEPTHS OF DEPRESSIONS FOR FLOOR FINISHES WITH ARCHITECTURAL DRAWINGS AND SCHEDULES. LIMITS SHOWN ON STRUCTURAL DRAWINGS ARE SCHEMATIC.
3. THE DESIGN ADEQUACY AND SAFETY OF ERECTION BRACING, SHORING, TEMPORARY SUPPORTS, ETC. SHALL BE THE SOLE RESPONSIBILITY OF THE CONTRACTOR.
4. DO NOT SCALE DRAWINGS. FOLLOW DIMENSIONS SHOWN ON PLANS.
5. CONTRACTOR SHALL COORDINATE AND VERIFY ALL DIMENSIONS AND ELEVATIONS SHOWN HEREIN WITH ARCHITECTURAL PLANS, SECTIONS, AND DETAILS PRIOR TO CONSTRUCTION OR MATERIAL PURCHASE AND SHALL NOTIFY ARCHITECT OR ENGINEER IN WRITING OF DISCREPANCIES. SEE ARCHITECTURAL DRAWINGS FOR ALL DIMENSIONS AND ELEVATIONS NOT SHOWN HEREIN.
6. DIMENSIONS INDICATED RELATIVE TO AN EXISTING STRUCTURE ARE APPROXIMATE AND SHALL BE FIELD VERIFIED BY THE CONTRACTOR PRIOR TO CONSTRUCTION OR MATERIALS PURCHASE. CONTRACTOR SHALL NOTIFY ARCHITECT OR ENGINEER IN WRITING OF DISCREPANCIES.
7. SPECIFIED ANCHOR SYSTEMS SHALL BE INSTALLED IN STRICT ACCORDANCE WITH MANUFACTURER'S WRITTEN INSTRUCTIONS. SPECIAL ATTENTION SHALL BE GIVEN TO THE DRILLING, CLEANING, AND PREPARATION OF HOLES. WHERE ADHESIVE ANCHORS ARE SHOWN, SPECIAL ATTENTION SHALL BE GIVEN TO THE REQUIRED MIXING, APPLICATION, AND CURING TIME OF ADHESIVE TYPE SPECIFIED.

SUBGRADE PREPARATION
1. CONTRACTOR SHALL STRIP AND REMOVE ALL VEGETATION, TOPSOIL, ROOTS, AND ORGANIC SOILS FROM THE CONSTRUCTION AREA FOR A DISTANCE OF AT LEAST 10' BEYOND THE EXTENT OF BUILDING FOUNDATION LIMITS. THE DEPTH OF STRIPPING SHALL BE THAT REQUIRED TO REMOVE SIGNIFICANT ROOT ZONES, SMALL TREE STUMPS, AND OTHER UNACCEPTABLE MATERIALS, BUT IN NO CASE SHALL IT BE LESS THAN 12".
2. AFTER TOPSOILS, ETC. HAVE BEEN REMOVED FROM THE SITE WITHIN AND TO A POINT 10' OUTSIDE THE BUILDING CONSTRUCTION AREA, THE UPPER 24" OF EXPOSED SOILS SHALL BE COMPACTED TO A MINIMUM DENSITY OF 95% MODIFIED PROCTOR MAXIMUM DRY DENSITY (ASTM D1557) BY PROOFROLLING WITH A FULLY LOADED PNEUMATIC TIRED TANDEM AXLE DUMP TRUCK CAPABLE OF TRANSFERRING A LOAD OF 10 TO 20 TONS BY OVERLAPPING PASSES. A MINIMUM OF 8 COMPLETE PASSES SHALL BE MADE WITHIN THE BUILDING AREA.
3. PROOFROLLING SHALL BE PERFORMED UNDER THE OBSERVATION OF AN APPROVED TESTING LABORATORY SUPERVISED BY A GEOTECHNICAL ENGINEER. UNDERCUT, BACKFILL, AND COMPACT AREAS WHICH PUMP, DEFLECT, OR RUT EXCESSIVELY OR WHICH DO NOT STABILIZE AFTER SUCCESSIVE PASSES OF PROOFROLLING EQUIPMENT.
4. AFTER COMPLETION OF DENSIFICATION OF EXISTING SOILS, PLACE STRUCTURAL FILL FOR BUILDING AND PAVEMENT AREAS IN THIN (8" TO 10") LIFTS COMPACT TO A MINIMUM DENSITY OF 95% MODIFIED PROCTOR MAXIMUM DRY DENSITY (ASTM D1557). MATERIAL USED AS STRUCTURAL FILL SHALL BE NON-PLASTIC GRANULAR MATERIAL CONTAINING LESS THAN 15% FINES PASSING THROUGH THE NO. 200 SIEVE AND FREE OF ORGANICS, BOULDERS, OR OTHER DELETERIOUS MATERIALS.

FOUNDATIONS
1. ALL FOUNDATION FILL SUBGRADE SOILS SHALL BE COMPACTED AS FOLLOWS: (REF. ASTM D1557)
   A. 95% MODIFIED PROCTOR FOR GREATER THAN 18" BELOW FINAL FILL
   B. 98% MODIFIED PROCTOR FOR THE UPPER 18" BENEATH BUILDINGS AND PAVEMENTS.
2. SOILS TESTING LABORATORY SHALL CONDUCT COMPACTION TESTS IN ACCORDANCE WITH ASTM D6938. RATE OF COMPACTION SHALL BE AS FOLLOWS:
   A. ONE TEST FOR EACH SPREAD FOOTING;
   B. ONE TEST FOR EACH 50 LINEAR FEET OF CONTINUOUS FOOTING;
   C. ONE TEST FOR EACH 1000 S.F. OF SLAB.
3. FOUNDATIONS HAVE BEEN DESIGNED FOR 1,500 PSF MINIMUM ALLOWABLE SOIL BEARING PRESSURE.
4. REMOVE ALL WATER SOFTENED SOILS FROM FOOTING EXCAVATIONS PRIOR TO PLACING CONCRETE. FILL REMAINING VOIDS WITH ADDITIONAL CONCRETE.
5. SUPPORT ALL BOTTOM REINFORCEMENT IN FOUNDATION WITH STANDEES OR WHOLE CONCRETE BRICKS AT 48" O.C. MAX. REQUIRED CONCRETE COVER SHALL BE MAINTAINED AT ALL TIMES.
6. ALL FOOTING, PIER, AND OTHER FOUNDATION REINFORCING SHALL BE TIED IN PLACE PRIOR TO POURING CONCRETE.
7. WHERE FINISHED GRADES DIFFER ON OPPOSITE SIDES OF FOUNDATION WALLS, PROVIDE TEMPORARY BRACING. PREVENT LATERAL MOVEMENT UNTIL ALL ADJACENT FILLING, COMPACTION, FLOOR SLABS, AND FRAMING AT NEXT LEVEL OVER HAS BEEN COMPLETED.
8. UNLESS INDICATED ON FOUNDATION PLAN, VERTICAL STEPS IN FOOTINGS TO BE MAXIMUM 2'-0" VERTICAL SPACED NO LESS THAN 4'-0" O.C. HORIZONTALLY TO MAINTAIN MINIMUM 12" COVER BELOW FINISHED EARTH GRADE.
9. WHERE GRAVITY PLUMBING LINES OCCUR BELOW TOP OF WALL FOOTING, STEP FOOTING DOWN TO PROVIDE CLEARANCES INDICATED ON PLANS. COORDINATE WITH PLUMBING DRAWINGS FOR LOCATIONS, SIZES, AND INVERTS.
10. CONSTRUCTION JOINTS IN CONTINUOUS FOOTINGS TO BE FORMED VERTICALLY IN ACCORDANCE WITH FOUNDATION DETAILS IN PLANS.
11. PROVIDE 1/2" EXPANSION JOINT FILLER AROUND PERIMETER OF SLABS WHERE THEY ABUT VERTICAL SURFACES AND AT COLUMN ISOLATION JOINTS AS DETAILED.

SLAB ON GRADE
1. APPLY AN APPROVED CURING COMPOUND CONFORMING TO ASTM C309 AFTER FINISHING THE SLAB.
2. ALL WELDED WIRE FABRIC SHALL BE IN ACCORDANCE WITH ASTM A185. LAP ADJOINING PIECES AT LEAST ONE FULL MESH OR 8" MINIMUM. UNLESS OTHERWISE APPROVED, ALL WELDED WIRE FABRIC SHALL BE BLOCKED INTO POSITION INDICATED WITH PRECAST CONCRETE BLOCKS HAVING A COMPRESSIVE STRENGTH EQUAL TO THAT OF THE SLAB.
3. THE USE OF POLYPROPYLENE FIBERS (IN LIEU OF WELDED WIRE FABRIC) IS PROHIBITED WITHOUT THE WRITTEN AUTHORIZATION OF THE ENGINEER.
4. THE MAXIMUM SPACING OF JOINTS SHALL BE 15'-0" OR AS SHOWN ON PLANS.
5. ALL POROUS FILL MATERIAL SHALL BE A CLEAN GRANULAR MATERIAL WITH 100% PASSING 1 ½" SIEVE AND NO MORE THAN 5% PASSING A NO. 4 SIEVE. POROUS FILL SHALL BE COMPACTED TO 95% MODIFIED PROCTOR. DRY DENSITY PER ASTM D1557.
6. SLAB JOINTS SHALL BE FILLED WITH APPROVED MATERIAL. THIS SHOULD TAKE PLACE AS LATE AS POSSIBLE, PREFERABLY 4 TO 6 WEEKS AFTER THE SLAB HAS BEEN CAST. PRIOR TO FILLING, REMOVE ALL DEBRIS FROM THE SLAB JOINTS, THEN FILL IN ACCORDANCE WITH THE MANUFACTURER'S RECOMMENDATIONS.
7. SEE THE ARCHITECTURAL DRAWINGS FOR EXACT LOCATIONS OF DEPRESSED SLAB AREAS AND DRAINS. SLOPE SLAB TO DRAINS WHERE SHOWN.
8. THE FINISH TOLERANCE OF ALL SLABS SHALL BE IN ACCORDANCE WITH ACI 301, TYPE A.
9. WALKWAYS AND OTHER EXTERIOR SLABS ARE NOT INDICATED ON THE STRUCTURAL DRAWINGS. SEE THE SITE PLAN AND ARCHITECTURAL DRAWINGS FOR LOCATIONS, DIMENSIONS, ELEVATIONS, JOINTING DETAILS AND FINISH DETAILS.
10. CONTROL JOINT SEALANT SHALL BE SIKADUR 51 NS/SL OR APPROVED EQUAL. EXPANSION AND ISOLATION JOINT SEALANT SHALL BE SIKAFLEX 1a OR APPROVED EQUAL.

CAST-IN-PLACE REINFORCED CONCRETE
1. THE FOLLOWING ACI STANDARDS (LATEST EDITION) APPLY:
   A. ACI 318 - CODE
   B. ACI 315 - DETAILING
   C. ACI 301 - SPECIFICATIONS
   D. ACI 304 - PLACING
   E. ACI 347 - FORMWORK
   F. ACI 211.1 - MIX PROPORTIONING
   G. ACI 305 - HOT WEATHER CONCRETING
   H. ACI 306 - COLD WEATHER CONCRETING
2. ALL CONCRETE SHALL BE NORMAL WEIGHT CONCRETE (145 PCF) WITH MIXES MEETING THE FOLLOWING CRITERIA:

STRUCTURAL ELEMENT	28 DAY COMPRESSIVE STRENGTH
FOOTINGS, GRADE BEAMS & FOUNDATION WALLS	4,000 PSI
SLAB ON GRADE	3,000 PSI
ELEVATED SLABS & BEAMS	4,000 PSI
COLUMNS	4,000 PSI

3. SLUMP SHALL NOT EXCEED 5". SLUMP TESTS SHALL BE PERFORMED ON EACH TRUCK LOAD AND CONFORM TO ASTM C143.

REINFORCING STEEL
1. ALL REINFORCING STEEL SHALL BE ASTM A615, GRADE 60, UNLESS NOTED OTHERWISE.
2. ALL WELDED WIRE FABRIC SHALL BE ASTM A185, 70 KSI MINIMUM YIELD STRENGTH.
3. ADDITIONAL REINFORCING AND THAT QUANTITY OF REINFORCING OCCURRING AT OPENINGS SHALL BE PLACED EQUALLY EACH SIDE OF OPENINGS AS DETAILED.
4. HOOKS IN REINFORCING ARE IN ADDITION TO LENGTH SHOWN.
5. REINFORCING IS TO BE SUPPORTED IN FORMS AND SPACED WITH WIRE BAR SUPPORTS ACCORDING TO CRSI "PLACING REINFORCING BARS" UNLESS NOTED OTHERWISE.
6. MINIMUM REINFORCING STEEL CLEAR COVERS ARE AS FOLLOWS:
   A. CONCRETE CAST DIRECTLY AGAINST EARTH - 3"
   B. INTERIOR SLABS - 1"
   C. INTERIOR BEAMS AND COLUMNS - 1 1/2"
   D. EXTERIOR BEAMS AND COLUMNS - 2"
   E. EXTERIOR SLABS - 1 1/2"
7. UNLESS NOTED OTHERWISE, ALL BAR REINFORCING LAP SPLICES SHALL HAVE A MINIMUM LAP LENGTH OF 48 BAR DIAMETERS.

DIMENSIONAL LUMBER FRAMING
1. ALL STRUCTURAL LUMBER DESIGN SHALL CONFORM TO THE REQUIREMENTS OF THE NATIONAL DESIGNS SPECIFICATION FOR WOOD CONSTRUCTION (NDS-2018).
2. LOCATION, NUMBER, AND DIMENSIONS OF FRAMING MEMBERS SHOW GENERAL ARRANGEMENT ONLY. ACTUAL SPANS, SPACING, ETC. SHALL BE DETERMINED FROM ARCHITECTURAL DETAILS.
3. SEE ARCHITECTURAL PLANS AND DETAILS FOR EDGE SECTIONS, HEADER AND LINTEL LOCATIONS, AND ALL NON-STRUCTURAL FRAMING AND TRIM.
4. ALL WOOD FRAMING MATERIAL SHALL BE SURFACED DRY AND USED AT 19% MAXIMUM MOISTURE CONTENT. ALLOWABLE STRESS REQUIREMENTS OF ALL MATERIALS SHALL BE IN ACCORDANCE WITH THE "SCHEDULE OF REQUIRED STRESS VALUES".
5. ALL STUD AND WALL FRAMING SHALL BE NO. 2 GRADE SOUTHERN YELLOW PINE (SYP). "STUD" GRADE MATERIAL IS STRICTLY PROHIBITED FROM USE.
6. ALL JOIST, RAFTER & MISC. FRAMING SHALL BE NO. 2 GRADE, SOUTHERN YELLOW PINE. PROVIDE FULL-DEPTH BLOCKING AT ENDS. PROVIDE FULL-DEPTH (OR METAL) BRIDGING AT MIDSPAN AND AT A MAXIMUM SPACING OF 8'-0" O.C. IN BETWEEN.
7. ALL LUMBER EXPOSED TO EXTERIOR ENVIRONMENT OR IN CONTACT WITH MASONRY OR CONCRETE SHALL BE PRESSURE TREATED TO A MINIMUM RETENTION OF 0.25 lbs. OF ACQ PER CUBIC FOOT OF WOOD, AND EACH PIECE SHALL BEAR THE THIRD PARTY QUALITY MARK, "ABOVE GRADE USE". ALL LUMBER IN CONTACT WITH THE GROUND SHALL BE PRESSURE TREATED TO A MINIMUM RETENTION OF 0.40 lbs. OF ACQ PER CUBIC FOOT OF WOOD, AND EACH PIECE SHALL BEAR THE THIRD PARTY QUALITY MARK, "GROUND CONTACT USE". REFERENCE STANDARD AWPA C2 AND ASTM D1760 FOR PRESSURE TREATMENT OF TIMBER PRODUCTS.
8. WHERE POSSIBLE ALL CUTS AND HOLES SHOULD BE COMPLETED BEFORE TREATMENT. CUTS AND HOLES DUE TO ON-SITE FABRICATION SHALL BE BRUSHED WITH 2 COATS OF COPPER NAPHTHENATE SOLUTION CONTAINING A MINIMUM OF 2% METALLIC COPPER IN SOLUTION (PER AWPS STD. M4).
9. THE CONTRACTOR SHALL CAREFULLY SELECT LUMBER TO BE USED IN LOAD BEARING APPLICATIONS. THE LENGTH OF SPLIT ON THE WIDE FACE OF 2" NOMINAL LOAD BEARING FRAMING SHALL BE LIMITED TO LESS THAN ½ OF THE WIDE FACE DIMENSION. THE LENGTH OF SPLIT ON THE WIDE FACE OF 3" (NOMINAL) AND THICKER LUMBER SHALL BE LIMITED TO HALF OF THE NARROW FACE DIMENSIONS.
10. ALL WOOD JOISTS AND HEADERS WHICH FRAME INTO BEAMS SHALL BE SUPPORTED BY SIMPSON LUS HANGERS WITH THE SAME WIDTH AND DEPTH OF THE MEMBER, U.N.O. USE HANGERS WITH CONCEALED FLANGES WHERE THE CONNECTOR CANNOT BE HIDDEN BY WOOD TRIM OR THE SUPPORT MEMBER IS WIDER THAN THE STANDARD FLANGE.
11. PROVIDE NAILING PATTERN IN COMPLIANCE WITH IBC RECOMMENDED FASTENING SCHEDULE.
12. LOAD BEARING STUD WALLS SHALL BE CONTINUOUSLY BRIDGED AT MID-HEIGHT AND UNSUPPORTED PLYWOOD WALL SHEATHING JOINTS WITH SOLID WOOD BLOCKING, U.N.O.
13. NO CUTS, HOLES, OR COPES IN STRUCTURAL WOOD FRAMING SHALL BE PERMITTED WITHOUT PRIOR REVIEW AND APPROVAL BY THE STRUCTURAL ENGINEER AND ARCHITECT.
14. PROVIDE FULL-DEPTH BLOCKING AT ENDS OF RAFTERS AND JOISTS. PROVIDE FULL-DEPTH (OR METAL) BRIDGING AT MIDSPAN AND AT A MAXIMUM SPACING OF 8'-0" O.C. IN BETWEEN.
15. STRUCTURAL STEEL PLATE CONNECTORS SHALL CONFORM TO ASTM A36 SPECIFICATIONS AND BE ¼" THICK UNLESS OTHERWISE INDICATED. BOLTS CONNECTING WOOD MEMBERS SHALL BE PER ASTM A307 AND BE ¾" DIAMETER UNLESS OTHERWISE INDICATED. PROVIDE WASHERS FOR ALL BOLT HEADS AND NUTS IN CONTACT WITH WOOD SURFACES.
16. BOLT HOLES SHALL BE CAREFULLY CENTERED AND DRILLED NOT MORE THAN 1/16" LARGER THAN THE BOLT DIAMETER. BOLTED CONNECTIONS SHALL BE SNUG TIGHT BUT NOT TO THE EXTENT OF CRUSHING WOOD UNDER WASHERS.
17. HOLES AND NOTCHES DRILLED OR CUT INTO WOOD FRAMING SHALL NOT EXCEED THE REQUIREMENTS OF IBC, SECTION 23.
18. ALL PLATES, ANCHORS, NAILS, BOLTS, NUTS, WASHERS, AND OTHER MISCELLANEOUS HARDWARE INSTALLED IN PRESSURE TREATED LUMBER, SHALL BE HOT DIP GALVANIZED.
19. ADEQUATE BRACING SHALL BE PROVIDED UNTIL PERMANENT BRACING AND/OR DIAPHRAGMS ARE INSTALLED.
20. OVERLAP ALL TOP PLATES AT CORNERS.
21. JOINTS IN THE DOUBLE TOP PLATES OF WALLS SHALL BE OFFSET A MINIMUM LAP LENGTH OF 4'-0" & NAILED WITH NOT LESS THAN (15)-16d FACE NAILS ON EACH SIDE OF THE JOINT.
22. ALL BEAMS SHALL HAVE LATERAL SUPPORT AT THE COMPRESSION EDGE AT A MAXIMUM OF 24" O.C. AND AT BEARING POINTS, WITH A MINIMUM BEARING LENGTH OF 3 1/2".
23. PROVIDE DOUBLE JOISTS OR SOLID BLOCKING AT 24" O.C. UNDER ALL PARTITIONS AND TO SUPPORT CONCENTRATED LOADS FROM FRAMING ABOVE UNLESS NOTED OTHERWISE.
24. PROVIDE DOUBLE HEADER BEAMS OF THE SAME SIZE AS JOISTS OR RAFTERS TO FRAME AROUND OPENINGS IN PLYWOOD DECK UNLESS OTHERWISE INDICATED.
25. PROVIDE DOUBLE LAYER PLYWOOD UNDER ALL CERAMIC OR STONE TILE FLOORS.
26. PROVIDE HEADERS, BRIDGING, CONNECTORS, BLOCKING, TRIMMERS, ETC. AS REQUIRED AND RECOMMENDED BY AITC TIMBER CONSTRUCTION STANDARDS AND 2021 SCBC U.N.O.
27. WOOD FRAMING MATERIALS:
   A. ALL DIMENSIONAL LUMBER SHALL BE #2 SYP KD OR BETTER AND PROVIDE NOT LESS THAN THE FOLLOWING ALLOWABLE STRESSES:
      F_b = 1,000 PSI
      F_t = 600 PSI
      E = 1,400,000 PSI
      F_c = 1,400 PSI
      F_{cp} = 565 PSI
   B. SHEATHING:
      WALLS.....APA RATED SHEATHING, EXPOSURE 1 OR EXTERIOR;
      ROOF.....APA RATED SHEATHING, EXPOSURE1, 2, OR EXTERIOR;
      FLOOR.....APA RATED STURD-I-FLOOR;
   C. ALL BOLTS SHALL BE ASTM A307 WITH WASHERS, GALVANIZED;
   D. NAILS IN ACCORDANCE WITH MINIMUM NAILING REQUIREMENTS OF SCBC EXCEPT WHERE NOTED IN DETAILS OR SPECIFICATIONS. ALL NAILS TO BE GALVANIZED.

PLYWOOD / GYPBOARD SHEATHING
1. ALL PLYWOOD CONSTRUCTION SHALL BE IN ACCORDANCE WITH THE AMERICAN PLYWOOD ASSOCIATION (APA) SPECIFICATIONS.
2. ALL ROOF PANEL SHEATHING SHALL BE PER PLAN. SUITABLE EDGE SUPPORT SHALL BE PROVIDED BY THE USE OF PANEL CLIPS OR BLOCKING BETWEEN FRAMING.
3. ALL FLOOR SHEATHING SHALL BE TONGUE & GROOVE PER PLAN. FIELD-GLUE USING ADHESIVES MEETING APA SPECIFICATIONS AFG-01, APPLIED IN ACCORDANCE WITH MANUFACTURER'S RECOMMENDATIONS.
4. ALL WALL PANEL SHEATHING SHALL BE PER PLAN.
5. INSTALL ALL PLYWOOD SHEATHING AT FLOOR AND ROOF WITH THE LONG DIMENSIONS OF THE PANEL ACROSS SUPPORTS AND WITH PANEL CONTINUOUS OVER TWO OR MORE SPANS. STAGGER PANEL END JOINTS. ALLOW 1/8" SPACING AT PANEL ENDS AND EDGES UNLESS OTHERWISE RECOMMENDED BY THE SHEATHING MANUFACTURER.
6. ALL NAILS SHALL NOT BE OVERDRIVEN.
7. ALL EXISTING WALLS SHALL BE SHEATHED PER PLAN.
8. PROVIDE BLOCKING AT UNSUPPORTED PANEL EDGES AS FOLLOWS:
   ROOFS AND FLOORS - ONLY WHERE INDICATED ON PLAN
   WALLS - FULLY BLOCKED
9. WHERE EITHER 2" OR 2½" FASTENER SPACINGS ARE USED FOR WOOD STRUCTURAL PANELS USED AT ROOF OR FLOOR, THE FRAMING MEMBER AT THE ADJOINING PANEL SHALL BE 3" NOMINAL WIDTH AND THE NAILS AT PANEL EDGES SHALL BE STAGGERED IN TWO LINES.
10. ALL PLYWOOD AND SHEATHING SHALL BE APA RATED, BEAR THE STAMP OF AN APPROVED TESTING AGENCY, AND SHALL BE FABRICATED WITH EXTERIOR GLUE. NAILS AT ABUTTING PLYWOOD EDGES MUST PENETRATE THE SAME PIECE OF FRAMING OR BLOCKING.
11. PERIMETER OF ANY OPENINGS SHALL BE FASTENED AS BOUNDARY NAILING.
12. OPENINGS WITH A DIMENSION PERPENDICULAR TO THE JOISTS GREATER THAN 4'-0" SHALL BE BLOCKED BEYOND THE HEADERS, AND METAL TIES NOT LESS THAN 16 GAGE BY 1½" WIDE WITH (8)-16d COMMON NAILS ON EACH SIDE OF THE HEADER-JOIST INTERSECTION SHALL BE PROVIDED.
13. AT SHEAR WALLS OR DRAG STRUTS, THE PLYWOOD DIAPHRAGM MUST BE NAILED TO TOP PLATES, MEMBERS, BLOCKING, ETC. AS FOLLOWS:
   EXTERIOR WALLS/ DIAPHRAGM EDGES: 1x BOUNDARY NAILING
   INTERIOR WALL LINES: 2x BOUNDARY NAILING

STRUCTURAL DESIGN CRITERIA

1. BUILDING CODE:
   2021 SOUTH CAROLINA BUILDING CODE (SCBC)
2. GRAVITY LOADS (ASCE 7-16):

	DISTRIBUTED
ROOF	LL = 20 PSF DL = 15 PSF
1ST FLOOR	LL = 100 PSF DL = 50 PSF
COLLATERAL LOAD	CL = 5 PSF

3. WIND LOADS (ASCE 7-16/ 2021 SCBC):
   BASIC DESIGN WIND SPEED, V = 145mph
   ALLOWABLE STRESS DESIGN WIND SPEED, V_{ASD} = 112mph
   RISK CATEGORY II
   WIND EXPOSURE D
   INTERNAL PRESSURE COEFFICIENT, GC^pi = ±0.00
4. SEISMIC LOADS (ASCE 7-16/ 2021 SCBC):
   RISK CATEGORY II
   SEISMIC IMPORTANCE FACTOR, I_e = 1.00
   MAPPED SPECTRAL RESPONSE ACCELERATION PARAMETERS:
   S_s = 0.421g; S_1 = 0.142g
   SITE CLASS D
   DESIGN SPECTRAL RESPONSE ACCELERATION PARAMETERS:
   S_{DS} = 0.411g; S_{D1} = 0.220g
   SEISMIC DESIGN CATEGORY D
   BASIC SEISMIC FORCE-RESISTING SYSTEM:
   TIMBER FRAME
   DESIGN BASE SHEAR:
   V = CsW
   W = EFFECTIVE SEISMIC MASS
   SEISMIC RESPONSE COEFFICIENT, C_S = 0.282
   RESPONSE MODIFICATION FACTOR, R = 1.5
   ANALYSIS PROCEDURE:
   EQUIVALENT LATERAL FORCE METHOD
5. SNOW LOAD (ASCE 7-16):
   GROUND SNOW LOAD Pg = 0 PSF
6. RAIN LOAD DATA 2021 SCBC:
   RAIN INTENSITY i = 4.5 in/hr

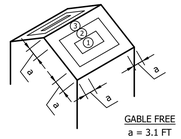

GABLE FREE
a = 3.1 FT

COMPONENTS & CLADDING
WIND PRESSURES (PSF)

	ZONE	AREA(SF)	+P	-P	ASD +P	ASD -P
ROOF: 7 TO 45 DEGREES	1	10	18.9	61.1	11.34	36.66
	1	20	18.9	61.1	11.34	36.66
	1	50	18.9	61.1	11.34	36.66
	1	100	18.9	61.1	11.34	36.66
	2	10	30.3	91.9	18.18	55.14
	2	20	30.3	91.9	18.18	55.14
	2	50	18.9	61.1	11.34	36.66
	2	100	18.9	61.1	11.34	36.66
	3	10	30.3	91.9	18.18	55.14
	3	20	30.3	91.9	18.18	55.14
	3	50	18.9	61.1	11.34	36.66
	3	100	18.9	61.1	11.34	36.66

SOUTH CAROLINA
SHEARLOCK ENGINEERING, LLC
No. 7089
CERTIFICATE OF AUTHORIZATION

PRELIMINARY
NOT FOR CONSTRUCTION

SHEARLOCK ENGINEERING
STRUCTURAL DESIGN CONSULTANTS

REV. No.	DATE	NARRATIVE
0	00-00-2025	ISSUED FOR PERMIT

BLACK MARLIN OUTDOOR BAR
86 HELMSMAN WAY
HILTON HEAD ISLAND, SC 29928

DATE 11-17-2025
PROJECT No. 25-478
SHEET TITLE
STRUCTURAL NOTES
SHEET No. S1.0

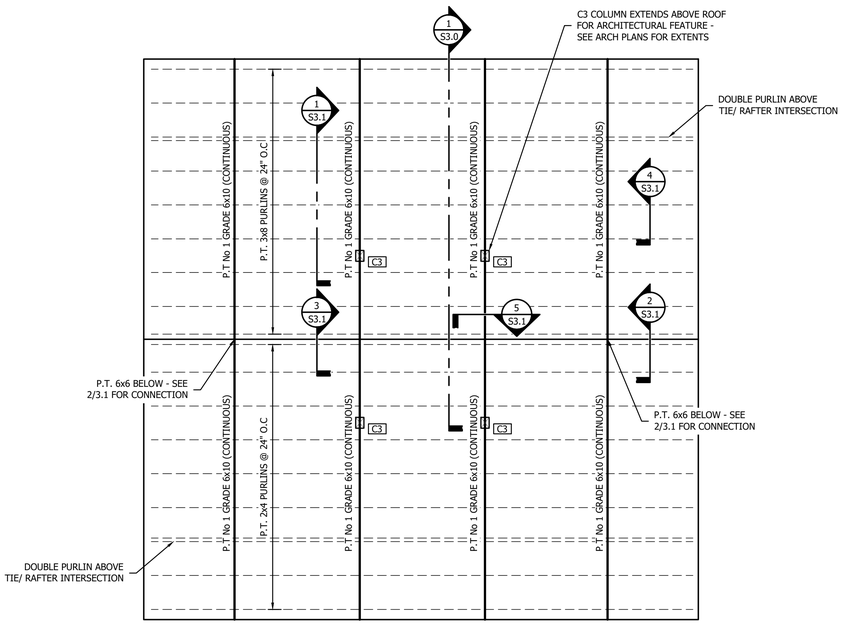

NOTE: SEE 2/S2.0 AND DETAILS FOR SUPPORTING COLUMN LOCATIONS AND RAFTER CONNECTIONS.

3 S2.0 **ROOF FRAMING PLAN**
SCALE: 1/4" - 1'-0"

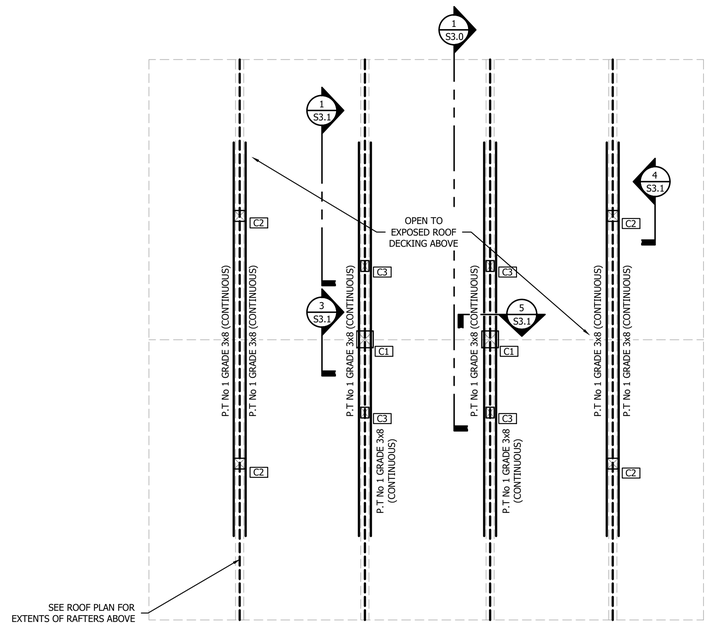

NOTE:
C1 COLUMNS ARE CONTINUOUS TO 'RIDGE' ELEVATION.
C2 COLUMNS TERMINATE BELOW RAFTER.
C3 COLUMNS EXTEND THROUGH ROOF.

2 S2.0 **BEAM/ CEILING FRAMING PLAN**
SCALE: 1/4" - 1'-0"

GENERAL LEGEND

- COLUMN FOOTING
- F1 - FOOTING MARK - SEE FOOTING SCHEDULE
- C1 - COLUMN MARK - SEE COLUMN SCHEDULE
- CONTROL JOINT (C.J.)
- THICKENED SLAB

FOUNDATION NOTES:

1. CONTRACTOR SHALL COORDINATE ALL FLOOR DRAIN SIZES AND LOCATIONS WITH ARCHITECTURAL PLANS.
2. AT FLOOR DRAINS, SLOPE FLOOR ½" FOR 2'-0"Ø AREA CENTERED ON DRAIN. (SEE PLUMBING DRAWINGS) TOP OF DRAIN COVER SHALL BE FLUSH WITH ADJACENT FLOOR FINISH MATERIAL. WHEN LOCATED IN CERAMIC TILE FLOOR, GROUT AREA BETWEEN CERAMIC TILE AND EDGE OF DRAIN. MAINTAIN SLAB THICKNESS AT ALL SLOPES AND DEPRESSIONS.

FRAMING NOTES:

1. MINIMUM SYP #2 2X6 T&G DECKING SPANNING OVER (3) TRUSSES (MIN.).

   NAILING PATTERN:
   SUPPORTED EDGES & DIAPHRAGM BOUNDARIES: (3) 16D NAILS
   FIELD & INTERMEDIATE SUPPORTS. (2) 16D NAILS
2. KNEE WALLS: FRAMED W/ P.T. 2x4 @ 16" O.C. - U.N.O.
3. KNEE WALL SHEATHING: 1/2" PRESSURE TREATED PLYWOOD FASTENED W/ GALVANIZED 8d BOX NAILS (0.113"Ø x2.5" LONG) AS FOLLOWS:
   NAILING PATTERN:
   SUPPORTED EDGES & DIAPHRAGM BOUNDARIES: 4" O.C.
   FIELD & INTERMEDIATE SUPPORTS. 12" O.C.

ANCHOR BOLT NOTES:

1. PROVIDE 5/8"Ø x10" LONG ANCHOR BOLTS W/ 2"x2"x¼" THICK WASHER SPACED AT 48" O.C. ALONG WALL SILL PLATE AT ALL EXTERIOR WALLS & AS INDICATED - U.N.O. PROVIDE (2) BOLTS (MIN.) PER PIECE & 12" (MAX.) FROM EACH END OF PIECE.

COLUMN SCHEDULE	
MARK	COLUMN TYPE
C1	P.T. 12x12
C2	P.T. 8x8
C3	P.T. 6x8

FOOTING SCHEDULE					
MARK	W	L	T	'A' BARS	'B' BARS
F1	5'-6"	5'-6"	1'-6"	(8)-#5 TOP (8)-#5 BOTT	(8)-#5 TOP (8)-#5 BOTT
F2	5'-0"	5'-0"	1'-4"	(7)-#5 TOP (7)-#5 BOTT	(7)-#5 TOP (7)-#5 BOTT

F.F.E. = SEE ARCH.

4" CONCRETE SLAB ON GRADE W/ 6x6-W2.1xW2.1 WWF (TYP)

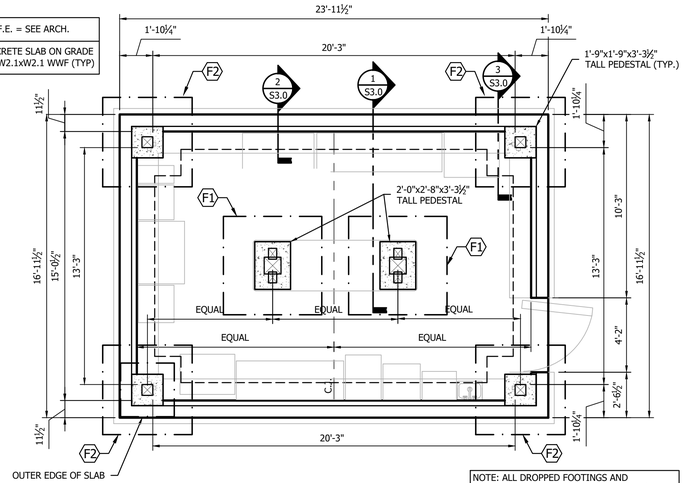

NOTE: ALL DROPPED FOOTINGS AND PEDESTALS TO BE CAST W/ 4000psi CONCRETE.

NOTE: SEE ARCH./ CIVIL PLANS FOR SITE PLACEMENT OF PROPOSED STRUCTURE.

1 S2.0 **FOUNDATION PLAN**
SCALE: 1/4" - 1'-0"

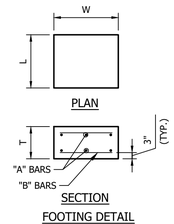

SOUTH CAROLINA CERTIFICATE OF AUTHORIZATION
SHEARLOCK ENGINEERING, LLC No. 7089

PRELIMINARY NOT FOR CONSTRUCTION

SHEARLOCK ENGINEERING
STRUCTURAL DESIGN CONSULTANTS

REV. No.	DATE	NARRATIVE
0	00-00-2025	ISSUED FOR PERMIT

BLACK MARLIN OUTDOOR BAR
86 HELMSMAN WAY
HILTON HEAD ISLAND, SC 29928

DATE 11-17-2025
PROJECT No. 25-478
SHEET TITLE
FOUNDATION, BEAM/ CEILING & ROOF FRAMING PLANS
SHEET No. S2.0

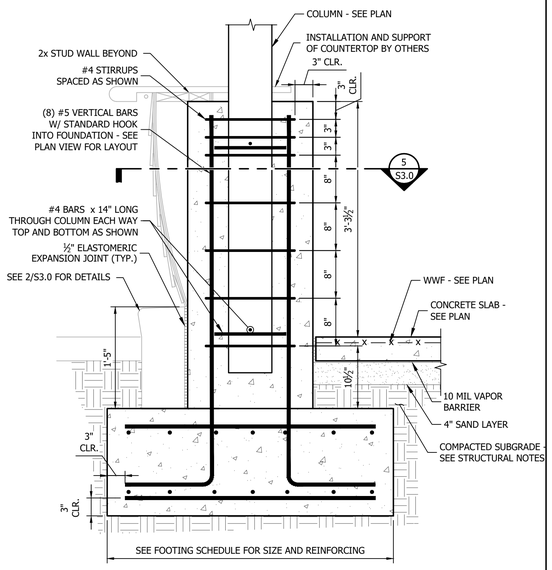

3 S3.0 FOUNDATION DETAIL AT CORNER PEDESTALS
NOT TO SCALE

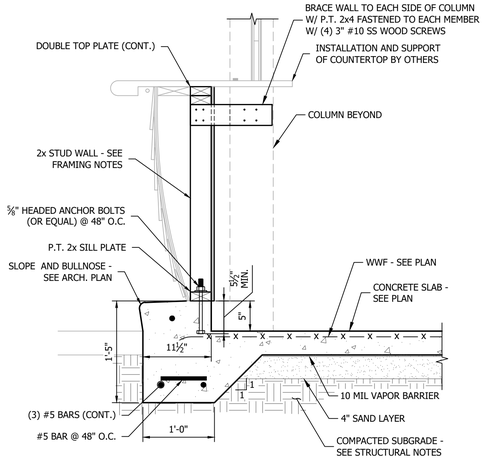

2 S3.0 TYPICAL FOUNDATION TURNDOWN/ CURB
NOT TO SCALE

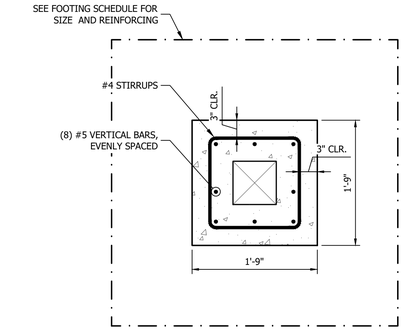

5 S3.0 PLAN VIEW AT CORNER PEDESTALS
NOT TO SCALE

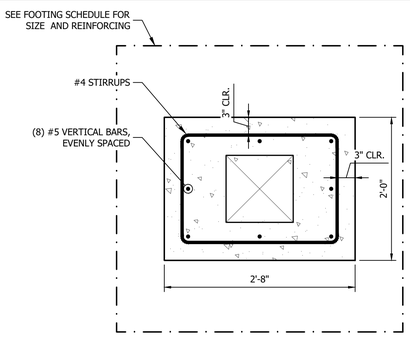

6 S3.0 PLAN VIEW AT CENTER PEDESTALS
NOT TO SCALE

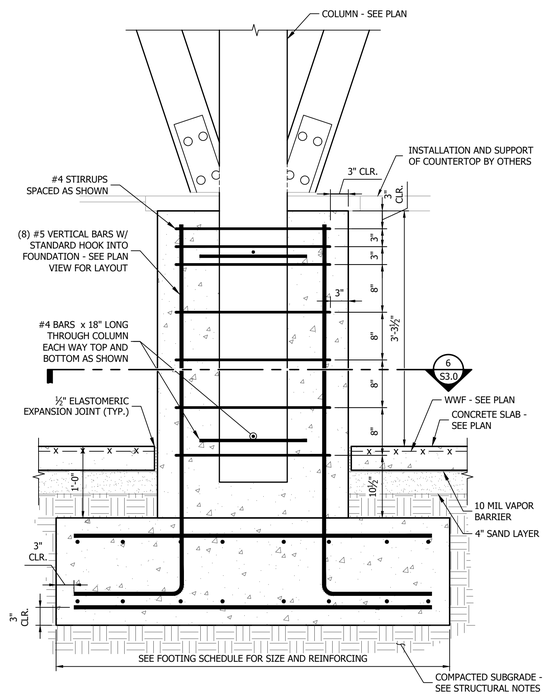

4 S3.0 FOUNDATION DETAIL AT CENTER PEDESTALS
NOT TO SCALE

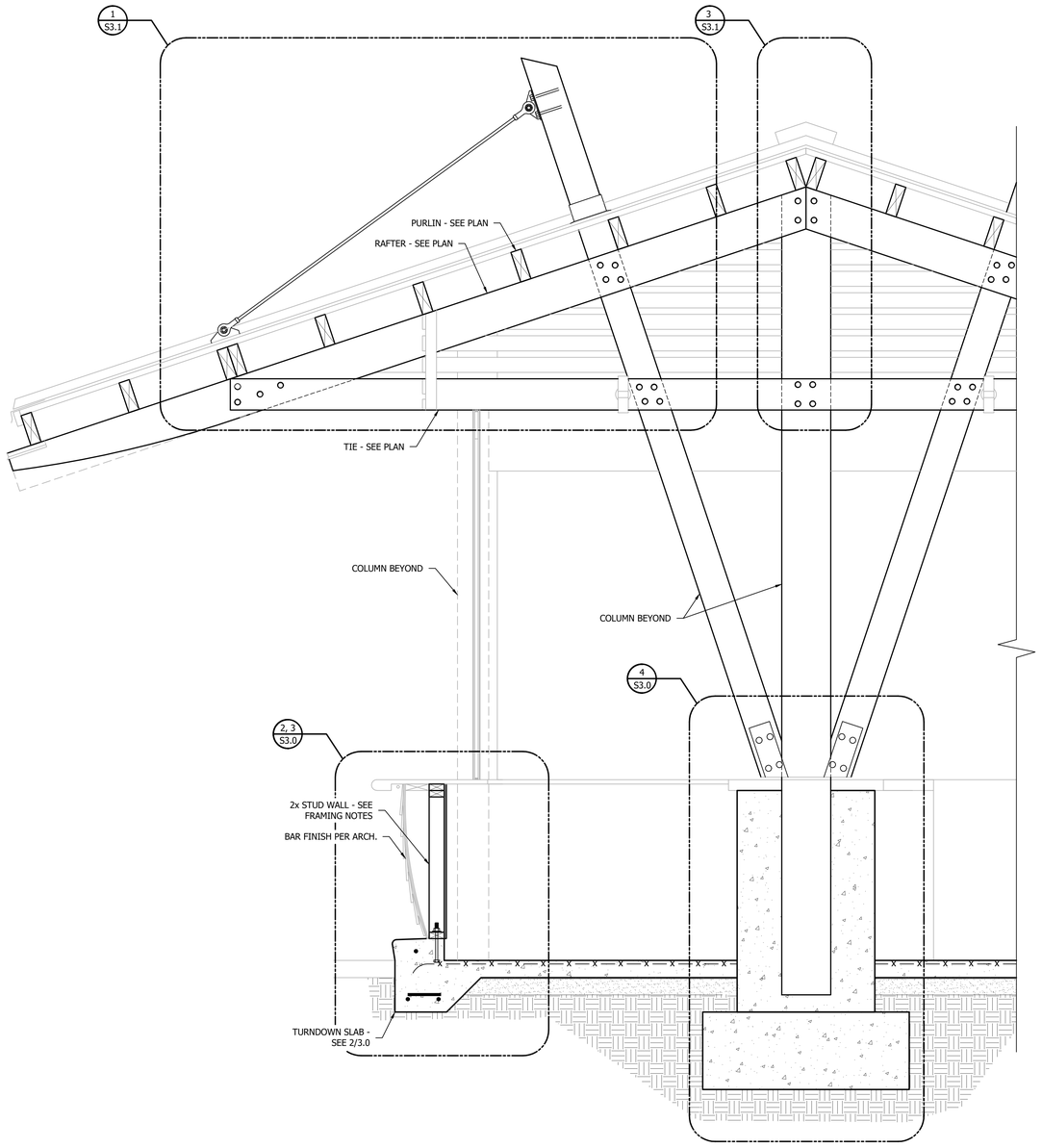

1 S3.0 TYPICAL BAR SECTION
NOT TO SCALE

SOUTH CAROLINA
SHEARLOCK ENGINEERING, LLC
No. 7089
CERTIFICATE OF AUTHORIZATION

PRELIMINARY
NOT FOR CONSTRUCTION

SHEARLOCK ENGINEERING
STRUCTURAL DESIGN CONSULTANTS

REV. No.	DATE	NARRATIVE
0	00-00-2025	ISSUED FOR PERMIT

BLACK MARLIN OUTDOOR BAR
86 HELMSMAN WAY
HILTON HEAD ISLAND, SC 29928

DATE 11-17-2025
PROJECT No. 25-478
SHEET TITLE
FOUNDATION DETAILS
SHEET No. S3.0

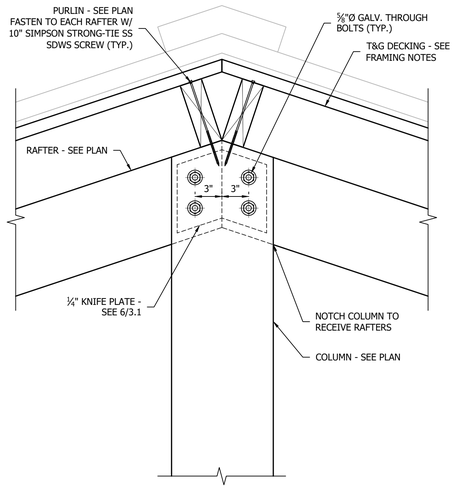

3 S3.1 RAFTER CONNECTION AT CENTER COLUMN
NOT TO SCALE

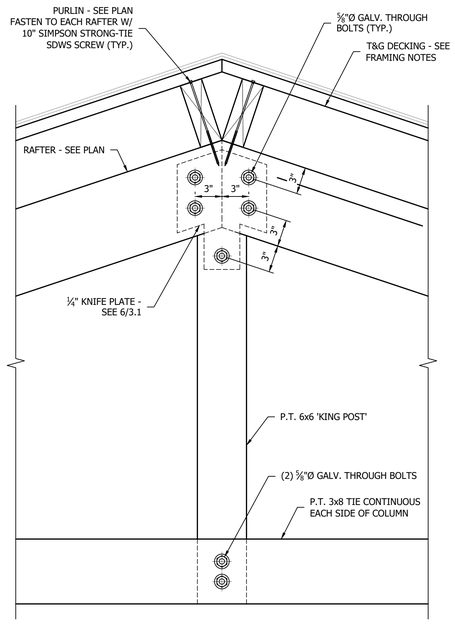

2 S3.1 RAFTER CONNECTION AT GABLE END
NOT TO SCALE

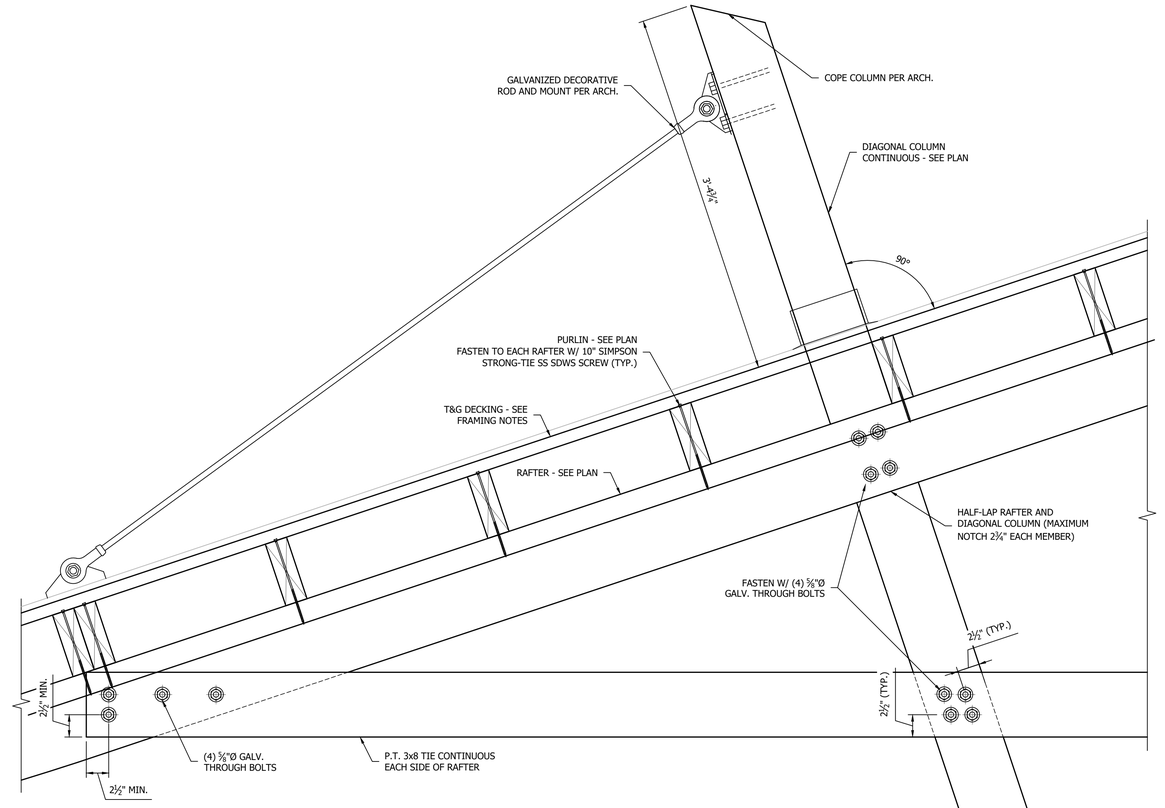

1 S3.1 SECTION
NOT TO SCALE

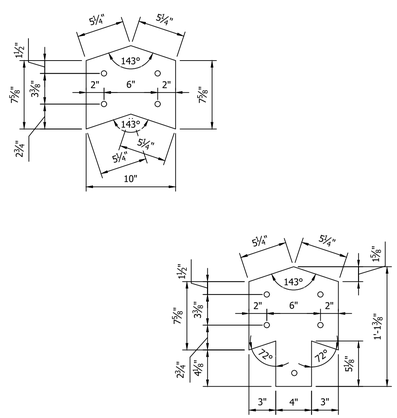

6 S3.1 KNIFE PLATE DETAILS
NOT TO SCALE

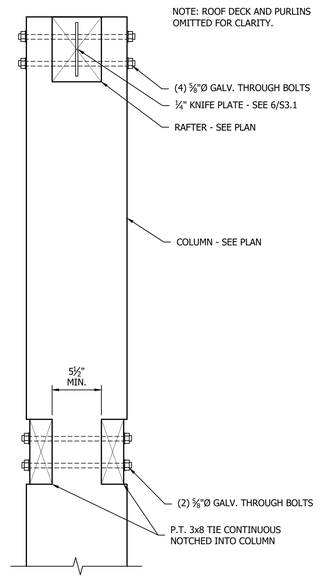

5 S3.1 DETAIL AT CENTER COLUMN
NOT TO SCALE

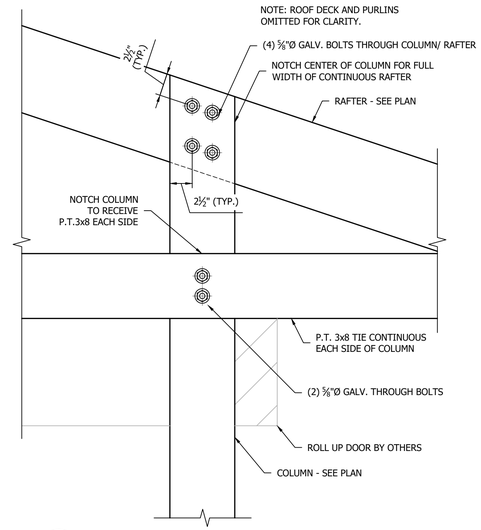

4 S3.1 RAFTER CONNECTION AT C2 COLUMN
NOT TO SCALE

SOUTH CAROLINA
CERTIFICATE OF AUTHORIZATION
SHEARLOCK ENGINEERING, LLC
No. 7089

PRELIMINARY
NOT FOR CONSTRUCTION

SHEARLOCK ENGINEERING
STRUCTURAL DESIGN CONSULTANTS

REV. No.	DATE	NARRATIVE
0	00-00-2025	ISSUED FOR PERMIT

BLACK MARLIN OUTDOOR BAR
86 HELMSMAN WAY
HILTON HEAD ISLAND, SC 29928

DATE 11-17-2025
PROJECT No. 25-478
SHEET TITLE
FOUNDATION DETAILS
SHEET No. S3.1

WAC LIGHTING

Fixture Type:

Catalog Number:

Project:

Location:

Tube

Single & Double Wall Mount 3000K

Model & Size	*Color Temp & CRI*	*Watt*	*Lumens*	*Finish*
❍ WS-W2604 Double	❍ 3000K 90	30W	1750	❍ AL Brushed Aluminum
◉ WS-W2605 Single	◉ 3000K 90	16W	800	◉ BK Black ◉ BZ Bronze ◉ GH Graphite ◉ WT White

Example: **WS-W2604-AL**



DESCRIPTION

A simple sconce with endless possibilities. This cylindrical wall luminaire delivers powerful lumen output, either upwards or downwards, or a combination of both, depending on the configuration and application. Built to last with die-cast aluminum construction and designed with no visible hardware, this low profile highly versatile Tube is perfect for your exterior and interior lighting needs. Five handsome architectural finishes will complement nearly any dcor.

FEATURES

- Title 24 may not be availble for all finishes, check for availability
- 2605 Single, 2604 Double
- Driver concealed within the fixture
- 5 year warranty

SPECIFICATIONS

Construction:	Die-cast Aluminum
Power:	30W, 16W
Input:	120-277 VAC, 50/60Hz
Dimming:	ELV: 100-15%, 0-10V: 100-10%
Light Source:	Integrated LED
Rated Life:	70000 Hours
Mounting:	Mounts directly to junction box, Can be mounted on wall in all orientations
Finish:	Electrostatically Powder Coated White, Black, Bronze, Brushed Aluminum, Graphite
Operating Temp:	-40°F to 122°F (-40°C to 50°C)
Standards:	ETL, cETL, Wet Location Listed, IP65, Title 24 JA8-2016 Compliant, Title 24:

FINISHES



LINE DRAWING

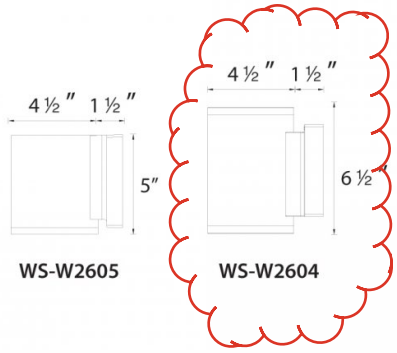

WAC Lighting retains the right to modify the design of our products at any time as part of the company's continuous improvement program. May 2020

Proudly assembled in America

minkaAire



Image File Name: **F753-KA.jpg**

Java - 54" Ceiling Fan

Item #:	F753-KA
UPC Code:	706411042614
Collection:	Java
Category:	EXTERIOR FAN
Product Type:	Ceiling Fan
Descriptive Finish 1:	Kocoa
UL Certificate:	E75795

Bond Compatible

Wet Location

Title 17

UL Listed

MEASUREMENTS

Length:	54
Width:	54
Height:	14.75
Product Weight:	16.18
Ceiling to Blade:	13.25
Ceiling to Lowest Point:	14.75
Downrod Included:	Yes
Downrod Length 1:	6.0
Downrod Width 1:	0.75
Wire Length:	80
Blade Material:	PC
Slope:	Yes
Reversible Rotation:	Yes
Number of Blades:	3
Blade Pitch:	14
Blade Sweep:	54
Reversible Blades:	No
Motor Size:	AC 153 X 18mm
Motor Type:	AC

	Low	L/M	Medium	M/H	High
RPM	86				157
Amps	220.0				0.372
Watts	15.3				44.68
CFM	2782.0				5357.0
CFM/Watts	181.83				119.9

LAMPING

LED:	No
Bulb Type 1:	N/A
Bulb Included:	No
Dimmable:	No
Light Kit Compatible:	No
Light Kit Included:	No

CONTROLS

Pull Chain Control:	No
Remote Included:	Yes
Remote Control SKU:	RCS213
Wall Control Included:	No
Compatible Wall Controls:	WCS213
Integrated Smart Control:	No
Compatible Smart Control:	BD-1000

GLASS

Shade Finish:	NOT APPLICABLE

SHIPPING

Case Pack:	1
Ship Length:	28.25
Ship Width:	10.0
Ship Height:	10.5
Ship Weight:	18.458
Ship Volume:	1.717
Small Parcel:	Yes

⚠ WARNING: Handling this product can expose you to chemicals including lead, which is known to the State of California to cause cancer and birth defects or other reproductive harm. Wash hands with soap and water after installing, handling, cleaning or otherwise touching this product. For more information go to: www.P65Warnings.ca.gov.

For additional information, please contact Customer Care: 1-800-221-7977 | Product depicted on this spec sheet is protected by United States Federal and/or State laws including US Patent, Trademark and/or Copyright and unfair competition laws. Unauthorized reproduction or use carries severe legal penalties.



WD3 - Dual Element 3000 Watt Electric Patio Heater by Infratech

Specs	
Family/Collection:	WD-Series
Length:	33"
Width/Diameter (in):	8.19"
Height:	8.19"
Depth/Extension:	6"
Weight:	14 lbs
Heating Area:	49 Sq. Ft.
Fuel Source:	Electric
Infrared Heat Technology:	Medium Wave
Minimum Mounting Height:	84"
Maximum Mounting Height:	96"
Installation Sheet:	https://images.belamiecommerce.com/supplier/infratech/specsheets/w_series_install_sheet.pdf
Standard Wattage:	3000 Watts
Finish:	Stainless Steel, Almond, Beige, Biscuit, Black, Bronze, Copper, Grey, White
Installation Options:	Wall Ceiling
Voltage Rating:	208 V, 240 V, 277 V, 480 V
Amperage:	6.25 amps, 14.42 amps, 10.83 amps, 12.5 amps
Material:	Steel
Can be Recessed:	Yes
Mounting Options:	Post Mount, Recessed, Wall Mount
IPX Rating:	IPX4
Application:	Commercial/Residential
Warranty:	3 Years
Made In:	USA
Mounting Brackets Included:	Yes

Black Marlin Hurricane Bar
86 Helmsman Way
Final - Staff Comments
December 9, 2025
DRB-001113-2025

DESIGN TEAM/DRB COMMENT SHEET

The comments below are staff recommendations to the Design Review Board (DRB) and do NOT constitute DRB approval or denial.

PROJECT NAME: 86 Helmsman Way Palmetto – Black Marlin Hurricane Bar DRB-001113-2025

DATE: 12/09/2025 CATEGORY: Final

RECOMMENDATION: Approval ☐ Approval with Conditions ☒ Denial ☐

APPLICATION MATERIAL

DRB REQUIREMENTS	Complies Yes	No	Not Applicable	Comments or Conditions
Demolition Plan if needed	☒	☐	☐	
Existing Conditions match As-Built	☒	☐	☐	
Dimensioned Details and of Sections	☒	☐	☐	
Detail Illustrating Connection to Existing Structure	☒	☐	☐	
New Building Details Match Existing Building Details	☐	☐	☒	

ARCHITECTURAL DESIGN

DESIGN GUIDE/LMO CRITERIA	Complies Yes	No	Not Applicable	Comments or Conditions
Structure is designed to be appropriate to the neighborhood	☒	☐	☐	
Promotes pedestrian scale and circulation	☒	☐	☐	
Design is unobtrusive and set into the natural environment	☒	☐	☐	
Utilizes natural materials and colors	☒	☐	☐	
Avoids distinctive vernacular styles	☒	☐	☐	
Design is appropriate for its use	☒	☐	☐	
All facades shall have equal design characteristics	☐	☐	☒	

Avoids monotonous planes or unrelieved repetition	☒	☐	☐	
Has a strong roof form with enough variety to provide visual interest	☐	☐	☒	
Overhangs are sufficient for the façade height.	☐	☐	☒	
Forms and details are sufficient to reduce the mass of the structure	☒	☐	☐	
Human scale is achieved by the use of proper proportions and architectural elements	☒	☐	☐	
Utilizes a variety of materials, textures and colors	☒	☐	☐	
Incorporates wood or wood simulating materials	☒	☐	☐	
Windows are in proportion to the facade	☐	☐	☒	
Details are clean, simple and appropriate while avoiding excessive ornamentation	☒	☐	☐	
Utilities and equipment are concealed from view	☐	☐	☒	
Decorative lighting is limited and low wattage and adds to the visual character	☒	☐	☐	
Accessory elements are designed to coordinate with the primary structure	☒	☐	☐	

LANDSCAPE DESIGN

DESIGN GUIDE/LMO CRITERIA	Complies Yes	No	Not Applicable	Comments or Conditions
Treats the Landscape as a major element of the project	☒	☐	☐	
Provides Landscaping of a scope and size that is in proportion to the scale of the development	☒	☐	☐	
Landscape is designed so that it may be maintained in its natural shape and size	☒	☐	☐	
Preserves a variety of existing native trees and shrubs	☒	☐	☐	
Provides for a harmonious setting for the site's structures, parking areas or other construction	☒	☐	☐	
Location of existing trees and new trees provides street buffers, mitigation for parking lots, and an architectural complement that visually mitigates between parking lots and building(s)	☒	☐	☐	
Shrubs are selected to complement the natural setting, provide visual interest and screen less-desirable elements of the project	☒	☐	☐	
A variety of species is selected for texture and color	☒	☐	☐	
Provides overall order and continuity of the Landscape plan	☒	☐	☐	

Native plants or plants that have historically been prevalent on the Island are utilized	☒	☐	☐	
A variety of sizes is selected to create a "layered" appearance for visual interest and a sense of depth	☒	☐	☐	
The location of existing mature trees is taken into account in placement of shrubs so as not to damage tree roots	☒	☐	☐	
Proper spacing and location for plants to reach their mature size and natural shape while avoiding excessive or unnatural pruning	☒	☐	☐	
Proposed groundcovers are evergreen species with low maintenance needs	☒	☐	☐	
Large, grassed lawn areas encompassing a major portion of the site are avoided	☒	☐	☐	
The adjacent development is taken into account in determining the most appropriate buffer so as not to depart too dramatically from the neighborhood	☒	☐	☐	
Ornamentals and Annuals are limited to entrances and other focal points	☒	☐	☐	

NATURAL RESOURCE PROTECTION

DESIGN GUIDE/LMO CRITERIA	Complies Yes	No	Not Applicable	Comments or Conditions
An effort has been made to preserve existing trees and under story plants	☒	☐	☐	
Supplemental and replacement trees meet LMO requirements for size, species and number	☒	☐	☐	
Wetlands if present are avoided and the required buffers are maintained	☐	☐	☒	
Sand dunes if present are not disturbed	☐	☐	☒	

COMMENTS & CONDITIONS

Staff recommend approval of the Final submittal for 86 Helmsman Way, Black Marlin Hurricane Bar with the following conditions:

1. Any additional information as required by the Board.

Shelter Cove Park Expansion
33 Shelter Cove Lane
Conceptual
December 9, 2025
DRB-001102-2025

Town of Hilton Head Island
Community Development Department
One Town Center Court
Hilton Head Island, SC 29928
Phone: 843-341-4757 Fax: 843-842-8908
www.hiltonheadislandsc.gov

FOR OFFICIAL USE ONLY
Date Received: _____
Accepted by: _____
DRB #: _____
Meeting Date: _____

Applicant/Agent Name: Brian Witmer Company: Witmer Jones Keefer
Mailing Address: 23 Promenade St, Suite 201 City: Bluffton State: SC Zip: 29910
Telephone: 843-757-7411 Fax: _____ E-mail: brian@wjkltd.com
Project Name: Shelter Cove Park (Phase 2) Project Address: 35 Shelter Cove Lane
Parcel Number [PIN]: R 520 012 00C 0002 0000 __ __ __ __ __ __ __ __ __ __ __ __
Zoning District: PD-1 Overlay District(s): _____

CORRIDOR REVIEW, MAJOR
DESIGN REVIEW BOARD (DRB) SUBMITTAL REQUIREMENTS

Digital Submissions may be accepted via e-mail by calling 843-341-4757.

Project Category:
- ✓ Concept Approval – Proposed Development
- _____ Final Approval – Proposed Development
- _____ Alteration/Addition
- _____ Sign

Submittal Requirements for ***All*** projects:

_____ Private Architectural Review Board (ARB) Notice of Action (if applicable): When a project is within the jurisdiction of an ARB, the applicant shall submit such ARB's written notice of action per LMO Section 16-2-103.I.4.b.iii.01. Submitting an application to the ARB to meet this requirement is the responsibility of the applicant.

_____ Filing Fee: Concept Approval-Proposed Development $175, Final Approval – Proposed Development $175, Alterations/Additions $100, Signs $25; cash or check made payable to the Town of Hilton Head Island.

Additional Submittal Requirements:
Concept Approval – Proposed Development
- ✓ A survey (1"=30' minimum scale) of property lines, existing topography and the location of trees meeting the tree protection regulations of Sec. 16-6-104.C.2, and if applicable, location of bordering streets, marshes and beaches.
- ✓ A site analysis study to include specimen trees, access, significant topography, wetlands, buffers, setbacks, views, orientation and other site features that may influence design.
- ✓ A draft written narrative describing the design intent of the project, its goals and objectives and how it reflects the site analysis results.
- ✓ Context photographs of neighboring uses and architectural styles.
- ✓ Conceptual site plan (to scale) showing proposed location of new structures, parking areas and landscaping.
- _____ Conceptual sketches of primary exterior elevations showing architectural character of the proposed development, materials, colors, shadow lines and landscaping.

Additional Submittal Requirements:

Final Approval – Proposed Development

_____ A final written narrative describing how the project conforms with the conceptual approval and design review guidelines of Sec. 16-3-106.F.3.

_____ Final site development plan meeting the requirements of Appendix D: D-6.F.

_____ Final site lighting and landscaping plans meeting the requirements of Appendix D: D-6.H and D-6.I.

_____ Final floor plans and elevation drawings (1/8"=1'-0" minimum scale) showing exterior building materials and colors with architectural sections and details to adequately describe the project.

_____ A color board (11"x17" maximum) containing actual color samples of all exterior finishes, keyed to the elevations, and indicating the manufacturer's name and color designation.

_____ Any additional information requested by the Design Review Board at the time of concept approval, such as scale model or color renderings, that the Board finds necessary in order to act on a final application.

Additional Submittal Requirements:

Alterations/Additions

_____ All of the materials required for final approval of proposed development as listed above, plus the following additional materials.

_____ A survey (1"=30' minimum scale) of property lines, existing topography and the location of trees meeting the tree protection regulations of Sec. 16-6-104.C.2, and if applicable, location of bordering streets, marshes and beaches.

_____ Photographs of existing structure.

Additional Submittal Requirements:

Signs

_✓_ Accurate color rendering of sign showing dimensions, type of lettering, materials and actual color samples.

For freestanding signs:

_✓_ Site plan (1”=30’ minimum scale) showing location of sign in relation to buildings, parking, existing signs, and property lines.

_✓_ Proposed landscaping plan.

For wall signs:

_____ Photograph or drawing of the building depicting the proposed location of the sign.

_____ Location, fixture type, and wattage of any proposed lighting.

Note: All application items must be received by the deadline date in order to be reviewed by the DRB per LMO Appendix D: D-23.

A representative for each agenda item is strongly encouraged to attend the meeting.

Are there recorded private covenants and/or restrictions that are contrary to, conflict with, or prohibit the proposed request? If yes, a copy of the private covenants and/or restrictions must be submitted with this application. ☐YES ☑NO

To the best of my knowledge, the information on this application and all additional documentation is true, factual, and complete. I hereby agree to abide by all conditions of any approvals granted by the Town of Hilton Head Island. I understand that such conditions shall apply to the subject property only and are a right or obligation transferable by sale.

I further understand that in the event of a State of Emergency due to a Disaster, the review and approval times set forth in the Land Management Ordinance may be suspended.

Brian Witmer — SIGNATURE

10/16/2025 — DATE

Shelter Cove Park Expansion
33 Shelter Cove Lane
Conceptual
Narrative
December 9, 2025
DRB-001102-2025

Witmer Jones Keefer Ltd.
landscape architecture
land planning

NARRATIVE

This project is an expansion of the existing Shelter Cove Community Park located at 35 Shelter Cove lane. As part of this expansion, the existing playground will be demolished and replaced with a larger, inclusive playground within a fenced area. A new waterfront promenade will be installed to match the existing promenade from phase one. Finally, additional parking will be installed, as well as a play lawn, trail, observation deck, and associated stormwater BMPs.

23 PROMENADE STREET, SUITE 201
BLUFFTON, SC 29910
OFFICE: (843) 757.7411

PROGRAM RECOMMENDATIONS:

- EXTEND WATERFRONT PROMENADE
- ADD PARKING
- EXPAND PLAYGROUND
- UTILIZE OAK CANOPY
- ICONIC TRAIL DESTINATION











OCTOBER 2025

PROJECT NO.: 1042.26

Witmer Jones Keefer Ltd. / 23 Promenade St., Suite 201, Bluffton SC. 29910 / ph: (843) 757.7411 / www.wjkltd.com

SHELTER COVE PARK

TOWN OF HILTON HEAD ISLAND, SOUTH CAROLINA

© 2022 WJK LTD.
PLAN IS CONCEPTUAL IN NATURE
AND IS SUBJECT TO CHANGE.
THIS SHEET TO SCALE AT: 24"X26"

Witmer Jones Keefer Ltd.
landscape architecture
land planning

LEGEND

⚠	CALC POINT – CORNER NOT SET	LO	LIVE OAK
CMF ■	CONC. MONUMENT FOUND	P	PINE
RBF ●	IRON REBAR FOUND	PA	PALMETTO
PKF ●	PK NAIL FOUND	PEC	PECAN
PKS ○	PK NAIL SET	SB	SUGAR BERRY
●	BOLLARD	SYC	SYCAMORE
OCJ#	CABLE JUNCTION BOX	WL	WILLOW OAK
Ⓒ	COMMUNICATIONS MANHOLE	WO	WATER OAK
▨	DRAINAGE INLET	WXM	WAX MYRTLE
Ⓔ	ELECTRIC CONDUIT	BOC	BACK OF CURB
Ⓔ	ELECTRIC METER	BSL	BUILDING SETBACK LINE
Ⓔ	ELECTRIC MANHOLE	CNA	COULD NOT ACCESS
OE	ELECTRIC STUBOUT	IE	INVERT ELEVATION
	FIRE DEPARTMENT CONNECTION	PD	PIPE DIRECTION
	FIRE HYDRANT	PVC	POLYVINYL CHLORIDE PIPE
	FUEL MANHOLE	RCP	REINFORCED CONCRETE PIPE
OFUEL	FUEL SHUTOFF	OCRM	OCEAN & COASTAL RESOURCE MANAGEMENT
⊠	GRATE INLET	TOW	TOP OF WATER
	GROUND LIGHT	DWS	DETECTABLE WARNING SURFACE
×	GUY WIRE	HCAP LZ	HANDICAP LOADING ZONE
	HANDICAP PARKING	SBA	STOP BAR
	IRRIGATION CONTROL VALVE	SYL	SINGLE YELLOW LINE (SOLID)
JB	JUNCTION BOX	SWL	SINGLE WHITE LINE (SOLID)
	LIGHT POLE	8	CONTOUR LINE
	POWER POLE	BB	BOTTOM OF BANK
Ⓓ	STORM DRAIN MANHOLE	x	FENCE LINE
×12.9	SPOT ELEVATION	FM	FORCEMAIN
	SIGN	LSA	LANDSCAPE AREA
OSPG	SPIGOT	OHP	OVERHEAD POWER LINE
OSSCO	SANITARY SEWER CLEAN OUT	TB	TOP OF BANK
OS	SANITARY SEWER LATERAL OR STUBOUT	CPY	TREE CANOPY
Ⓢ	SANITARY SEWER MANHOLE	TV	UNDERGROUND TV LINE
OTEL	TELEPHONE JUNCTION BOX	SD	UNDERGROUND DRAINAGE LINE
TR	TRANSFORMER–ELECTRIC	UE	UNDERGROUND ELECTRIC LINE
OW	WATER LATERAL OR STUBOUT	UFO	UNDERGROUND FIBER OPTICS LINE
OW	WATER METER	SS	UNDERGROUND SEWER LINE
	WATER VALVE	UT	UNDERGROUND TELEPHONE
PCS	4x4 WOOD POST / SECURITY CAMERA	W	UNDERGROUND WATER LINE
	MARSHGRASS		BRICK
Ⓟ	NUMBER OF PARKING SPACES		CONCRETE
BC	BLACK CHERRY		DETECTABLE WARNING SURFACE
CH	CHERRY		EDGE OF PAVEMENT
CM	CRAPE MYRTLE		GRAVEL
HIC	HICKORY		RIP–RAP
LA	LAUREL OAK		



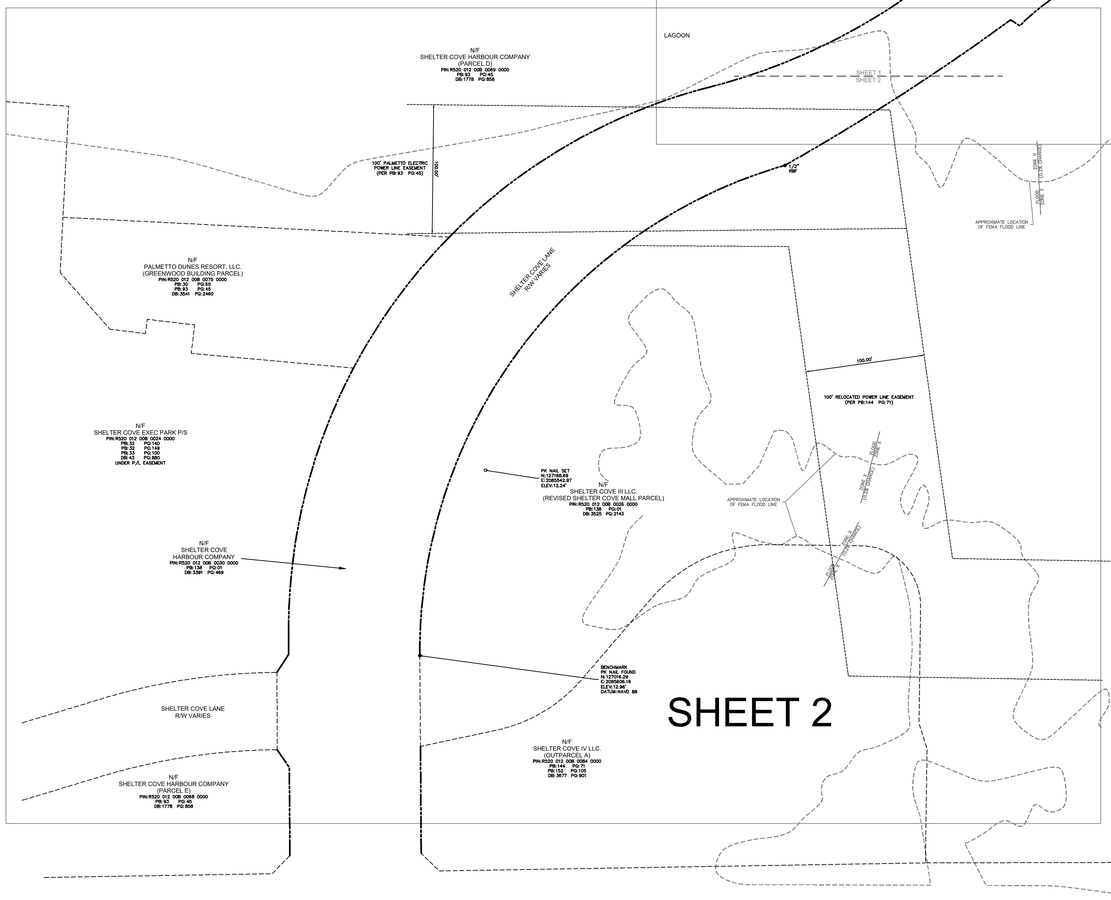

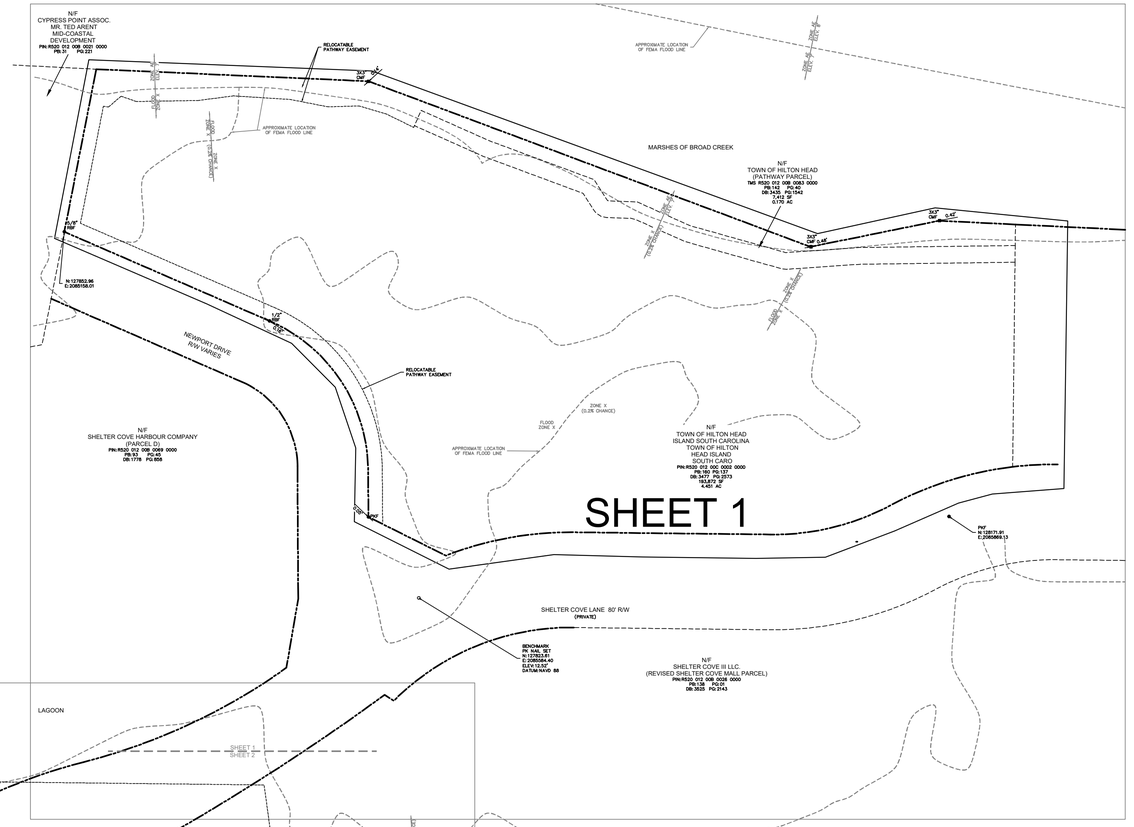

LINE TABLE			LINE TABLE		
LABEL	BEARING	DISTANCE	LABEL	BEARING	DISTANCE
L1	N42°22'51"W	73.82'	L43	S79°09'13"W	2.21'
L2	N76°04'11"W	18.03'	L44	S62°04'13"W	13.95'
L3	N42°16'56"W	64.88'	L45	S70°52'26"W	13.55'
L4	N08°38'05"W	18.03'	L46	S84°08'44"W	1.86'
L5	N42°19'30"W	18.00'	L47	S84°08'44"W	20.23'
L6	N32°20'05"W	58.64'	L48	S84°08'44"W	4.22'
L7	N42°19'30"W	111.24'	L49	S68°06'43"W	59.85'
L8	S71°33'30"W	174.55'	L50	S52°45'14"W	3.36'
L9	N30°51'56"W	57.22'	L51	S52°45'14"W	11.54'
L10	S48°39'33"W	164.00'	L52	S67°59'08"W	8.95'
L11	S74°34'17"W	72.51'	L53	S70°17'05"W	32.21'
L12	N42°24'10"W	39.18'	L54	S74°08'17"W	24.93'
L13	S71°28'50"W	187.43'	L55	S74°08'17"W	26.32'
L14	S47°16'05"W	130.54'	L56	S64°29'43"W	26.41'
L15	S44°05'56"W	62.02'	L57	S46°19'08"W	26.96'
L16	S63°42'55"W	83.66'	L58	S59°09'11"W	31.23'
L17	S72°13'14"W	48.40'	L59	S51°37'43"W	49.88'
L18	S50°08'21"W	24.72'	L60	S40°37'41"W	30.57'
L19	N74°34'29"W	21.05'	L61	S47°02'20"W	48.92'
L20	S68°20'49"W	93.56'	L62	S67°17'22"W	18.15'
L21	S72°00'50"W	62.71'	L63	S07°44'50"W	15.31'
L22	S17°59'10"E	14.00'	L64	S56°35'05"W	3.38'
L23	N71°59'55"E	63.61'	L65	S80°50'50"W	7.38'
L24	N68°20'49"E	88.87'	L66	N42°24'10"W	45.21'
L25	S74°34'29"E	16.36'	L67	S71°28'50"W	177.78'
L26	N50°08'21"E	19.30'	L68	N30°53'45"W	100.10'
L27	N72°02'45"E	45.01'	L69	N56°35'05"E	4.33'
L28	N63°42'55"E	83.66'	L70	N07°44'50"E	13.89'
L29	N44°04'44"E	61.25'	L71	N67°17'22"E	13.43'
L30	N47°15'30"E	130.19'	L72	N47°02'20"E	51.73'
L31	S50°17'00"W	33.29'	L73	N40°37'41"E	30.09'
L32	S48°54'40"W	37.99'	L74	N51°37'43"E	47.93'
L33	S42°40'57"W	25.77'	L75	N59°09'11"E	31.79'
L34	S36°52'16"W	34.33'	L76	N46°19'08"E	26.39'
L35	S36°08'43"W	3.46'	L77	N64°29'43"E	23.48'
L36	S42°30'13"W	32.01'	L78	N74°08'17"E	25.75'
L37	S52°20'14"W	9.56'	L79	N17°59'10"W	1.58'
L38	S52°20'14"W	15.67'	L80	S47°10'35"E	149.79'
L39	S60°40'32"W	40.78'	L81	S80°12'59"W	9.25'
L40	S64°05'03"W	49.19'	L82	S42°24'02"E	76.16'
L41	S64°05'03"W	23.10'	L83	S42°24'02"E	89.61'
L42	S79°09'13"W	21.75'			

CURVE TABLE					
LABEL	RADIUS	ARC	CHORD	CHORD BEARING	DELTA
C1	470.00'	367.69'	358.38'	N19°54'47"W	44°49'23"
C2	470.00'	255.30'	252.17'	N18°03'37"E	31°07'20"
C3	510.00'	188.45'	187.38'	N23°02'10"E	21°10'17"
C4	77.55'	89.49'	84.61'	N75°23'00"W	66°07'14"
C5	290.00'	107.47'	106.86'	S30°32'37"W	21°14'01"
C6	210.00'	105.31'	104.21'	S34°19'35"W	28°43'57"
C7	290.00'	21.20'	21.20'	S46°33'52"W	4°11'22"
C8	290.00'	89.45'	89.10'	S35°37'59"W	17°40'25"
C9	137.50'	158.93'	150.23'	N75°27'59"W	66°13'54"
C10	14.00'	13.51'	12.99'	N77°46'56"E	55°16'55"
C11	14.00'	5.35'	5.32'	N61°05'33"E	21°54'20"
C12	14.00'	4.79'	4.77'	N53°54'25"E	19°37'02"
C13	149.50'	172.80'	163.34'	N75°27'59"W	66°13'32"
C14	210.00'	167.20'	162.82'	S25°51'07"W	45°37'08"
C15	1909.86'	225.21'	225.08'	S15°11'31"W	6°45'23"
C16	425.00'	550.45'	512.77'	S05°20'11"E	74°12'27"

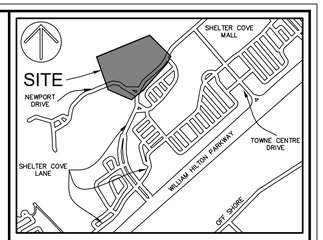

VICINITY MAP NOT TO SCALE

NOTES

1. LEGEND, LINE TABLE & CURVE TABLE ARE LOCATED ON COVER SHEET.
2. THESE PARCELS APPEAR TO LIE IN MULTIPLE FLOOD ZONES, X, X (0.2% CHANCE), AE (ELEVATION 7'), AND AE (ELEVATION 8'), COMMUNITY 450250, MAP NUMBER 45013C0461G.
3. CONTOURS ARE IN ONE FOOT INTERVALS. TREE SIZES SHOWN ARE IN INCHES OF DIAMETER.
4. VERTICAL DATUM IS NAVD 88.
5. HORIZONTAL DATUM IS SOUTH CAROLINA STATE PLANE GRID (NAD 83).
6. THE EXISTENCE AND LOCATION OF THE SURFACE AND SUB–SURFACE UTILITIES SHOWN HEREON ARE BASED UPON AVAILABLE RECORDS AND SURFACE VISIBLE FEATURES ALONG WITH ELECTRONIC AND ACOUSTICAL EVIDENCE AS OF FEBRUARY 25, 2022. THE EXTENT AND LIABILITY OF THIS INFORMATION IS LIMITED TO THE STANDARDS OF CARE FOR A SPECIFIC UTILITY INVESTIGATION AS DEFINED BY THE AMERICAN SOCIETY OF CIVIL ENGINEERS (ASCE) PUBLICATION 38–02. THE EXACT LOCATION AND DEPTH OF UNDERGROUND UTILITIES CANNOT BE DETERMINED WITHOUT EXPOSING THEM IN SOME WAY. PRIOR TO CONSTRUCTION OR EXCAVATION, IT IS REQUIRED BY LAW TO CONTACT THE STATE 811 UTILITY PROTECTION CENTER.
7. OCRM CRITICAL LINE SIGNED OFF BY DHEC ON 12–23–2021.

REFERENCES

1. PB:143 PG:122
2. PB:138 PG:01
3. PB:93 PG:45

REVISIONS

1. UPDATED ALL TREES SIZES WITHIN SURVEY LIMITS ON 10–15–2024.

60 30 0 60 120

GRAPHIC SCALE (1"=60')

PREPARED FOR:
TOWN OF HILTON HEAD

AN AS–BUILT / TREE AND TOPOGRAPHIC SURVEY OF

SHELTER COVE LANE &
SHELTER COVE PARK

A PORTION OF TAX PARCEL No. R520 012 00B 0030 0000
& TAX PARCEL No. R520 012 00C 0002 0000

THE TOWN OF HILTON HEAD
BEAUFORT COUNTY, SOUTH CAROLINA

FIELD WORK: GBS
FIELD CHECK: JWR
DRAWN BY: DTJ
FIELD DATE: 10–15–2024
DATE: 10–25–2024
SCALE: 1"=60'
PROJECT No.: BFT–21390
FILE: BFT–21390 AT2.DWG

COVER SHEET

ATLAS
SURVEYING, INC.
168 BOARDWALK DRIVE, SUITE A.
RIDGELAND, SC 29936.
PHONE: (843) 645–9277
WEBSITE: WWW.ATLASSURVEYING.COM

SOUTH CAROLINA
ATLAS SURVEYING BFT, LLC.
No. C05928
CERTIFICATE OF AUTHORIZATION

SOUTH CAROLINA
PROFESSIONAL ENGINEER
No. 28139
LAND SURVEYOR
JEREMY W. REEDER

I HEREBY STATE THAT TO THE BEST OF MY PROFESSIONAL KNOWLEDGE, INFORMATION, AND BELIEF, THE SURVEY SHOWN HEREIN WAS MADE IN ACCORDANCE WITH THE REQUIREMENTS OF THE STANDARDS OF PRACTICE MANUAL FOR SURVEYING IN SOUTH CAROLINA, AND MEETS OR EXCEEDS THE REQUIREMENTS AS SPECIFIED THEREIN.

JEREMY W. REEDER
S.C.P.L.S. No. 28139
NOT VALID UNLESS CRIMPED WITH SEAL

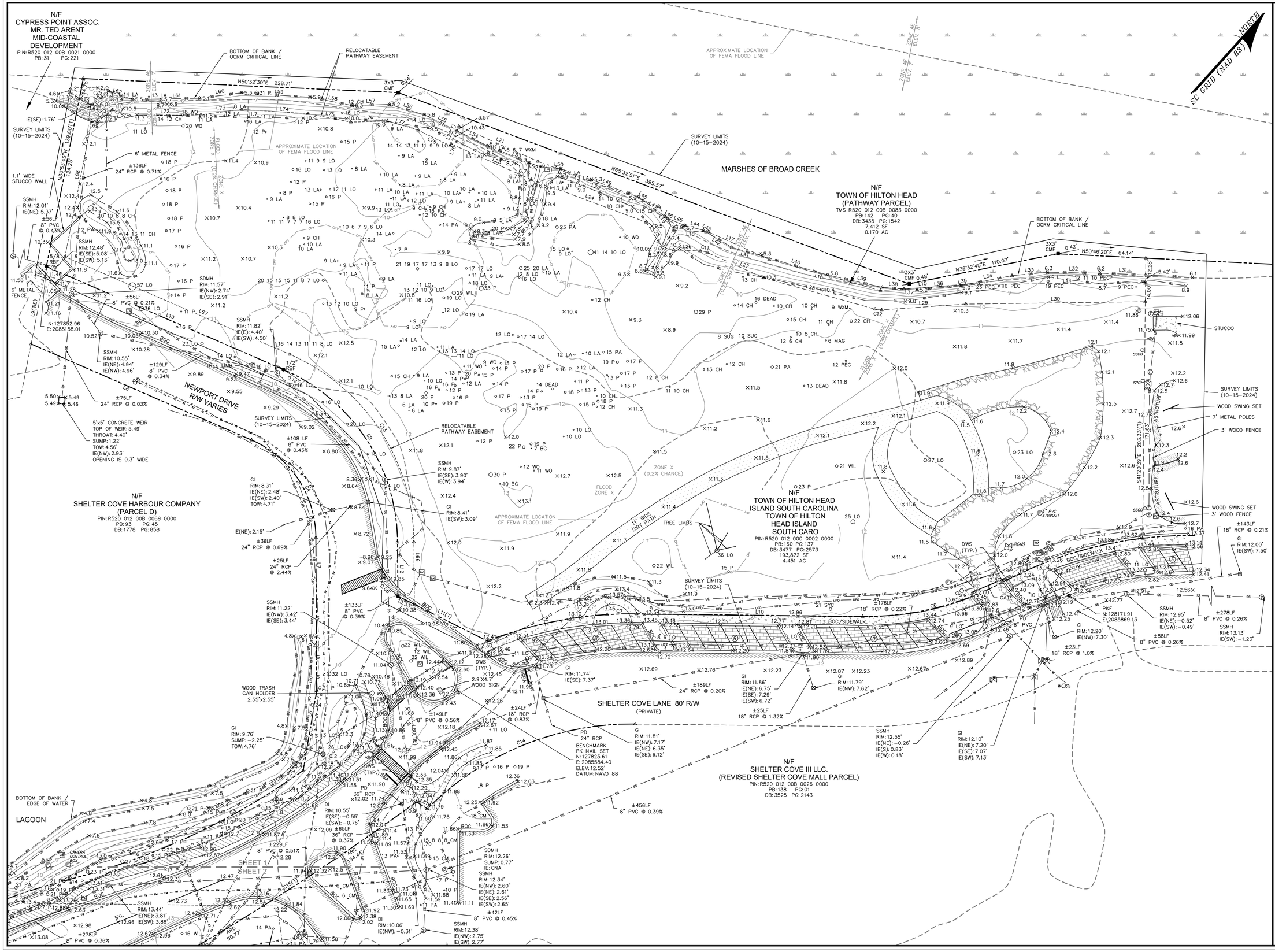

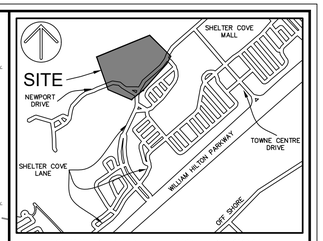

VICINITY MAP NOT TO SCALE

NOTES

1. LEGEND, LINE TABLE & CURVE TABLE ARE LOCATED ON COVER SHEET.
2. THESE PARCELS APPEAR TO LIE IN MULTIPLE FLOOD ZONES, X, X (0.2% CHANCE), AE (ELEVATION 7'), AND AE (ELEVATION 8'), COMMUNITY 450250, MAP NUMBER 45013C0461G.
3. CONTOURS ARE IN ONE FOOT INTERVALS. TREE SIZES SHOWN ARE IN INCHES OF DIAMETER.
4. VERTICAL DATUM IS NAVD 88.
5. HORIZONTAL DATUM IS SOUTH CAROLINA STATE PLANE GRID (NAD 83).
6. THE EXISTENCE AND LOCATION OF THE SURFACE AND SUB-SURFACE UTILITIES SHOWN HEREON ARE BASED UPON AVAILABLE RECORDS AND SURFACE VISIBLE FEATURES ALONG WITH ELECTRONIC AND ACOUSTICAL EVIDENCE AS OF FEBRUARY 25, 2022. THE EXTENT AND LIABILITY OF THIS INFORMATION IS LIMITED TO THE STANDARDS OF CARE FOR A SPECIFIC UTILITY INVESTIGATION AS DEFINED BY THE AMERICAN SOCIETY OF CIVIL ENGINEERS (ASCE) PUBLICATION 38-02. THE EXACT LOCATION AND DEPTH OF UNDERGROUND UTILITIES CANNOT BE DETERMINED WITHOUT EXPOSING THEM IN SOME WAY. PRIOR TO CONSTRUCTION OR EXCAVATION, IT IS REQUIRED BY LAW TO CONTACT THE STATE 811 UTILITY PROTECTION CENTER.
7. OCRM CRITICAL LINE SIGNED OFF BY DHEC ON 12-23-2021.

REFERENCES

1. PB:143 PG:122
2. PB:138 PG:01
3. PB:93 PG:45

REVISIONS

1. UPDATED ALL TREES SIZES WITHIN SURVEY LIMITS ON 10-15-2024.

30 15 0 30 60

GRAPHIC SCALE (1"=30')

PREPARED FOR:
TOWN OF HILTON HEAD

AN AS-BUILT / TREE AND TOPOGRAPHIC SURVEY OF

SHELTER COVE LANE &
SHELTER COVE PARK

A PORTION OF TAX PARCEL No. R520 012 00B 0030 0000 & TAX PARCEL No. R520 012 00C 0002 0000

THE TOWN OF HILTON HEAD
BEAUFORT COUNTY, SOUTH CAROLINA

FIELD WORK:	GBS
FIELD CHECK:	JWR
DRAWN BY:	DTJ
FIELD DATE:	10-15-2024
DATE:	10-25-2024
SCALE:	1"=60'
PROJECT No.:	BFT-21390
FILE:	BFT-21390 ATZ.DWG

SHEET 1 OF 2

ATLAS
SURVEYING, INC.
168 BOARDWALK DRIVE, SUITE A.
RIDGELAND, SC 29936.
PHONE: (843) 645-9277
WEBSITE: WWW.ATLASSURVEYING.COM

SOUTH CAROLINA CERTIFICATE OF AUTHORIZATION
ATLAS SURVEYING BFT, LLC.
No. C05928

SOUTH CAROLINA PROFESSIONAL LAND SURVEYOR
No. 28139
JEREMY W. REEDER

I HEREBY STATE THAT TO THE BEST OF MY PROFESSIONAL KNOWLEDGE, INFORMATION, AND BELIEF, THE SURVEY SHOWN HEREIN WAS MADE IN ACCORDANCE WITH THE REQUIREMENTS OF THE STANDARDS OF PRACTICE MANUAL FOR SURVEYING IN SOUTH CAROLINA, AND MEETS OR EXCEEDS THE REQUIREMENTS AS SPECIFIED THEREIN.

JEREMY W. REEDER
S.C.P.L.S. No. 28139
NOT VALID UNLESS CRIMPED WITH SEAL

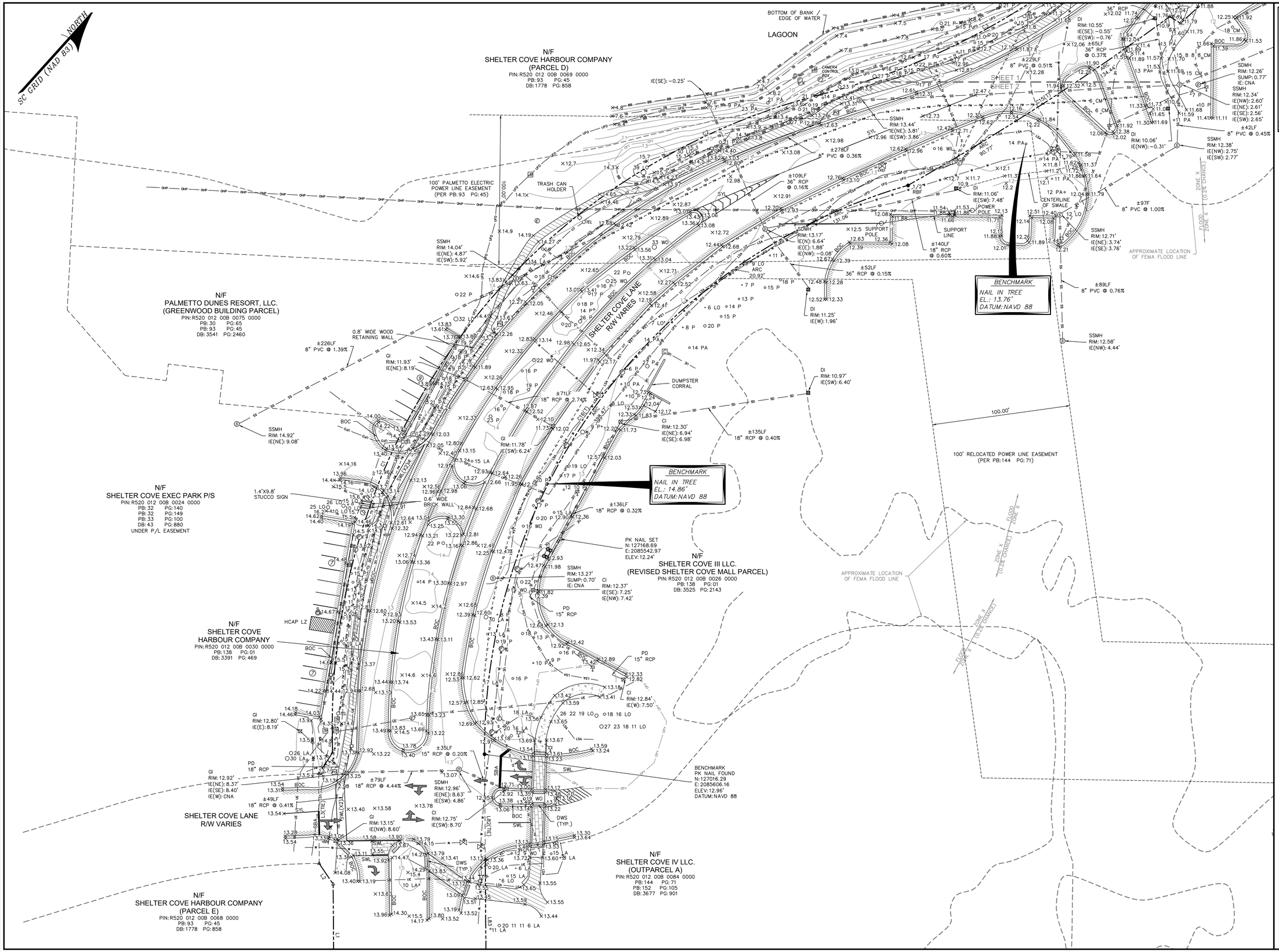

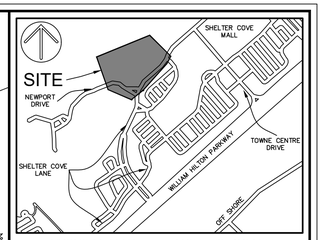

VICINITY MAP NOT TO SCALE

NOTES

1. LEGEND, LINE TABLE & CURVE TABLE ARE LOCATED ON COVER SHEET.
2. THESE PARCELS APPEAR TO LIE IN MULTIPLE FLOOD ZONES, X, X (0.2% CHANCE), AE (ELEVATION 7'), AND AE (ELEVATION 8'), COMMUNITY 450250, MAP NUMBER 45013C0461G.
3. CONTOURS ARE IN ONE FOOT INTERVALS. TREE SIZES SHOWN ARE IN INCHES OF DIAMETER.
4. VERTICAL DATUM IS NAVD 88.
5. HORIZONTAL DATUM IS SOUTH CAROLINA STATE PLANE GRID (NAD 83).
6. THE EXISTENCE AND LOCATION OF THE SURFACE AND SUB-SURFACE UTILITIES SHOWN HEREON ARE BASED UPON AVAILABLE RECORDS AND SURFACE VISIBLE FEATURES ALONG WITH ELECTRONIC AND ACOUSTICAL EVIDENCE AS OF FEBRUARY 25, 2022. THE EXTENT AND LIABILITY OF THIS INFORMATION IS LIMITED TO THE STANDARDS OF CARE FOR A SPECIFIC UTILITY INVESTIGATION AS DEFINED BY THE AMERICAN SOCIETY OF CIVIL ENGINEERS (ASCE) PUBLICATION 38-02. THE EXACT LOCATION AND DEPTH OF UNDERGROUND UTILITIES CANNOT BE DETERMINED WITHOUT EXPOSING THEM IN SOME WAY. PRIOR TO CONSTRUCTION OR EXCAVATION, IT IS REQUIRED BY LAW TO CONTACT THE STATE 811 UTILITY PROTECTION CENTER.
7. OCRM CRITICAL LINE SIGNED OFF BY DHEC ON 12-23-2021.

REFERENCES

1. PB: 143 PG: 122
2. PB: 138 PG: 01
3. PB: 93 PG: 45

REVISIONS

1. UPDATED ALL TREES SIZES WITHIN SURVEY LIMITS ON 10-15-2024.

30 15 0 30 60

GRAPHIC SCALE (1"=30')

PREPARED FOR:
TOWN OF HILTON HEAD

AN AS-BUILT / TREE AND TOPOGRAPHIC SURVEY OF

SHELTER COVE LANE & SHELTER COVE PARK

A PORTION OF TAX PARCEL No. R520 012 00B 0030 0000
& TAX PARCEL No. R520 012 00C 0002 0000

THE TOWN OF HILTON HEAD
BEAUFORT COUNTY, SOUTH CAROLINA

FIELD WORK:	GBS
FIELD CHECK:	JWR
DRAWN BY:	DTJ
FIELD DATE:	10-22-2024
DATE:	10-25-2024
SCALE:	1"=30'
PROJECT No.:	BFT-21390
FILE:	BFT-21390 AT2.DWG

SHEET 2 OF 2

ATLAS
SURVEYING, INC.
168 BOARDWALK DRIVE, SUITE A.
RIDGELAND, SC 29936.
PHONE: (843) 645-9277
WEBSITE: WWW.ATLASSURVEYING.COM

SOUTH CAROLINA
ATLAS SURVEYING BFT, LLC.
No. C05928
CERTIFICATE OF AUTHORIZATION

SOUTH CAROLINA PROFESSIONAL
No. 28139
LAND SURVEYOR
JEREMY W. REEDER

I HEREBY STATE THAT TO THE BEST OF MY PROFESSIONAL KNOWLEDGE, INFORMATION, AND BELIEF, THE SURVEY SHOWN HEREIN WAS MADE IN ACCORDANCE WITH THE REQUIREMENTS OF THE STANDARDS OF PRACTICE MANUAL FOR SURVEYING IN SOUTH CAROLINA, AND MEETS OR EXCEEDS THE REQUIREMENTS AS SPECIFIED THEREIN.

JEREMY W. REEDER
S.C.P.L.S. No. 28139
NOT VALID UNLESS CRIMPED WITH SEAL

Shelter Cove Park Expansion
33 Shelter Cove Lane
Conceptual - Plan Set
December 9, 2025
DRB-001102-2025

SHELTER COVE PARK - PHASE 2

HILTON HEAD ISLAND

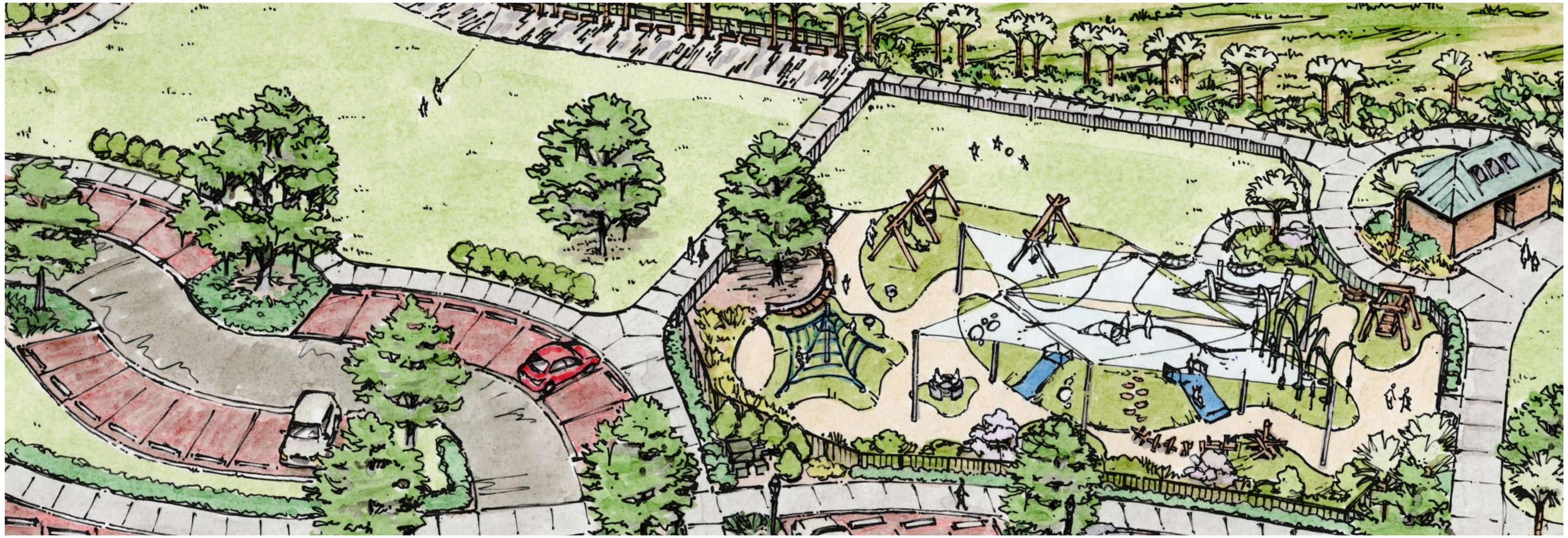

CONSULTANT INFO

ALL TOPOGRAPHY, EXISTING TREES, SITE BOUNDARY, SITE SURVEY DATA, ETC. WERE TAKEN FROM DIGITAL FILES PROVIDED BY:

ATLAS SURVEYING INC.
RIDGELAND, SC.
(843) 645.9277

ALL CIVIL ENGINEERING INFORMATION WAS TAKEN FROM DIGITAL FILES PROVIDED BY:

THOMAS AND HUTTON ENGINEERING
SAVANNAH, GA.
(912) 234.5300

ISSUED: NOVEMBER 11, 2025

CONTACT

WITMER JONES KEEFER
23 PROMENADE ST., SUITE 201
BLUFFTON, SC. 29910
(843) 757.7411
WWW.WJKLTD.COM

SHEET INDEX

CS	-	COVER SHEET
L11	-	PROPOSED CONDITIONS
L30	-	NOTES
L100	-	KEY SHEET - 01
L101	-	KEY SHEET - 02
L102	-	KEY SHEET - 03
L300	-	GRADING PLAN
L500	-	PLANTING PLAN - 01
L501	-	PLANTING PLAN - 02
L502	-	PLANT SCHEDULE AND DETAILS
L600	-	SITE DETAILS - 01
L601	-	SITE DETAILS - 02
L602	-	SITE DETAILS - 03
L603	-	SITE DETAILS - 04
L604	-	SITE DETAILS - 05
L605	-	SITE DETAILS - 06
L606	-	SITE DETAILS - 07
L607	-	SITE DETAILS - 08
L608	-	SITE DETAILS - 09
L609	-	PLAYGROUND IMAGERY - 01
L610	-	PLAYGROUND IMAGERY - 02

Witmer Jones Keefer Ltd.
landscape architecture
land planning
www.wjkltd.com
23 Promenade Street, Suite 201 | Bluffton, South Carolina | 29910 | ph 843.757.7411

© 2024 WJK LTD.
DESIGN CONCEPTS, DRAWING, SHEETS, LOGOS, SPECIFICATIONS, DETAILS, WRITTEN MATERIAL SHALL NOT BE USED OR REPRODUCED IN WHOLE OR IN PART IN ANY FORM WITHOUT PRIOR WRITTEN CONSENT OF WJK LTD.

THIS SHEET TO SCALE AT: 24"X36"

SITE DEVELOPMENT PLANS
FOR
SHELTER COVE - PHASE 2
39 SHELTER COVE LANE
TOWN OF HILTON HEAD ISLAND, SOUTH CAROLINA

DATE:	NOV 11, 2025
PROJECT NO.:	22062.15
DRAWN BY:	CK, ED
CHECKED BY:	BW

DRB SUBMITTAL SET, NOT FOR CONSTRUCTION

REVISIONS:

DRAWING TITLE
COVER SHEET

DRAWING NUMBER
CS



Wilmer, Jones, Keefer Ltd.
landscape architecture
land planning
www.wjkltd.com
23 Promenade Street, Suite 201 | Bluffton, South Carolina | 29910 | ph 843.757.7411

© 2024 WJK LTD.
DESIGN CONCEPTS, DRAWING, SHEETS, LOGOS, SPECIFICATIONS, DETAILS, WRITTEN MATERIAL SHALL NOT BE USED OR REPRODUCED IN WHOLE OR IN PART IN ANY FORM WITHOUT PRIOR WRITTEN CONSENT OF WJK LTD.
THIS SHEET TO SCALE AT: 24"X36"

SITE DEVELOPMENT PLANS
FOR

SHELTER COVE - PHASE 2

39 SHELTER COVE LANE
TOWN OF HILTON HEAD ISLAND, SOUTH CAROLINA

DATE:	OCT 17, 2025
PROJECT NO.:	22062.15
DRAWN BY:	CK, ED
CHECKED BY:	BW

DPR SUBMITTAL SET, NOT FOR CONSTRUCTION

REVISIONS:

DRAWING TITLE
SITE ANALYSIS EXISTING CONDITIONS

DRAWING NUMBER
L10

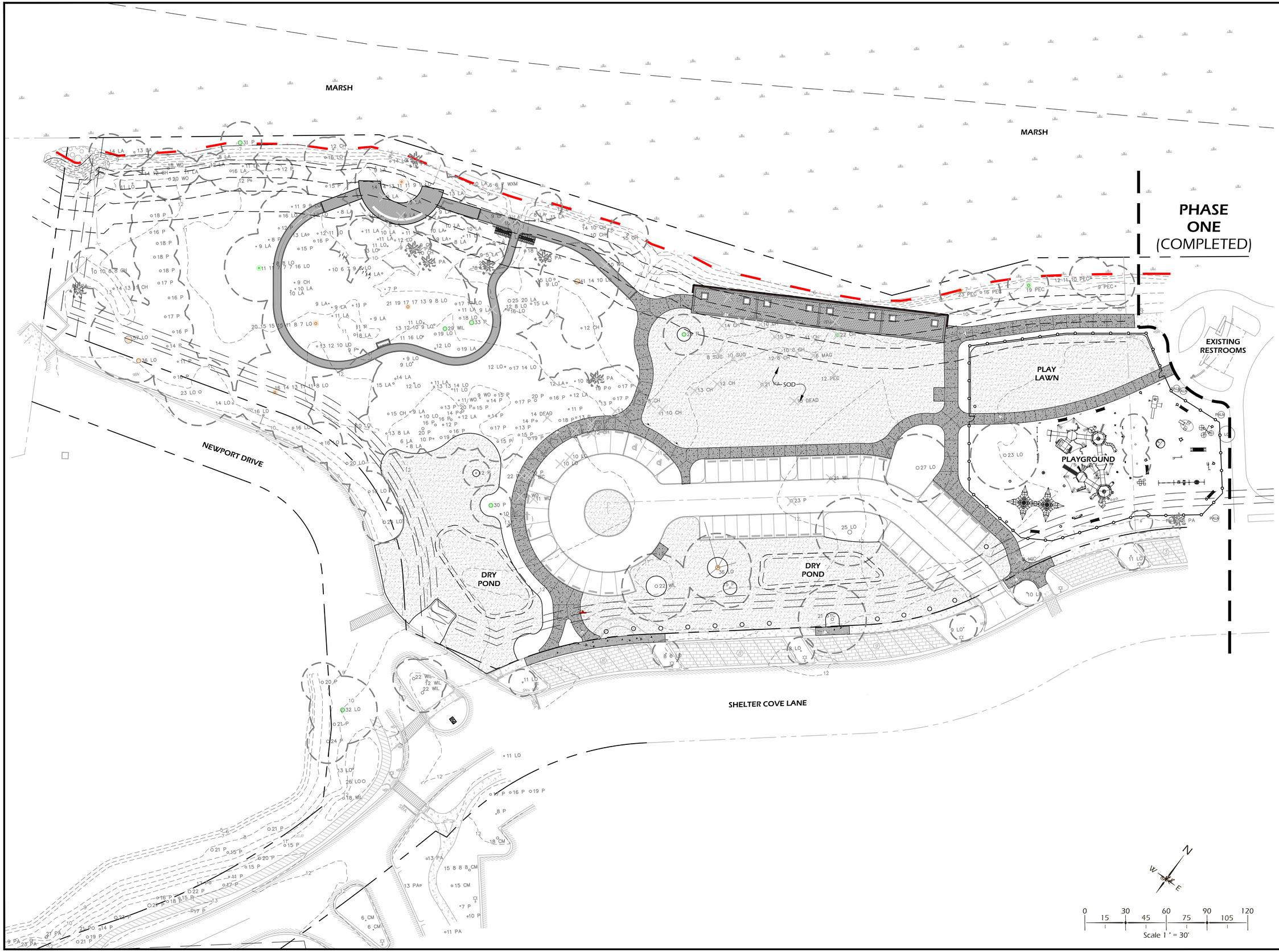

Wimer, Jones, Keefer Ltd.
landscape architecture
land planning
www.wjkltd.com
23 Promenade Street, Suite 201 | Bluffton, South Carolina | 29910 | ph 843.757.7411

© 2024 WJK LTD.
DESIGN CONCEPTS, DRAWING, SHEETS, LOGOS, SPECIFICATIONS, DETAILS, WRITTEN MATERIAL SHALL NOT BE USED OR REPRODUCED IN WHOLE OR IN PART IN ANY FORM WITHOUT PRIOR WRITTEN CONSENT OF WJK LTD.

THIS SHEET TO SCALE AT: 24"X36"

SITE DEVELOPMENT PLANS
FOR

SHELTER COVE - PHASE 2

39 SHELTER COVE LANE
TOWN OF HILTON HEAD ISLAND, SOUTH CAROLINA

DATE:	NOV 11, 2025
PROJECT NO.:	22062.15
DRAWN BY:	CK, ED
CHECKED BY:	BW

DRB SUBMITTAL SET, NOT FOR CONSTRUCTION

REVISIONS:

DRAWING TITLE
REFERENCE PLAN PROPOSED CONDITIONS

DRAWING NUMBER
L11

GENERAL NOTES:

1. CONSTRUCTION DETAILS, LAYOUT, GRADING, UTILITIES, PROPERTY LINES, ETC. MUST BE FIELD VERIFIED WITH AN ASSUMED ACCURACY REPORTED TO THE OWNERS OR OWNERS REPRESENTATIVE. ALL CONSTRUCTION MUST ADHERE TO ALL APPLICABLE CODES AND ORDINANCES. IN THE EVENT OF A CONFLICT BETWEEN THE CODES AND THESE PLANS, THE CODES SHALL PREVAIL.
2. EXISTING UTILITIES AND IMPROVEMENTS SHOWN ON THESE PLANS WERE SURVEYED BY SURVEYING CONSULTANTS, DATED 2-22. REVISED 3-22. EXISTING UTILITIES AND IMPROVEMENTS ARE SHOWN IN AN APPROXIMATE MANNER ONLY AND ARE NOT GUARANTEED TO BE COMPLETE OR ACCURATE. THE CONTRACTOR SHALL DETERMINE THE EXACT LOCATION OF ALL EXISTING UTILITIES AND IMPROVEMENTS BEFORE BEGINNING CONSTRUCTION. THE CONTRACTOR SHALL CONTACT ALL UTILITY COMPANIES AT LEAST 72 HOURS BEFORE BEGINNING CONSTRUCTION.
3. THE EXISTING GROUND CONTOURS AND SPOT ELEVATIONS SHOWN ON THESE PLANS WERE OBTAINED FROM A FIELD SURVEY PERFORMED BY SURVEYING CONSULTANTS, DATED 2-22. REVISED 3-22. THE CONTRACTOR SHALL VERIFY ALL EXISTING CONDITIONS AND NOTIFY THE OWNER'S REPRESENTATIVE OF ANY DISCREPANCIES BEFORE BEGINNING CONSTRUCTION.
4. THE CONTRACTOR SHALL PROTECT ALL EXISTING UTILITY APPURTENANCES (CLEAN OUTS, VALVE/METER BOXES AND/OR MANHOLES) DURING CONSTRUCTION AND ADJUST TO FINISH GRADE AS NECESSARY. ALL EXISTING UTILITY APPURTENANCES SHALL BE ADJUSTED TO FINISH GRADE AS NECESSARY AT THE CONTRACTOR'S EXPENSE.
5. ALL EXISTING UTILITIES TO BE REMOVED OR ABANDONED SHALL BE DISCONNECTED AT THE NEAREST CONSTRUCTION JOINT.
6. ALL CURB AND GUTTER DEMOLITION SHALL BE SAWCUT AT THE NEAREST CONSTRUCTION JOINT.
7. ALL PAVEMENT REMOVAL SHALL BE SAWCUT AT THE NEAREST CONSTRUCTION JOINT.
8. ALL DISTURBED AREAS NOT PAVED OR BUILT UPON SHALL BE FINISH GRADED AND SEEDED WITH GRASS AS SPECIFIED IN THE LANDSCAPE PLANS.
9. ALL CONSTRUCTION SHALL COMPLY WITH THE LATEST EDITION OF THE INTERNATIONAL BUILDING CODE AND ALL OTHER APPLICABLE LOCAL, STATE, AND FEDERAL CODES, ORDINANCES, AND REGULATIONS.
10. ALL CONSTRUCTION WITHIN THE RIGHT-OF-WAY SHALL CONFORM TO THE LATEST EDITION OF THE SOUTH CAROLINA DEPARTMENT OF TRANSPORTATION STANDARD SPECIFICATIONS FOR HIGHWAY CONSTRUCTION.
11. ALL CONSTRUCTION SHALL CONFORM TO THE LATEST EDITION OF THE OCRM CRITICAL LINE MANUAL.
12. ALL CONSTRUCTION SHALL COMPLY WITH THE LATEST EDITION OF THE OCRM STORMWATER MANUAL.
13. ALL CONSTRUCTION SHALL COMPLY WITH THE LATEST EDITION OF THE OCRM BEACH MANAGEMENT PLAN.
14. ALL CONSTRUCTION SHALL COMPLY WITH THE LATEST EDITION OF THE OCRM BEACH ACCESS HANDBOOK.
15. ALL CONSTRUCTION SHALL COMPLY WITH THE LATEST EDITION OF THE OCRM BEACH RENOURISHMENT MANUAL.
16. ALL CONSTRUCTION SHALL COMPLY WITH THE LATEST EDITION OF THE OCRM BEACH ACCESS HANDBOOK.
17. ALL CONSTRUCTION SHALL COMPLY WITH THE LATEST EDITION OF THE OCRM BEACH RENOURISHMENT MANUAL.
18. ALL CONSTRUCTION SHALL COMPLY WITH THE LATEST EDITION OF THE OCRM BEACH ACCESS HANDBOOK.
19. ALL CONSTRUCTION SHALL COMPLY WITH THE LATEST EDITION OF THE OCRM BEACH RENOURISHMENT MANUAL.
20. ALL CONSTRUCTION SHALL COMPLY WITH THE LATEST EDITION OF THE OCRM BEACH ACCESS HANDBOOK.
21. ALL CONSTRUCTION SHALL COMPLY WITH THE LATEST EDITION OF THE OCRM BEACH RENOURISHMENT MANUAL.
22. ALL CONSTRUCTION SHALL COMPLY WITH THE LATEST EDITION OF THE OCRM BEACH ACCESS HANDBOOK.
23. ALL CONSTRUCTION SHALL COMPLY WITH THE LATEST EDITION OF THE OCRM BEACH RENOURISHMENT MANUAL.
24. ALL CONSTRUCTION SHALL COMPLY WITH THE LATEST EDITION OF THE OCRM BEACH ACCESS HANDBOOK.
25. ALL CONSTRUCTION SHALL COMPLY WITH THE LATEST EDITION OF THE OCRM BEACH RENOURISHMENT MANUAL.
26. ALL CONSTRUCTION SHALL COMPLY WITH THE LATEST EDITION OF THE OCRM BEACH ACCESS HANDBOOK.
27. ALL CONSTRUCTION SHALL COMPLY WITH THE LATEST EDITION OF THE OCRM BEACH RENOURISHMENT MANUAL.
28. ALL CONSTRUCTION SHALL COMPLY WITH THE LATEST EDITION OF THE OCRM BEACH ACCESS HANDBOOK.
29. ALL CONSTRUCTION SHALL COMPLY WITH THE LATEST EDITION OF THE OCRM BEACH RENOURISHMENT MANUAL.
30. ALL CONSTRUCTION SHALL COMPLY WITH THE LATEST EDITION OF THE OCRM BEACH ACCESS HANDBOOK.
31. ALL CONSTRUCTION SHALL COMPLY WITH THE LATEST EDITION OF THE OCRM BEACH RENOURISHMENT MANUAL.
32. ALL CONSTRUCTION SHALL COMPLY WITH THE LATEST EDITION OF THE OCRM BEACH ACCESS HANDBOOK.
33. ALL CONSTRUCTION SHALL COMPLY WITH THE LATEST EDITION OF THE OCRM BEACH RENOURISHMENT MANUAL.
34. ALL CONSTRUCTION SHALL COMPLY WITH THE LATEST EDITION OF THE OCRM BEACH ACCESS HANDBOOK.
35. ALL CONSTRUCTION SHALL COMPLY WITH THE LATEST EDITION OF THE OCRM BEACH RENOURISHMENT MANUAL.
36. ALL CONSTRUCTION SHALL COMPLY WITH THE LATEST EDITION OF THE OCRM BEACH ACCESS HANDBOOK.
37. ALL CONSTRUCTION SHALL COMPLY WITH THE LATEST EDITION OF THE OCRM BEACH RENOURISHMENT MANUAL.
38. ALL CONSTRUCTION SHALL COMPLY WITH THE LATEST EDITION OF THE OCRM BEACH ACCESS HANDBOOK.
39. ALL CONSTRUCTION SHALL COMPLY WITH THE LATEST EDITION OF THE OCRM BEACH RENOURISHMENT MANUAL.
40. ALL CONSTRUCTION SHALL COMPLY WITH THE LATEST EDITION OF THE OCRM BEACH ACCESS HANDBOOK.
41. ALL CONSTRUCTION SHALL COMPLY WITH THE LATEST EDITION OF THE OCRM BEACH RENOURISHMENT MANUAL.
42. ALL CONSTRUCTION SHALL COMPLY WITH THE LATEST EDITION OF THE OCRM BEACH ACCESS HANDBOOK.
43. ALL CONSTRUCTION SHALL COMPLY WITH THE LATEST EDITION OF THE OCRM BEACH RENOURISHMENT MANUAL.
44. ALL CONSTRUCTION SHALL COMPLY WITH THE LATEST EDITION OF THE OCRM BEACH ACCESS HANDBOOK.
45. ALL CONSTRUCTION SHALL COMPLY WITH THE LATEST EDITION OF THE OCRM BEACH RENOURISHMENT MANUAL.
46. ALL CONSTRUCTION SHALL COMPLY WITH THE LATEST EDITION OF THE OCRM BEACH ACCESS HANDBOOK.
47. ALL CONSTRUCTION SHALL COMPLY WITH THE LATEST EDITION OF THE OCRM BEACH RENOURISHMENT MANUAL.
48. ALL CONSTRUCTION SHALL COMPLY WITH THE LATEST EDITION OF THE OCRM BEACH ACCESS HANDBOOK.
49. ALL CONSTRUCTION SHALL COMPLY WITH THE LATEST EDITION OF THE OCRM BEACH RENOURISHMENT MANUAL.
50. ALL CONSTRUCTION SHALL COMPLY WITH THE LATEST EDITION OF THE OCRM BEACH ACCESS HANDBOOK.
51. ALL CONSTRUCTION SHALL COMPLY WITH THE LATEST EDITION OF THE OCRM BEACH RENOURISHMENT MANUAL.
52. ALL CONSTRUCTION SHALL COMPLY WITH THE LATEST EDITION OF THE OCRM BEACH ACCESS HANDBOOK.
53. ALL CONSTRUCTION SHALL COMPLY WITH THE LATEST EDITION OF THE OCRM BEACH RENOURISHMENT MANUAL.
54. ALL CONSTRUCTION SHALL COMPLY WITH THE LATEST EDITION OF THE OCRM BEACH ACCESS HANDBOOK.
55. ALL CONSTRUCTION SHALL COMPLY WITH THE LATEST EDITION OF THE OCRM BEACH RENOURISHMENT MANUAL.
56. ALL CONSTRUCTION SHALL COMPLY WITH THE LATEST EDITION OF THE OCRM BEACH ACCESS HANDBOOK.
57. ALL CONSTRUCTION SHALL COMPLY WITH THE LATEST EDITION OF THE OCRM BEACH RENOURISHMENT MANUAL.
58. ALL CONSTRUCTION SHALL COMPLY WITH THE LATEST EDITION OF THE OCRM BEACH ACCESS HANDBOOK.
59. ALL CONSTRUCTION SHALL COMPLY WITH THE LATEST EDITION OF THE OCRM BEACH RENOURISHMENT MANUAL.
60. ALL CONSTRUCTION SHALL COMPLY WITH THE LATEST EDITION OF THE OCRM BEACH ACCESS HANDBOOK.
61. ALL CONSTRUCTION SHALL COMPLY WITH THE LATEST EDITION OF THE OCRM BEACH RENOURISHMENT MANUAL.
62. ALL CONSTRUCTION SHALL COMPLY WITH THE LATEST EDITION OF THE OCRM BEACH ACCESS HANDBOOK.
63. ALL CONSTRUCTION SHALL COMPLY WITH THE LATEST EDITION OF THE OCRM BEACH RENOURISHMENT MANUAL.
64. ALL CONSTRUCTION SHALL COMPLY WITH THE LATEST EDITION OF THE OCRM BEACH ACCESS HANDBOOK.
65. ALL CONSTRUCTION SHALL COMPLY WITH THE LATEST EDITION OF THE OCRM BEACH RENOURISHMENT MANUAL.
66. ALL CONSTRUCTION SHALL COMPLY WITH THE LATEST EDITION OF THE OCRM BEACH ACCESS HANDBOOK.
67. ALL CONSTRUCTION SHALL COMPLY WITH THE LATEST EDITION OF THE OCRM BEACH RENOURISHMENT MANUAL.
68. ALL CONSTRUCTION SHALL COMPLY WITH THE LATEST EDITION OF THE OCRM BEACH ACCESS HANDBOOK.
69. ALL CONSTRUCTION SHALL COMPLY WITH THE LATEST EDITION OF THE OCRM BEACH RENOURISHMENT MANUAL.
70. ALL CONSTRUCTION SHALL COMPLY WITH THE LATEST EDITION OF THE OCRM BEACH ACCESS HANDBOOK.
71. ALL CONSTRUCTION SHALL COMPLY WITH THE LATEST EDITION OF THE OCRM BEACH RENOURISHMENT MANUAL.
72. ALL CONSTRUCTION SHALL COMPLY WITH THE LATEST EDITION OF THE OCRM BEACH ACCESS HANDBOOK.
73. ALL CONSTRUCTION SHALL COMPLY WITH THE LATEST EDITION OF THE OCRM BEACH RENOURISHMENT MANUAL.
74. ALL CONSTRUCTION SHALL COMPLY WITH THE LATEST EDITION OF THE OCRM BEACH ACCESS HANDBOOK.
75. ALL CONSTRUCTION SHALL COMPLY WITH THE LATEST EDITION OF THE OCRM BEACH RENOURISHMENT MANUAL.
76. ALL CONSTRUCTION SHALL COMPLY WITH THE LATEST EDITION OF THE OCRM BEACH ACCESS HANDBOOK.
77. ALL CONSTRUCTION SHALL COMPLY WITH THE LATEST EDITION OF THE OCRM BEACH RENOURISHMENT MANUAL.
78. ALL CONSTRUCTION SHALL COMPLY WITH THE LATEST EDITION OF THE OCRM BEACH ACCESS HANDBOOK.
79. ALL CONSTRUCTION SHALL COMPLY WITH THE LATEST EDITION OF THE OCRM BEACH RENOURISHMENT MANUAL.
80. ALL CONSTRUCTION SHALL COMPLY WITH THE LATEST EDITION OF THE OCRM BEACH ACCESS HANDBOOK.
81. ALL CONSTRUCTION SHALL COMPLY WITH THE LATEST EDITION OF THE OCRM BEACH RENOURISHMENT MANUAL.
82. ALL CONSTRUCTION SHALL COMPLY WITH THE LATEST EDITION OF THE OCRM BEACH ACCESS HANDBOOK.
83. ALL CONSTRUCTION SHALL COMPLY WITH THE LATEST EDITION OF THE OCRM BEACH RENOURISHMENT MANUAL.
84. ALL CONSTRUCTION SHALL COMPLY WITH THE LATEST EDITION OF THE OCRM BEACH ACCESS HANDBOOK.
85. ALL CONSTRUCTION SHALL COMPLY WITH THE LATEST EDITION OF THE OCRM BEACH RENOURISHMENT MANUAL.
86. ALL CONSTRUCTION SHALL COMPLY WITH THE LATEST EDITION OF THE OCRM BEACH ACCESS HANDBOOK.
87. ALL CONSTRUCTION SHALL COMPLY WITH THE LATEST EDITION OF THE OCRM BEACH RENOURISHMENT MANUAL.
88. ALL CONSTRUCTION SHALL COMPLY WITH THE LATEST EDITION OF THE OCRM BEACH ACCESS HANDBOOK.
89. ALL CONSTRUCTION SHALL COMPLY WITH THE LATEST EDITION OF THE OCRM BEACH RENOURISHMENT MANUAL.
90. ALL CONSTRUCTION SHALL COMPLY WITH THE LATEST EDITION OF THE OCRM BEACH ACCESS HANDBOOK.
91. ALL CONSTRUCTION SHALL COMPLY WITH THE LATEST EDITION OF THE OCRM BEACH RENOURISHMENT MANUAL.
92. ALL CONSTRUCTION SHALL COMPLY WITH THE LATEST EDITION OF THE OCRM BEACH ACCESS HANDBOOK.
93. ALL CONSTRUCTION SHALL COMPLY WITH THE LATEST EDITION OF THE OCRM BEACH RENOURISHMENT MANUAL.
94. ALL CONSTRUCTION SHALL COMPLY WITH THE LATEST EDITION OF THE OCRM BEACH ACCESS HANDBOOK.
95. ALL CONSTRUCTION SHALL COMPLY WITH THE LATEST EDITION OF THE OCRM BEACH RENOURISHMENT MANUAL.
96. ALL CONSTRUCTION SHALL COMPLY WITH THE LATEST EDITION OF THE OCRM BEACH ACCESS HANDBOOK.
97. ALL CONSTRUCTION SHALL COMPLY WITH THE LATEST EDITION OF THE OCRM BEACH RENOURISHMENT MANUAL.
98. ALL CONSTRUCTION SHALL COMPLY WITH THE LATEST EDITION OF THE OCRM BEACH ACCESS HANDBOOK.
99. ALL CONSTRUCTION SHALL COMPLY WITH THE LATEST EDITION OF THE OCRM BEACH RENOURISHMENT MANUAL.
100. ALL CONSTRUCTION SHALL COMPLY WITH THE LATEST EDITION OF THE OCRM BEACH ACCESS HANDBOOK.

GRADING NOTES:

1. ALL GRADES SHOWN ARE FINISHED GRADES.
2. ALL SPOT ELEVATIONS IN PARKING AREAS ARE AT THE BASE OF THE FACE OF CURB, UNLESS NOTED OTHERWISE.
3. ALL SLOPES SHALL BE 3:1 OR FLATTER, UNLESS OTHERWISE NOTED.
4. IF DISCREPANCIES EXIST BETWEEN THE GRADES SHOWN ON THE PLAN AND THE EXISTING GROUND SURFACE, MAKE GRADING ADJUSTMENTS NECESSARY TO MAINTAIN THE GENERAL INTENT OF THE DESIGN, WITH PRIOR APPROVAL FROM THE OWNER'S REPRESENTATIVE.
5. WHERE CONSTRUCTION ACTIVITY IS IN A POSITION TO BE SUBJECT TO OPERABLE CAUSED BY WIND EROSION, THE CONTRACTOR SHALL IMPLEMENT THE NECESSARY MEASURES TO PREVENT THIS OCCURRENCE. THESE MEASURES MUST BE INITIATED AS SOON AS PRACTICAL.
6. ALL TOPSOIL REMOVED FROM GRADING AREAS SHALL BE STOCKPILED AT A LOCATION AS SHOWN ON THE PLAN AND THE EXISTING GROUND COVER PRESERVED AS NECESSARY. THE CONTRACTOR SHALL NOTIFY THE OWNER OF ANY SUCH DISCOVERY OF ANY SUCH.
7. IF AMOUNT OF SCREENED TOPSOIL STOCKPILED FROM STRIPPING OPERATIONS IS INSUFFICIENT TO PROVIDE THE NECESSARY TOPSOILS FOR PESTALT TREATED LUMBER) AND CONSTRUCTION CHEMICALS THAT COULD BE EXPOSED TO STORMWATER RUNOFF. CONSTRUCTION DEBRIS, DITCH, PITS, FUELS AND BUILDING MATERIALS SHALL BE PREVENTED FROM BECOMING A POLLUTANT SOURCE IN STORMWATER DISCHARGES. ACTIVITIES SHALL HAVE TEMPORARY OR PERMANENT CEASED, THE CONTRACTOR SHALL IMPLEMENT (14) DAYS AFTER WORK HAS CEASED EXCEPT AS STATED BELOW.
8. BEFORE SPREADING SCREENED TOPSOIL, LOOSEN SUBGRADE TO A MINIMUM DEPTH OF 4" TO ENSURE PROPER BONDING BETWEEN SUBSOIL AND TOPSOIL. REMOVE ALL DEBRIS OTHER THAN MULCH FROM THE SURFACE BEFORE SPREADING TOPSOIL.
9. ALL AREAS DISTURBED BY CONSTRUCTION ACTIVITY SHALL BE RESTORED TO A MINIMUM CONDITION EQUAL TO OR BETTER THAN THAT WHICH EXISTED PRIOR TO THE START OF CONSTRUCTION.
10. FOR PLANTING BEDS AND LAWNS, MIX AMENDED PLANTING SOIL BEFORE SPREADING AT APPLY AMENDMENTS AS SURFACE DRESSING AFTER PLANTING.

SOIL AMENDMENT NOTES:

1. TOPSOIL SHALL CONSIST OF THE NATURALLY OCCURRING LOAM, SANDY LOAM, SILT LOAM OR CLAY LOAM MIXTURE BEARING SOILS ADAPTED TO THE SUSTENANCE OF PLANT LIFE, WITH THE FOLLOWING TEXTURE:
   1.1. ORGANIC MATERIAL - TWO (2) TO TWENTY (20) PERCENT BY MASS
   1.2. SAND CONTENT - THIRTY-FIVE (35) TO SEVENTY (70) PERCENT BY MASS
   1.3. CLAY SILT CONTENT - THIRTY-FIVE (35) TO SEVENTY (70) PERCENT BY MASS
   1.4. TOPSOIL SHALL BE FREE OF PLANTS OR PLANT PARTS OF BERMUDA GRASS, QUACK GRASS, JOHNSON GRASS, NUTSEDGE, POISON IVY, POISON OAK, CANADA THISTLE, SOW THISTLE, THISTLE, DOCK, PURSLANE, BINDWEED, NIGHTSHADE, MORNING GLORY, CHICKWEED, RAGWEED, WILD CARROT, HORSETAIL, OR OTHER NOXIOUS WEEDS. TOPSOIL SHALL BE FREE OF STONES, LUMPS, PLANTS OR PLANT PARTS LARGER THAN 1" IN DIAMETER, ASHES, SLAG, CINDERS, TAR RESIDUES, PARTS OF STUMPS, ROOTS, BARK, OR OTHER EXTRANEOUS MATERIALS. IT SHALL ALSO BE REASONABLY FREE FROM WEEDS OF ANY KIND.
2. TOPSOIL SHALL BE STOCKPILED AT LOCATIONS SHOWN ON THE PLANS. TOPSOIL SHALL NOT BE PLACED WHILE IN A FROZEN OR MUDDY CONDITION, WHEN THE SUBGRADE IS IN AN IMPROPER CONDITION, OR WHEN THE FIELD CONDITIONS ARE OTHERWISE UNSUITABLE FOR WORKING TOPSOIL.
3. AMENDED PLANTING SOIL:
   3.1. ORGANIC MATERIAL - TWO (2) TO TWENTY (20) PERCENT BY MASS
   3.2. SAND CONTENT - THIRTY-FIVE (35) TO SEVENTY (70) PERCENT BY MASS
   3.3. RECOMMENDED AMENDMENTS:
   3.4. EXISTING NON-PROCESSED SOIL MAY BE APPROVED BY THE OWNER OR OWNERS REPRESENTATIVE PRIOR TO ANY AMENDMENTS.
   3.5. ANY BACKFILLING
   3.6. EXISTING NON-PROCESSED SOIL REPORTS MUST BE APPROVED BY THE OWNER OR OWNERS REPRESENTATIVE PRIOR TO ANY BACKFILLING.
4. ALLOWANCES:
   4.1. THE PLANTING SOIL MIX FOR ON-SITE PLANTINGS (TREES, SHRUBS & GROUNDCOVERS)
   4.2. 80% SANDY LOAM TOPSOIL AS SPECIFIED AND AMENDED PER SOIL REPORT)
   4.2.1. 2 PARTS HUMUS AND/OR PEAT
   4.2.2. 1 PART STERILIZED COMPOSTED COW MANURE
   4.2.3. 1 PART SHREDDED, COMPOSTED HARDWOOD MULCH
   4.3. PLANTING SOIL MIX FOR PERENNIAL BEDS CONSIST OF THE FOLLOWING:
   4.3.1. 2 PARTS HUMUS AND/OR PEAT
   4.3.2. 1 PART (50% STERILIZED COMPOSTED COW MANURE AND NON-AGRICULTURAL BUILDERS SAND)
   4.3.3. GYPSUM, LIME AND SUMMERCIAL FERTILIZER SHALL ONLY BE USED AS PER SOIL REPORT.
   4.3.4. ALLOWANCES SUBJECT TO CHANGE BASED ON SOIL REPORT.
5. SCREENED TOPSOIL OF TOPSOIL, SCREEN TOPSOIL WITH NO HALF (1/2) INCH SIZE SIEVE. STOCKPILE TOPSOIL IN LOCATIONS AS SHOWN ON PLANS. ARE RESPONSIBLE FOR OBTAINING ZONING, BUILDING CODES PERMITS AND APPROVALS FOR LANDSCAPE ARCHITECT PRIOR TO INSTALLATION.
6. PRIOR TO STOCKPILING OF TOPSOIL, SCREEN TOPSOIL WITH NO HALF (1/2) INCH SIZE SIEVE. STOCKPILE TOPSOIL IN LOCATIONS AS SHOWN ON PLANS. ARE RESPONSIBLE FOR OBTAINING ZONING, BUILDING CODES PERMITS AND APPROVALS FOR LANDSCAPE ARCHITECT PRIOR TO INSTALLATION.
   6.1. IN CURB TYPE AREAS, PLANTING SOIL SHALL BE PLACED TO TWO (2) INCHES BELOW TOP OF CURB.
   6.2. IN WALK AREAS, PLANTING SOIL SHALL BE PLACED TO ONE (1) INCH BELOW TOP OF WALK.
   6.3. IN SEEDED AREAS, PLANTING SOIL SHALL BE PLACED TO ONE (1) INCH BELOW TOP OF ADJACENT SURFACE.
   6.4. IN SODDED AREAS, PLANTING SOIL SHALL BE PLACED TO ONE (1) INCH BELOW TOP OF ADJACENT SURFACE.
7. ALL TOPSOIL SHALL BE SCREENED THROUGH A SCREEN NOT EXCEEDING ONE (1) INCH MESH OPENING.
8. ALL TOPSOIL SHALL BE FREE OF STONES, LUMPS, PLANTS OR PARTS OF PLANTS, SUBSOIL, TREES, BRUSH, METALS, OR OTHER EXTRANEOUS MATERIALS HARMFUL TO PLANT GROWTH OR HUSBANDRY.
9. ALL TOPSOIL SHALL BE FREE OF PLANTS OR PARTS OF PLANTS OF BERMUDA GRASS, QUACK GRASS, JOHNSON GRASS, NUTSEDGE, POISON IVY, POISON OAK, CANADA THISTLE, SOW THISTLE, THISTLE, DOCK, PURSLANE, BINDWEED, NIGHTSHADE, MORNING GLORY, CHICKWEED, RAGWEED, WILD CARROT, HORSETAIL, OR OTHER NOXIOUS WEEDS.
10. TOPSOIL SHALL BE FREE OF STONES, LUMPS, PLANTS OR PLANT PARTS LARGER THAN 1" IN DIAMETER, ASHES, SLAG, CINDERS, TAR RESIDUES, PARTS OF STUMPS, ROOTS, BARK, OR OTHER EXTRANEOUS MATERIALS. IT SHALL ALSO BE REASONABLY FREE FROM WEEDS OF ANY KIND.
11. TOPSOIL SHALL BE FREE OF PLANTS OR PLANT PARTS OF BERMUDA GRASS, QUACK GRASS, JOHNSON GRASS, NUTSEDGE, POISON IVY, POISON OAK, CANADA THISTLE, SOW THISTLE, THISTLE, DOCK, PURSLANE, BINDWEED, NIGHTSHADE, MORNING GLORY, CHICKWEED, RAGWEED, WILD CARROT, HORSETAIL, OR OTHER NOXIOUS WEEDS.
12. TOPSOIL SHALL BE FREE OF STONES, LUMPS, PLANTS OR PLANT PARTS LARGER THAN 1" IN DIAMETER, ASHES, SLAG, CINDERS, TAR RESIDUES, PARTS OF STUMPS, ROOTS, BARK, OR OTHER EXTRANEOUS MATERIALS. IT SHALL ALSO BE REASONABLY FREE FROM WEEDS OF ANY KIND.
13. TOPSOIL SHALL BE FREE OF PLANTS OR PLANT PARTS OF BERMUDA GRASS, QUACK GRASS, JOHNSON GRASS, NUTSEDGE, POISON IVY, POISON OAK, CANADA THISTLE, SOW THISTLE, THISTLE, DOCK, PURSLANE, BINDWEED, NIGHTSHADE, MORNING GLORY, CHICKWEED, RAGWEED, WILD CARROT, HORSETAIL, OR OTHER NOXIOUS WEEDS.
14. TOPSOIL SHALL BE FREE OF STONES, LUMPS, PLANTS OR PLANT PARTS LARGER THAN 1" IN DIAMETER, ASHES, SLAG, CINDERS, TAR RESIDUES, PARTS OF STUMPS, ROOTS, BARK, OR OTHER EXTRANEOUS MATERIALS. IT SHALL ALSO BE REASONABLY FREE FROM WEEDS OF ANY KIND.
15. TOPSOIL SHALL BE FREE OF PLANTS OR PLANT PARTS OF BERMUDA GRASS, QUACK GRASS, JOHNSON GRASS, NUTSEDGE, POISON IVY, POISON OAK, CANADA THISTLE, SOW THISTLE, THISTLE, DOCK, PURSLANE, BINDWEED, NIGHTSHADE, MORNING GLORY, CHICKWEED, RAGWEED, WILD CARROT, HORSETAIL, OR OTHER NOXIOUS WEEDS.

LAYOUT NOTES:

1. DESIGNS DATA PROVIDED IN ELECTRONIC FORMAT OR PRINTS FOR INFORMATION PURPOSES ONLY AND SHOULD BE USED AT YOUR OWN RISK AS IS PROVIDED WITHOUT REPRESENTATIONS OR WARRANTIES OF ANY KIND. CONFLICT BETWEEN THE INFORMATION REFLECTED ON THE LATEST RELEASED PLAN SHEETS AND THAT PROVIDED VIA ELECTRONIC FORMAT SHALL BE RESOLVED IN FAVOR OF THE SEALED PLAN SHEETS.
2. CONTRACTOR SHALL NOTIFY ARCHITECT, APPROVAL PRIOR TO CONSTRUCTION ANY DISCREPANCIES IN EXISTING SITE CONDITIONS AS SHOWN ON THE PLANS AND THE EXISTING CONDITIONS OBSERVED IN THE FIELD.
3. CONTRACTOR SHALL SUPPLY A CERTIFIED SURVEY BY A REGISTERED LAND SURVEYOR OF EXISTING SOILS TO SHOW ACTUAL GRADES AT THE FOLLOWING STAGES:
   3.1. AFTER ALL BUILDING CORNERS ARE ESTABLISHED.
   3.2. THE CONTRACTOR SHALL PROVIDE AMENDED PLANTING SOIL.
   3.3. RECOMMENDED AMENDMENTS:
   3.4. EXISTING NON-PROCESSED SOIL REPORTS MUST BE APPROVED BY THE OWNER OR OWNERS REPRESENTATIVE PRIOR TO ANY BACKFILLING.
   3.5. ANY BACKFILLING
   3.6. EXISTING NON-PROCESSED SOIL REPORTS MUST BE APPROVED BY THE OWNER OR OWNERS REPRESENTATIVE PRIOR TO ANY ALLOWANCES.
4. ALL DIMENSIONS ARE TO FACE OF CURB, EDGE OF PAVING OR CENTERLINE OF WALLS AND COLUMNS UNLESS OTHERWISE NOTED.
5. REFER TO ARCHITECTURAL PLANS FOR ACTUAL BUILDING DIMENSIONS.
6. REFER TO ARCHITECTURAL PLANS FOR EXACT DIMENSIONS OF BUILDING OVERHANGS AND ROOF PROJECTIONS.
7. STAKE ALL BUILDING CORNERS FOR OWNER'S APPROVAL PRIOR TO CONSTRUCTION.
8. LOCATE ALL INSTALLATIONS AND LAYOUT OF ALL IMPROVEMENTS IN FIELD IN THE EXISTING LANDSCAPE AREAS.
9. REFER TO ENGINEERING PLANS FOR DIMENSIONS OF ROADS, CURB AND GUTTER, DEMO, ROADS, ACCURATELY IN CORRECT ALIGNMENT AND GRADE.
10. LOCATE AND INSTALL EQUIPMENT AND LABOR NECESSARY FOR ALL CONSTRUCTION PROTECTION, MAINTENANCE AND REMOVAL OF ALL TEMPORARY CONSTRUCTION.
11. REFER TO ARCHITECTURAL DRAWINGS FOR ALL BUILDING DIMENSIONS.
12. REFER TO ENGINEERING PLANS FOR ALL BUILDING DIMENSIONS.
13. FINISH ALL MATERIALS, EQUIPMENT AND LABOR NECESSARY FOR ALL CONSTRUCTION INDICATED OR IMPLIED IN THE CONTRACT DOCUMENTS.
14. LOCATE AND INSTALL ALL MATERIALS INDICATED INCLUDED BUT NOT LIMITED TO: SIDEWALKS, CURB AND GUTTER, DRIVEWAYS, PARKING AREAS, PAVING, SIGNAGE, LIGHTING, SITE FURNISHINGS, PLANTING, IRRIGATION, ETC.
15. LOCATE ANY INSTALL ALL MATERIALS INDICATED INCLUDED BUT NOT LIMITED TO: SIDEWALKS, CURB AND GUTTER, DRIVEWAYS, PARKING AREAS, PAVING, SIGNAGE, LIGHTING, SITE FURNISHINGS, PLANTING, IRRIGATION, ETC.
16. LOCATE AND INSTALL ALL MATERIALS INDICATED INCLUDED BUT NOT LIMITED TO: SIDEWALKS, CURB AND GUTTER, DRIVEWAYS, PARKING AREAS, PAVING, SIGNAGE, LIGHTING, SITE FURNISHINGS, PLANTING, IRRIGATION, ETC.
17. LOCATE AND INSTALL ALL MATERIALS INDICATED INCLUDED BUT NOT LIMITED TO: SIDEWALKS, CURB AND GUTTER, DRIVEWAYS, PARKING AREAS, PAVING, SIGNAGE, LIGHTING, SITE FURNISHINGS, PLANTING, IRRIGATION, ETC.
18. LOCATE AND INSTALL ALL MATERIALS INDICATED INCLUDED BUT NOT LIMITED TO: SIDEWALKS, CURB AND GUTTER, DRIVEWAYS, PARKING AREAS, PAVING, SIGNAGE, LIGHTING, SITE FURNISHINGS, PLANTING, IRRIGATION, ETC.
19. LOCATE AND INSTALL ALL MATERIALS INDICATED INCLUDED BUT NOT LIMITED TO: SIDEWALKS, CURB AND GUTTER, DRIVEWAYS, PARKING AREAS, PAVING, SIGNAGE, LIGHTING, SITE FURNISHINGS, PLANTING, IRRIGATION, ETC.
20. LOCATE AND INSTALL ALL MATERIALS INDICATED INCLUDED BUT NOT LIMITED TO: SIDEWALKS, CURB AND GUTTER, DRIVEWAYS, PARKING AREAS, PAVING, SIGNAGE, LIGHTING, SITE FURNISHINGS, PLANTING, IRRIGATION, ETC.
21. THE OWNER SHALL BE NOTIFIED AS TO THE TIMING OF THE WORK BY THE CONTRACTOR AT LEAST THAT DID NOT LESS THAN THE OWNER OR OWNERS REPRESENTATIVE IN THE FIELD WITH THE
22. PERSONNEL WHO ARE NOT NOTIFY WORK. LTD. OF THE LANDSCAPE ARCHITECT OR CLEARVIEW NOT ADHERE TO THE LAYOUT AS SPECIFIED WORK NOTIFY WORK. LTD. THE OWNER OR OWNERS REPRESENTATIVE IN THE FIELD WITH THE

LIGHTING NOTES:

1. THE INTENT OF THE LIGHTING DESIGN IS TO PROVIDE DEVELOPMENT LIGHTING FOR ARCHITECTURAL ELEMENTS, MAKE EVERY EFFORT TO CREATE THIS EFFECT BY CLOSE COORDINATION WITH THE LANDSCAPE ARCHITECT BY THE LANDSCAPE ARCHITECT OR OWNER'S REPRESENTATIVE PRIOR TO INSTALLATION.
2. PROVIDE ELECTRICAL SYSTEM BASED ON THE LOCATION AND TYPE OF FIXTURES SHOWN ON THE PLAN. PROVIDE ADDITIONAL LIGHTING DISTRIBUTION AND CONTROL SYSTEM.
3. CAREFUL PLACEMENT OF ALL FIXTURES.
4. PROPERLY SIZED WIRING, TRANSFORMERS, BRANCHES, ACCESSORIES, ETC. AS NECESSARY FOR GUARANTEE OF SATISFACTORY OPERATION OF ALL FIXTURES.
5. ENGINEER THE ELECTRICAL SYSTEM BASED ON THE EXACT LOCATIONS OF CONSTRUCTION, ELECTRICAL PANELS, ETC.
6. PROVIDE HEALTHY, VIGOROUS STOCK, GROWN IN A RECOGNIZED NURSERY IN ACCORDANCE WITH GOOD HORTICULTURE PRACTICE AND FREE OF INSECT INFESTATION.
7. SHIP LANDSCAPE MATERIALS WITH CERTIFICATES OF INSPECTION REQUIRED BY AUTHORITIES HAVING JURISDICTION. COMPLY WITH REGULATIONS APPLICABLE TO PACKAGING, TRANSPORTING AND HANDLING PLANTS.
8. PACKAGE STANDARD PRODUCTS WITH MANUFACTURER'S CERTIFIED ANALYSIS.
9. DURING AND AFTER INSTALLATION:
   9.1. PROTECT LANDSCAPE WORK FROM DAMAGE DUE TO LANDSCAPE OPERATIONS, OPERATIONS BY OTHER CONTRACTORS AND TRADES AND TRESPASSERS. MAINTAIN PROTECTION DURING INSTALLATION AND MAINTENANCE PERIODS. TREAT, REPAIR OR REPLACE DAMAGED PLANTS AS DIRECTED BY OWNER.
   9.2. DURING LANDSCAPE WORK, KEEP PAVEMENTS CLEAN AND WORK AREA IN AN ORDERLY CONDITION.
   9.3. REMOVE EXCESS EXCAVATION, ROCK AND RUBBISH FROM SITE AS WORK PROGRESSES.
10. PROTECT LANDSCAPE WORK AND MATERIALS FROM DAMAGE DUE TO LANDSCAPE OPERATIONS AND OTHER CONTRACTORS AND TRADES. MAINTAIN PROTECTION DURING INSTALLATION AND MAINTENANCE PERIODS. TREAT, REPAIR OR REPLACE DAMAGED PLANTS AS DI

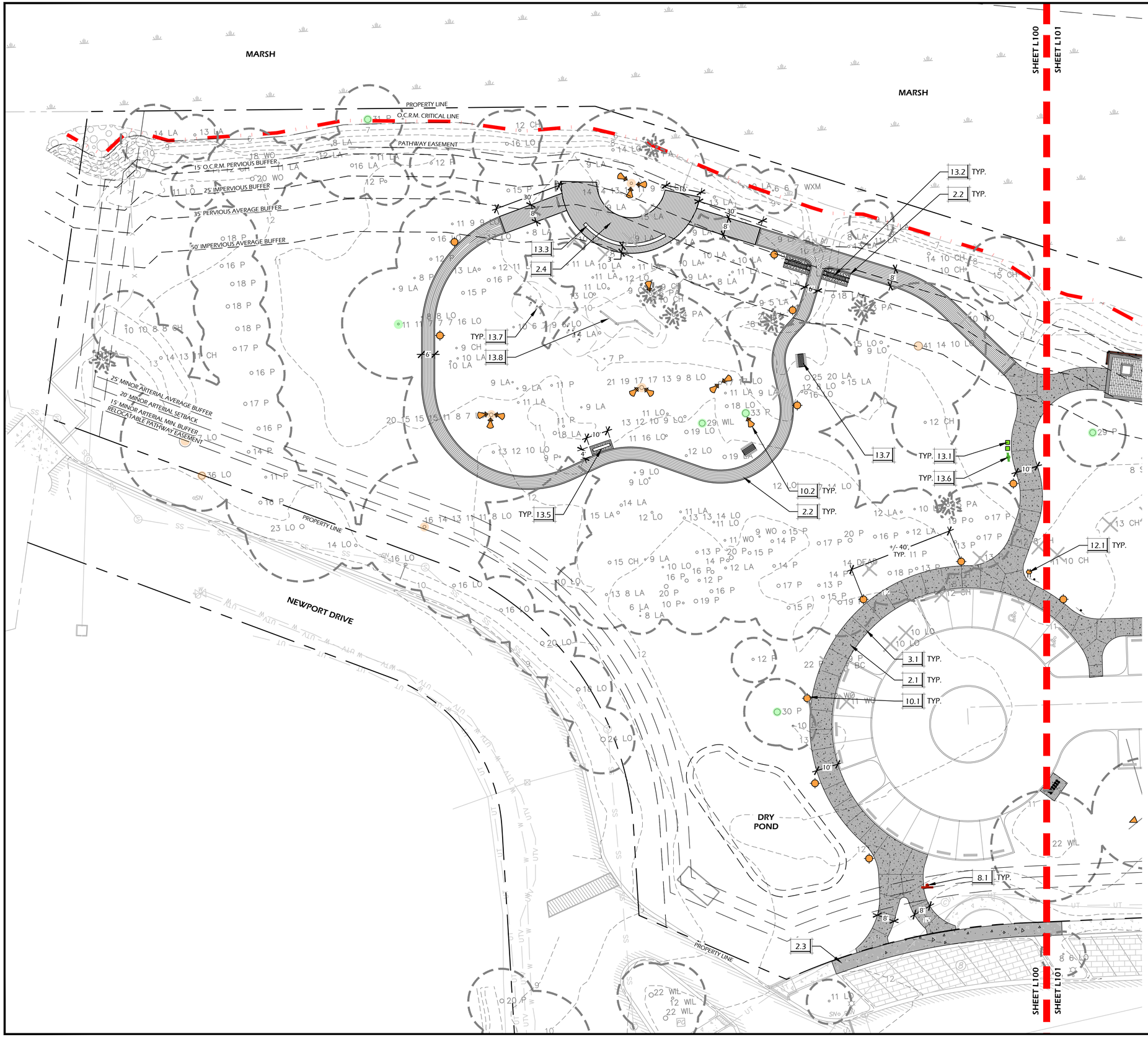

PAVING SCHEDULE

CALL-OUT	SYMB.	DESCRIPTION	DETAIL
2.1		TABBY WALK	1/L600
2.2		BRICK PAVERS	2/L600
2.3		CONCRETE WALK	3/L600
2.4		OBSERVATION PLATFORM	1/L608
NA		BORDERS (REFER TO DETAIL 2/L600)	2/L600
3.1		CONTROL JOINT	6/L600
3.2		EXPANSION JOINT	7/L600

NOTE: MATERIAL SYMBOLS / HATCHES ARE GRAPHIC IN NATURE AND ARE NOT INTENDED TO BE TO SCALE. REFER TO SITE DETAILS AND LAYOUT PLANS FOR SIZES AND DIMENSIONS.

SIGNAGE SCHEDULE

CALL-OUT	SYMB.	QTY.	DESCRIPTION	DETAIL
8.1		1	WAYFINDING/INFORMATION SIGN	1/L601

NOTE: SIGNAGE SYMBOLS ARE GRAPHIC IN NATURE AND ARE NOT INTENDED TO BE TO SCALE. REFER TO SITE DETAILS FOR SIZES AND DIMENSIONS.

LIGHTING SCHEDULE

CALL-OUT	SYMB.	QTY.	DESCRIPTION	DETAIL
10.1		11	BOLLARD LIGHT	6/L601
10.2		14	DOWN LIGHT	7/L601

NOTE: LIGHTING SYMBOLS ARE GRAPHIC IN NATURE AND ARE NOT INTENDED TO BE TO SCALE. REFER TO SITE DETAILS FOR SIZES AND DIMENSIONS.

UTILITIES SCHEDULE

CALL-OUT	SYMB.	QTY.	DESCRIPTION	DETAIL
12.1		1	G.F.I. OUTLET	1/L602

NOTE: UTILITY SYMBOLS ARE GRAPHIC IN NATURE AND ARE NOT INTENDED TO BE TO SCALE. REFER TO SITE DETAILS FOR SIZES AND DIMENSIONS.

SITE FURNISHINGS SCHEDULE

CALL-OUT	SYMB.	QTY.	DESCRIPTION	DETAIL
13.1		2	TRASH RECEPTACLE	4/L602
13.2		2	TRELLIS SWING	5/L602
13.3		1	CURVED BENCH	6/L602
13.4		1	DOG WASTE STATION	7/L602
13.5		1	BACKLESS BENCH	8/L602
13.6		2	PICNIC TABLE	1/L603
13.7		2	LOG STILTS	5/L607
13.8		1	LOG BALANCE BEAM	6/L607

NOTE: SITE FURNISHING SYMBOLS ARE GRAPHIC IN NATURE AND ARE NOT INTENDED TO BE TO SCALE. REFER TO SITE DETAILS FOR SIZES AND DIMENSIONS.

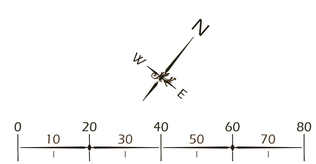

Wimer, Jones, Keefer Ltd.
landscape architecture
land planning
www.wjkltd.com
23 Promenade Street, Suite 201 | Bluffton, South Carolina | 29910 | ph 843.757.7411

© 2024 WJK LTD.
DESIGN CONCEPTS, DRAWING, SHEETS, LOGOS, SPECIFICATIONS, DETAILS, WRITTEN MATERIAL SHALL NOT BE USED OR REPRODUCED IN WHOLE OR IN PART IN ANY FORM WITHOUT PRIOR WRITTEN CONSENT OF WJK LTD.

THIS SHEET TO SCALE AT: 24"X36"

SITE DEVELOPMENT PLANS
FOR

SHELTER COVE - PHASE 2

39 SHELTER COVE LANE
TOWN OF HILTON HEAD ISLAND, SOUTH CAROLINA

DATE:	NOV 11, 2025
PROJECT NO.:	22062.15
DRAWN BY:	CK, ED
CHECKED BY:	BW

DRB SUBMITTAL SET, NOT FOR CONSTRUCTION

REVISIONS:

DRAWING TITLE
KEY SHEET - 01

DRAWING NUMBER
L100

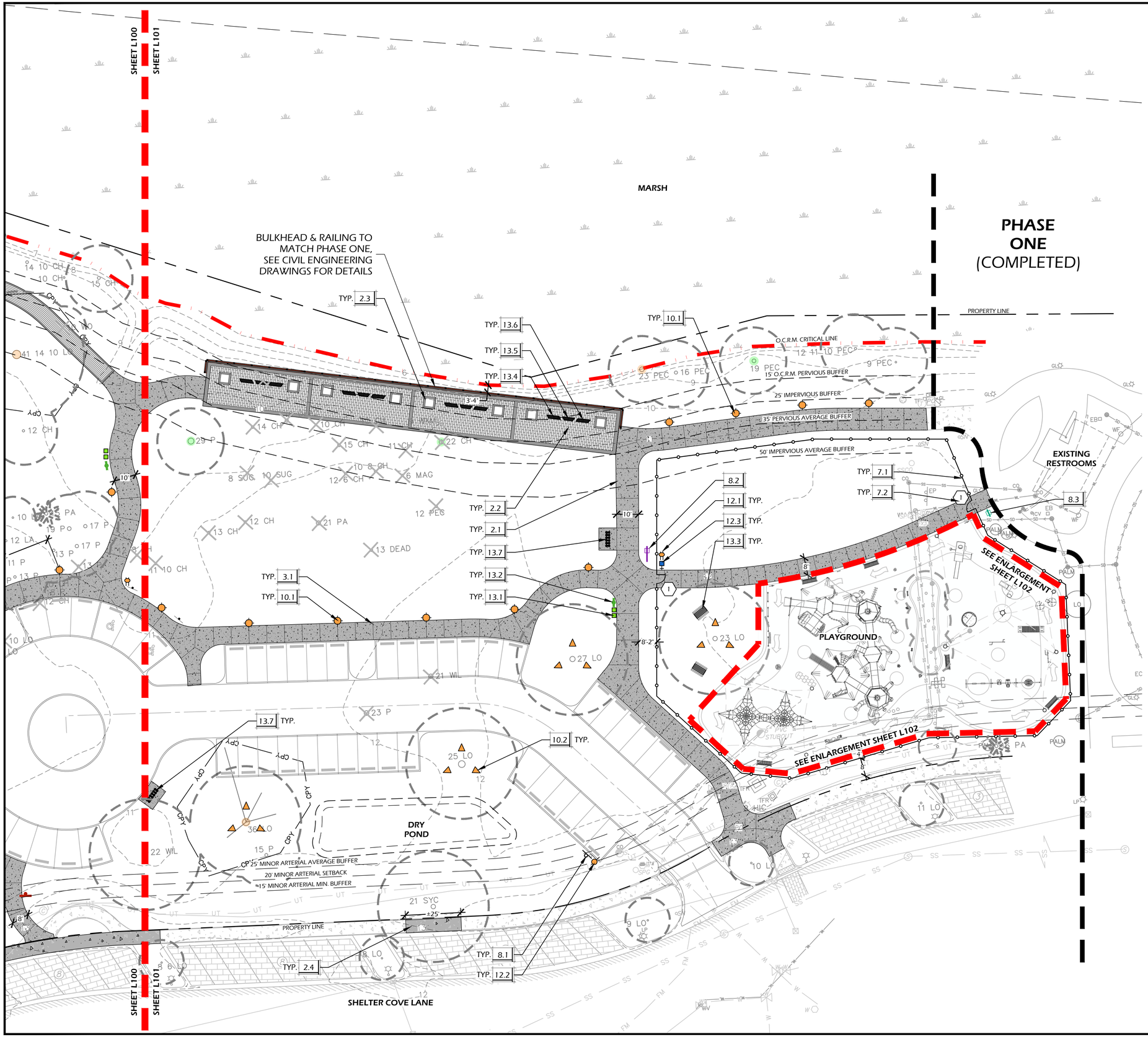

PAVING SCHEDULE

CALL-OUT	SYMB.	DESCRIPTION	DETAIL
2.1		TABBY WALK	1/L600
2.2		CONCRETE TILES AT PROMENADE	4/L600
2.3		PROMENADE PLANTER	5/L600
2.4		CONCRETE WALK	3/L600
3.1		CONTROL JOINT	6/L600
3.2		EXPANSION JOINT	7/L600

NOTE: MATERIAL SYMBOLS / HATCHES ARE GRAPHIC IN NATURE AND ARE NOT INTENDED TO BE TO SCALE. REFER TO SITE DETAILS AND LAYOUT PLANS FOR SIZES AND DIMENSIONS.

FENCING, GATES, BARRIERS SCHEDULE

CALL-OUT	SYMB.	DESCRIPTION	DETAIL
7.1		PLAYGROUND FENCE	8/L600
7.2	1	5' SINGLE GATE ARCHED, JERITH AERO ACCENT GATE, OPENING 5', STYLE #202	NA

SIGNAGE SCHEDULE

CALL-OUT	SYMB.	QTY.	DESCRIPTION	DETAIL
8.1		1	EV CHARGING SIGN	2/L601
8.2		1	PRIMARY PLAYGROUND SIGN	3/L601
8.3		1	SECONDARY PLAYGROUND SIGN	4/L601

NOTE: SIGNAGE SYMBOLS ARE GRAPHIC IN NATURE AND ARE NOT INTENDED TO BE TO SCALE. REFER TO SITE DETAILS FOR SIZES AND DIMENSIONS.

LIGHTING SCHEDULE

CALL-OUT	SYMB.	QTY.	DESCRIPTION	DETAIL
10.1		10	BOLLARD LIGHT	6/L601
10.2		12	UP LIGHT	8/L601

NOTE: LIGHTING SYMBOLS ARE GRAPHIC IN NATURE AND ARE NOT INTENDED TO BE TO SCALE. REFER TO SITE DETAILS FOR SIZES AND DIMENSIONS.

UTILITIES SCHEDULE

CALL-OUT	SYMB.	QTY.	DESCRIPTION	DETAIL
12.1		1	G.F.I. OUTLET	1/L602
12.2		1	EV CHARGING STATION	2/L602
12.3		1	HOSE BIB	3/L602

NOTE: UTILITY SYMBOLS ARE GRAPHIC IN NATURE AND ARE NOT INTENDED TO BE TO SCALE. REFER TO SITE DETAILS FOR SIZES AND DIMENSIONS.

SITE FURNISHINGS SCHEDULE

CALL-OUT	SYMB.	QTY.	DESCRIPTION	DETAIL
13.1		2	TRASH RECEPTACLE	4/L602
13.2		1	DOG WASTE STATION	7/L602
13.3		2	PICNIC TABLE	1/L603
13.4		4	LEFT BENCH	2/L603
13.5		4	RIGHT BENCH	3/L603
13.6		4	WEDGE BENCH	4/L603
13.7		2	BIKE RACK	5/L603

NOTE: SITE FURNISHING SYMBOLS ARE GRAPHIC IN NATURE AND ARE NOT INTENDED TO BE TO SCALE. REFER TO SITE DETAILS FOR SIZES AND DIMENSIONS.

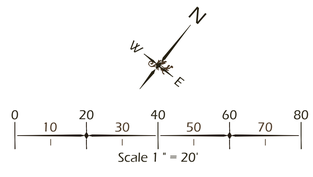

Wimer, Jones, Keefer Ltd.
landscape architecture
land planning
www.wjkltd.com
23 Promenade Street, Suite 201 | Bluffton, South Carolina | 29910 | ph 843.757.7411

© 2024 WJK LTD.
DESIGN CONCEPTS, DRAWING, SHEETS, LOGOS, SPECIFICATIONS, DETAILS, WRITTEN MATERIAL SHALL NOT BE USED OR REPRODUCED IN WHOLE OR IN PART IN ANY FORM WITHOUT PRIOR WRITTEN CONSENT OF WJK LTD.

THIS SHEET TO SCALE AT: 24"X36"

SITE DEVELOPMENT PLANS
FOR

SHELTER COVE - PHASE 2

39 SHELTER COVE LANE
TOWN OF HILTON HEAD ISLAND, SOUTH CAROLINA

DATE:	NOV 11, 2025
PROJECT NO.:	22062.15
DRAWN BY:	CK, ED
CHECKED BY:	BW

DRB SUBMITTAL SET, NOT FOR CONSTRUCTION

REVISIONS:

DRAWING TITLE
KEY SHEET - 02

DRAWING NUMBER
L101

PAVING SCHEDULE

CALL-OUT	SYMB.	DESCRIPTION	DETAIL
2.1		PLAY SURFACE	6/L603
2.2		FLUSH CONCRETE CURB A	7/L603
2.3		FLUSH CONCRETE CURB B	8/L603

NOTE: MATERIAL SYMBOLS / HATCHES ARE GRAPHIC IN NATURE AND ARE NOT INTENDED TO BE TO SCALE. REFER TO SITE DETAILS AND LAYOUT PLANS FOR SIZES AND DIMENSIONS.

SITE DETAILS LEGEND

CALL-OUT	DESCRIPTION	DETAIL
2.4	STEPPING STONE	9/L603
8.1	RISK MANAGEMENT SIGN	1/L604
8.2	5-12 WELCOME SIGN	2/L604
8.3	2-12 WELCOME SIGN	3/L604
9.1	SHADE SAIL	4/L604
13.1	BEST BUDDIES BENCH	5/L604
16.1	COMMUNITY HELPER	6/L604
16.2	GARDEN WALL	7/L604
16.3	MOUND W/ SLIDE & TUNNEL	1/L605
16.4	CURIOSITY THRILLED THE CAT	2/L605
16.5	INCLUSIVE WHIRL	3/L605
16.6	MOMENTUM CORRIDOR	4/L605
16.7	MY CUP OF TEA	5/L605
16.8	SWING	6/L605
16.9	TRANQUILITY CENTER	7/L605
16.10	BARREL RIDE	8/L605
16.11	INCLUSIVE SEESAW	9/L605
16.12	NET CLIMBER	1/L606
16.13	SADDLE SEAT	2/L606
16.14	PLAY STRUCTURE	3/L606
16.15	SENSORY WALL	4/L606
16.16	LARGE BABEL	5/L606
16.17	CADENZA	6/L606
16.18	CATTAILS	7/L606
16.19	CONGAS	8/L606
16.20	SMALL BABEL	9/L606
16.21	FREECHIMES	1/L607
16.22	TEMPLE BLOCK TREE	2/L607

0 5 10 15 20 25 30 35 40

Scale 1 " = 10'

Wimer, Jones, Keefer Ltd.
landscape architecture
land planning
www.wjkld.com
23 Promenade Street, Suite 201 | Bluffton, South Carolina | 29910 | ph 843.757.7411

© 2024 WJK LTD.
DESIGN CONCEPTS, DRAWING, SHEETS, LOGOS, SPECIFICATIONS, DETAILS, WRITTEN MATERIAL SHALL NOT BE USED OR REPRODUCED IN WHOLE OR IN PART IN ANY FORM WITHOUT PRIOR WRITTEN CONSENT OF WJK LTD.

THIS SHEET TO SCALE AT: 24"X36"

SITE DEVELOPMENT PLANS
FOR

SHELTER COVE - PHASE 2

39 SHELTER COVE LANE
TOWN OF HILTON HEAD ISLAND, SOUTH CAROLINA

DATE:	NOV 11, 2025
PROJECT NO.:	22062.15
DRAWN BY:	CK, ED
CHECKED BY:	BW

DRB SUBMITTAL SET, NOT FOR CONSTRUCTION

REVISIONS:

DRAWING TITLE
KEY SHEET - 03

DRAWING NUMBER
L102

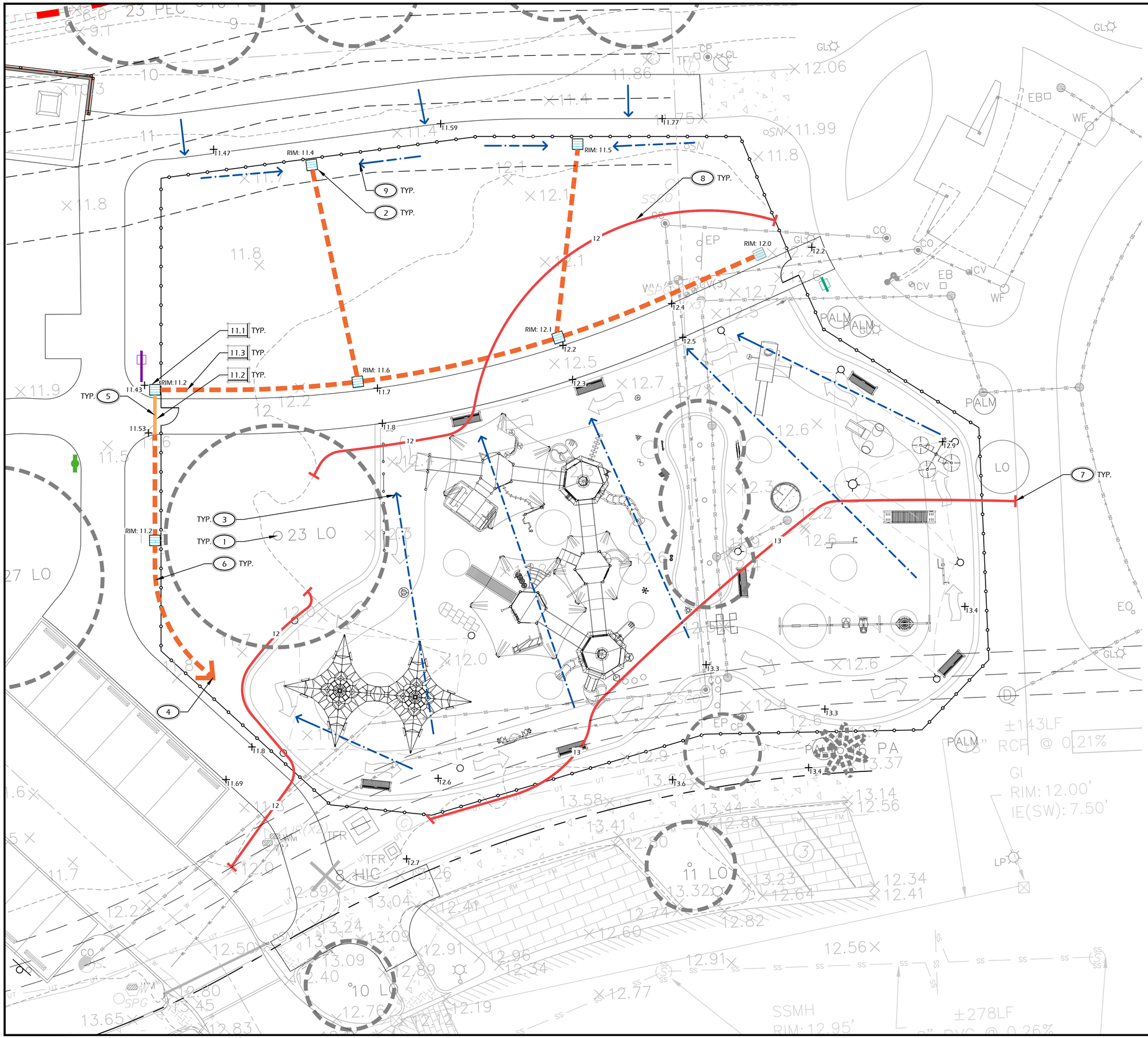

LANDSCAPE DRAINAGE LEGEND

CALL-OUT	SYMB.	DESCRIPTION	DETAIL
11.1		18" AREA DRAIN	3/L607
11.2		6" H.D.P.E. SOLID	N/A
11.3		6" FRENCH DRAIN	4/L607

NOTE: DRAINAGE SYMBOLS ARE GRAPHIC IN NATURE AND ARE NOT INTENDED TO BE TO SCALE. REFER TO SITE DETAILS FOR SIZES AND DIMENSIONS.

GRADING LEGEND

SYMB.	DESCRIPTION
+	SPOT GRADE
	DRAINAGE ARROW
	PROPOSED CONTOUR MAJOR
	PROPOSED CONTOUR MINOR
	EXISTING GRADE

GRADING ABBREVIATIONS

ABBR.	DESCRIPTION	ABBR.	DESCRIPTION
BC	BOTTOM OF CURB	HP	HIGH POINT
BS	BOTTOM OF STEP	RIM	TOP OF DRAIN
BW	BOTTOM OF WALL	TC	TOP OF CURB
FFE	FINISHED FLOOR ELEVATION	TS	TOP OF STEP
FG	FINISHED GRADE	TW	TOP OF WALL
LP	LOW POINT		

GRADING REFERENCE NOTES:

1. MINIMIZE DISTURBANCE AROUND TREES TO REMAIN.
2. PITCH TO DRAIN INLET AT 2% MIN. (LAWN AREAS)
3. PITCH TO DRAIN INLET AT 1% MIN., 2% MAX. (HARDSCAPE AREAS).
4. CONNECT FRENCH DRAINS TO DRAINAGE STRUCTURE, REFER TO CIVIL ENGINEERS PLANS FOR STRUCTURE LOCATION. FIELD ADJUST FRENCH DRAIN LOCATION TO ENSURE PROPER CONNECTION.
5. ALL PIPING UNDER HARDSCAPE SHALL BE SOLID H.D.P.E. PIPES.
6. FIELD LOCATE DRAIN LINE TO AVOID EXISTING TREE ROOTS.
7. TIE INTO EXISTING GRADE. MEET SMOOTHLY AND EVENLY.
8. FEATHER BOTTOM OF SLOPE SMOOTHLY TO MEET EXISTING CONDITIONS.
9. DIRECT STORMWATER TOWARDS STREET OR EXISTING DRAINAGE DITCH, DRAINAGE SHALL NOT BE DIRECTED TOWARDS ADJACENT PROPERTY. **CONTRACTOR SHALL PROVIDE SUPPLEMENTAL AREA DRAINS, FRENCH DRAINS, AND DRY WELLS AS REQUIRED TO PROMOTE PROPER STORMWATER DRAINAGE, REFER TO DETAILS.**

N

W E

0 5 10 15 20 25 30 35 40

Scale 1" = 10'

Wimer, Jones, Keefer Ltd.
landscape architecture
land planning
www.wjkltd.com
23 Promenade Street, Suite 201 | Bluffton, South Carolina | 29910 | ph 843.757.7411

© 2024 WJK LTD.
DESIGN CONCEPTS, DRAWING, SHEETS, LOGOS, SPECIFICATIONS, DETAILS, WRITTEN MATERIAL SHALL NOT BE USED OR REPRODUCED IN WHOLE OR IN PART IN ANY FORM WITHOUT PRIOR WRITTEN CONSENT OF WJK LTD.

THIS SHEET TO SCALE AT: 24"X36"

SITE DEVELOPMENT PLANS
FOR

SHELTER COVE - PHASE 2

39 SHELTER COVE LANE
TOWN OF HILTON HEAD ISLAND, SOUTH CAROLINA

DATE:	NOV 11, 2025
PROJECT NO.:	22062.15
DRAWN BY:	CK, ED
CHECKED BY:	BW

DRB SUBMITTAL SET, NOT FOR CONSTRUCTION

REVISIONS:

DRAWING TITLE
GRADING PLAN

DRAWING NUMBER
L300



PLANTING DETAILS

CALL-OUT	DESCRIPTION	DETAIL
14.1	TREE PLANTING	1/L502
14.2	PALM TREE PLANTING	2/L502
14.3	SHRUB PLANTING	3/L502
14.4	GROUND COVER PLANTING	4/L502
14.5	ROOT BARRIER	6/L502

SOD AND MULCH LEGEND

SYMB.	DESCRIPTION	DETAIL
	SOD	NA
	PINE STRAW (SEE TO **NOTE 5** BELOW)	NA
	EWF PLAYGROUND MULCH (SEE TO **NOTE 8** BELOW)	7/L607

NOTE: REFER TO PLANT SCHEDULE, **SHEET L502**, FOR AREA/QUANTITIES AND PRODUCT SPECIFICATIONS.

PLANT KEY LEGEND

Abbrev	Botanical Name	Common Name
TREES		
SABP	Sabal palmetto	Cabbage Palm
QUEV	Quercus virginiana	Live Oak
UNDERSTORY TREES		
ILEC	Ilex cassine	Dahoon Holly
ILEO	Ilex opaca	American Holly
ILEV	Ilex vomitoria 'Shadows Female'	Shadows Female Yaupon Holly
SHRUBS		
ILLP	Illicium parviflorum	Yellow Anise
LORC	Loropetalum chinense 'Kurobijin' PP #23,176	Cerise Charm' Loropetalum
PODM	Podocarpus macrophyllus	Podocarpus
PODP	Podocarpus macrophyllus 'Pringles Dwarf'	Dwarf Podocarpus
SERS	Serenoa repens 'Silver'	Silver Saw Palmetto
VIBS	Viburnum obovatum 'Mrs. Schiller's Delight'	Mrs. Schiller's Delight' Viburnum
ORNAMENTAL GRASSES & FERNS		
DRYE	Dryopteris erythrosora	Autumn Fern
MUHC	Muhlenbergia capillaris	Pink Muhly Grass
GROUND COVERS, VINES & PERENNIALS		
LANC	Lantana 'Chapel Hill Yellow' PP19548	Chapel Hill Yellow Lantana
LIRB	Liriope muscari 'Super Blue'	Super Blue Liriope
TRAA	Trachelospermum asiaticum	Asiatic Jasmine

PLANTING REFERENCE NOTES:

1. EXISTING VEGETATION TO REMAIN OUTSIDE GRADING LIMITS UNLESS NOTED OTHERWISE.
2. EXISTING TREES TO REMAIN UNLESS NOTED OTHERWISE; SEE CIVIL ENGINEER'S PLANS FOR **TREE REMOVAL.**
3. UNDISTURBED BUFFER.
4. REMOVE ALL GROUND PLANE VEGETATION AND DEAD LIMBS UNLESS OTHERWISE NOTED BY LANDSCAPE ARCHITECT.
5. SELECTIVELY THIN AND UNDERBRUSH, REMOVE DEAD LIMBS AND PINE STRAW DISTURBED AREAS.
6. CAREFULLY EXCAVATE SHRUB PITS IN VICINITY OF EXISTING TREES, WITHOUT DISTURBING TREE ROOTS.
7. CLEAR, GRADE AND PREP ALL SOD AREAS (SEE SOD AND MULCH LEGEND) PER GENERAL NOTES.
8. UNDERBRUSH AND CLEAR ALL GROUND VEGETATION AROUND LOG PLAY STRUCTURES. MULCH WITH EWF PLAYGROUND MULCH TO A DEPTH OF 6".
9. FIELD VERIFY LOCATION OF ELECTRICAL TRANSFORMERS AND FIELD LOCATE PLANTINGS WITH LANDSCAPE ARCHITECTS PRIOR TO PLANTING.

Winer, Jones, Keefer Ltd.
landscape architecture
land planning
www.wjkld.com
23 Promenade Street, Suite 201 | Bluffton, South Carolina | 29910 | ph 843.757.7411

© 2024 WJK LTD.
DESIGN CONCEPTS, DRAWING, SHEETS, LOGOS, SPECIFICATIONS, DETAILS, WRITTEN MATERIAL SHALL NOT BE USED OR REPRODUCED IN WHOLE OR IN PART IN ANY FORM WITHOUT PRIOR WRITTEN CONSENT OF WJK LTD.

THIS SHEET TO SCALE AT: 24"X36"

SITE DEVELOPMENT PLANS
FOR

SHELTER COVE - PHASE 2

39 SHELTER COVE LANE
TOWN OF HILTON HEAD ISLAND, SOUTH CAROLINA

DATE:	NOV 11, 2025
PROJECT NO.:	22062.15
DRAWN BY:	CK, ED
CHECKED BY:	BW

DRB SUBMITTAL SET, NOT FOR CONSTRUCTION

REVISIONS:

DRAWING TITLE
PLANTING PLAN - 01

DRAWING NUMBER
L500

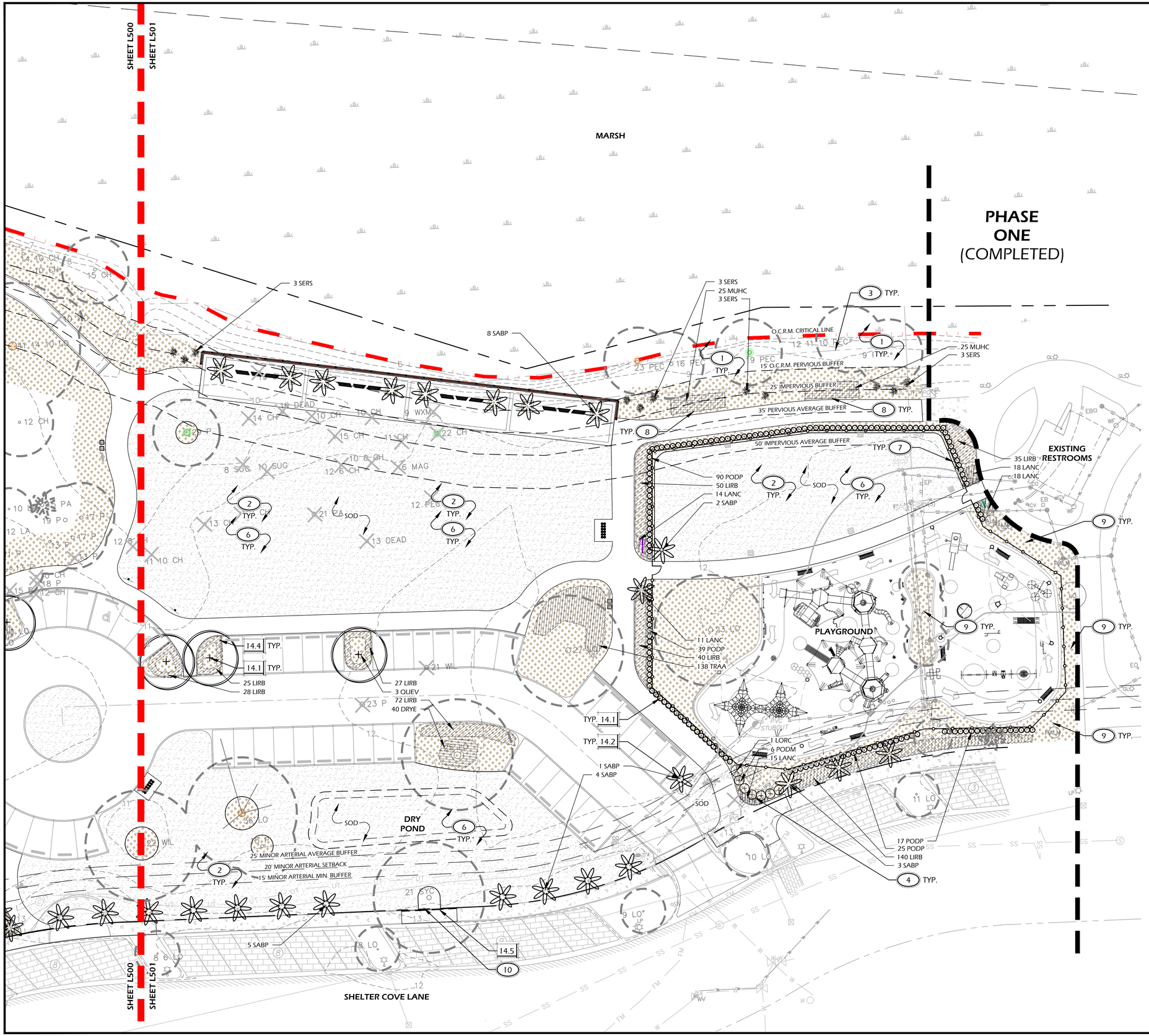

PLANTING DETAILS		
CALL-OUT	DESCRIPTION	DETAIL
14.1	TREE PLANTING	1/L502
14.2	PALM TREE PLANTING	2/L502
14.3	SHRUB PLANTING	3/L502
14.4	GROUND COVER PLANTING	4/L503
14.5	ROOT BARRIER	6/L502

SOD AND MULCH LEGEND	
SYMB.	DESCRIPTION
	SOD
	PINE STRAW (REFER TO **NOTE 3** BELOW)

NOTE: REFER TO PLANT SCHEDULE, **SHEET L502**, FOR AREA/QUANTITIES AND PRODUCT SPECIFICATIONS.

PLANT KEY LEGEND

Abbrev	Botanical Name	Common Name
TREES		
SABP	Sabal palmetto	Cabbage Palm
QUEV	Quercus virginiana	Live Oak
UNDERSTORY TREES		
ILEC	Ilex cassine	Dahoon Holly
ILEO	Ilex opaca	American Holly
ILEV	Ilex vomitoria 'Shadows Female'	Shadows Female Yaupon Holly
SHRUBS		
ILLP	Illicium parviflorum	Yellow Anise
LORC	Loropetalum chinense 'Kurobijin' PP #23,176	Cerise Charm' Loropetalum
PODM	Podocarpus macrophyllus	Podocarpus
PODP	Podocarpus macrophyllus 'Pringles Dwarf'	Dwarf Podocarpus
SERS	Serenoa repens 'Silver'	Silver Saw Palmetto
VIBS	Viburnum obovatum 'Mrs. Schiller's Delight'	Mrs. Schiller's Delight' Viburnum
ORNAMENTAL GRASSES & FERNS		
DRYE	Dryopteris erythrosora	Autumn Fern
MUHC	Muhlenbergia capillaris	Pink Muhly Grass
GROUND COVERS, VINES & PERENNIALS		
LANC	Lantana 'Chapel Hill Yellow' PP19548	Chapel Hill Yellow Lantana
LIRB	Liriope muscari 'Super Blue'	Super Blue Liriope
TRAA	Trachelospermum asiaticum	Asiatic Jasmine

PLANTING REFERENCE NOTES:

1. EXISTING VEGETATION TO REMAIN OUTSIDE GRADING LIMITS UNLESS NOTED OTHERWISE.
2. REMOVE ALL VEGETATION FROM AREAS NOTED FOR SOD INSTALLATION (SEE SOD AND MULCH LEGEND).
3. SELECTIVELY THIN AND UNDERBRUSH, REMOVE DEAD LIMBS AND PINE STRAW DISTURBED AREAS.
4. COORDINATE SHRUB LAYOUT WITH EXISTING UTILITIES. REPORT ANY CONFLICTS TO LANDSCAPE ARCHITECT.
5. PROTECT AREA DRAINS FROM CLOGGING DURING INSTALLATION OF PLANTS AND MULCH. MAINTAIN FUNCTIONALITY AND POSITIVE PITCH TO DRAIN.
6. CLEAR, GRADE AND PREP ALL SOD AREAS (SEE SOD AND MULCH LEGEND) PER GENERAL NOTES.
7. EXTEND MULCH LINE 2' INSIDE FENCE.
8. MAINTAIN 5' BETWEEN EDGE OF SIDEWALK AND MUHC PLANTINGS.
9. EXISTING LANDSCAPE TO REMAIN.
10. ROOT PRUNE ROOTS THAT WILL CAUSE POTENTIAL CONFLICT WITH NEW DRIVE AISLES AND PERVIOUS PARKING SPACES. CONTRACTOR TO COORDINATE WITH OWNER ON LANDSCAPE ARCHITECT PRIOR TO PRUNING.

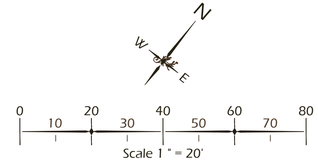

Wimer, Jones, Keefer Ltd.
landscape architecture
land planning
www.wjkld.com
23 Promenade Street, Suite 201 | Bluffton, South Carolina | 29910 | ph 843.757.7411

© 2024 WJK LTD.
DESIGN CONCEPTS, DRAWING, SHEETS, LOGOS, SPECIFICATIONS, DETAILS, WRITTEN MATERIAL SHALL NOT BE USED OR REPRODUCED IN WHOLE OR IN PART IN ANY FORM WITHOUT PRIOR WRITTEN CONSENT OF WJK LTD.

THIS SHEET TO SCALE AT: 24"X36"

SITE DEVELOPMENT PLANS
FOR

SHELTER COVE - PHASE 2

39 SHELTER COVE LANE
TOWN OF HILTON HEAD ISLAND, SOUTH CAROLINA

DATE:	NOV 11, 2025
PROJECT NO.:	22062.15
DRAWN BY:	CK, ED
CHECKED BY:	BW

DRB SUBMITTAL SET, NOT FOR CONSTRUCTION

REVISIONS:

DRAWING TITLE
PLANTING PLAN - 02

DRAWING NUMBER
L501

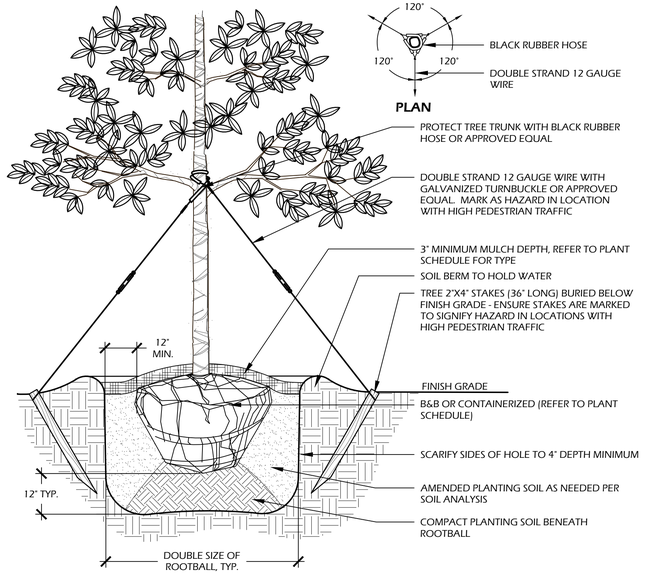

NOTES:
1. TREE STAKING OPTIONAL, HOWEVER, LANDSCAPE CONTRACTOR RESPONSIBLE FOR MAINTAINING TREES IN AN UPRIGHT (90 DEGREE/ PERPENDICULAR) POSITION FOR 1 YEAR AFTER PLANTING IS COMPLETE OR UNTIL TREE ROOT SYSTEM IS FULLY ESTABLISHED AND STURDY. FINAL TREE STAKING DETAILS AND PLACEMENT TO BE APPROVED BY OWNER'S REPRESENTATIVE.
2. CONTRACTOR SHALL ASSURE PERCOLATION OF ALL PLANTING PITS PRIOR TO INSTALLATION.
3. IN SEMI-IMPERVIOUS SOIL CONDITIONS, ROOTBALL ELEVATION SHALL BE 2" ABOVE FINISH GRADE. COORDINATE WITH OWNER'S REPRESENTATIVE PRIOR TO SETTING ROOTBALL ELEVATIONS.

1 // L502 TREE PLANTING
SCALE: N.T.S.

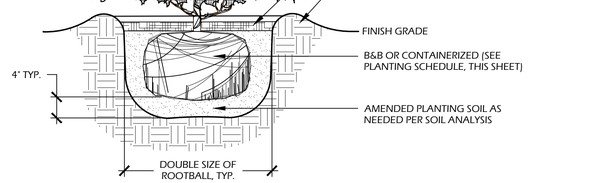

NOTES:
1. WHEN GROUNDCOVERS AND SHRUBS ARE USED IS MASSES, ENTIRE BED TO BE EXCAVATED TO RECEIVE PLANTING SOIL AND PLANT MATERIAL.
2. CONTRACTOR SHALL ASSURE PERCOLATION OF ALL PLANTING PITS PRIOR TO INSTALLATION.
3. IN SEMI-IMPERVIOUS SOIL CONDITIONS, ROOTBALL ELEVATION SHALL BE ±2" ABOVE FINISH GRADE. COORDINATE WITH OWNER'S REPRESENTATIVE PRIOR TO SETTING ROOTBALL ELEVATIONS.

3 // L502 SHRUB PLANTING
SCALE: N.T.S.

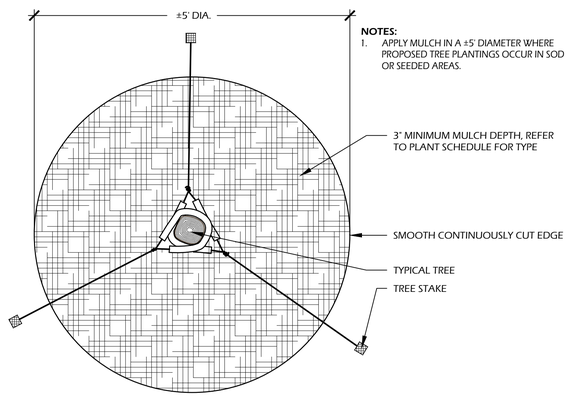

NOTES:
1. APPLY MULCH IN A ±5' DIAMETER WHERE PROPOSED TREE PLANTINGS OCCUR IN SOD OR SEEDED AREAS.

5 // L502 TREE STAKING
SCALE: N.T.S.

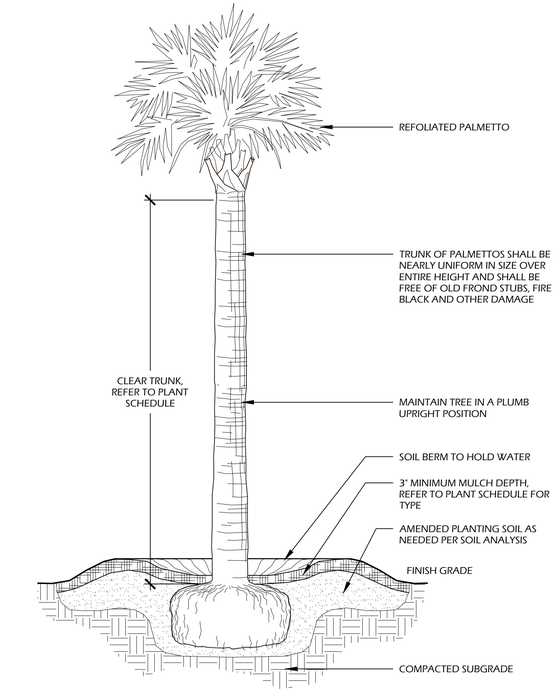

NOTES:
1. FINAL TREE STAKING DETAILS AND PLACEMENT TO BE APPROVED BY OWNER OR OWNER'S REPRESENTATIVE.
2. CONTRACTOR SHALL ASSURE PERCOLATION OF ALL PLANTING PITS PRIOR TO INSTALLATION.
3. SABAL PALMETTOS SHALL BE REFOLIATED, PROTECT CABBAGE HEAD FROM DAMAGE.

2 // L502 PALM TREE PLANTING
SCALE: N.T.S.

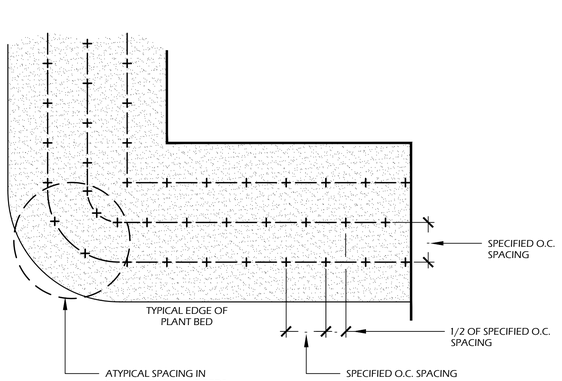

NOTE:
1. EXCAVATE ENTIRE BED SPECIFIED FOR GROUNDCOVER PLANTING TO A DEPTH OF 12"

4 // L502 GROUND COVER PLANTING
SCALE: N.T.S.

PLANT SCHEDULE:

Quantity	Abbrev	Botanical Name	Common Name	Height	Spread	Container	Cal./Spacing	Notes
TREES								
28	SABP	Sabal palmetto	Cabbage Palm	12'-16'	-	Cont.	-	Refoliated, full clear trunk, refer to plan for heights
6	QUEV	Quercus virginiana	Live Oak	14'-16'	6'-8'	Cont.	4"	Full
UNDERSTORY TREES								
3	ILEC	Ilex cassine	Dahoon Holly	6'-7'	3'-4'	15 gal.	1"	Full
6	ILEO	Ilex opaca	American Holly	6'-7'	3'-4'	15 gal.	1"	Tree form, Multi-stem, Full
6	ILEV	Ilex vomitoria 'Shadows Female'	Shadows Female Yaupon Holly	5'-6'	3'-4'	15 gal.	1"	Tree form, Multi-stem, Full
SHRUBS								
5	ILLP	Illicium parviflorum	Yellow Anise	30"-36"	24"-30"	7 gal.	-	Full
35	LORC	Loropetalum chinense 'Kurobijin' PP #23,176	Cerise Charm' Loropetalum	30"-36"	24"-30"	7 gal.	-	Full
6	PODM	Podocarpus macrophyllus	Podocarpus	36"-42"	24"-30"	15 gal.	-	Full
171	PODP	Podocarpus macrophyllus 'Pringles Dwarf'	Dwarf Podocarpus	18"-24"	16"-20"	7 gal.	-	Full
12	SERS	Serenoa repens 'Silver'	Silver Saw Palmetto	24"-30"	24"-30"	15 gal.	-	Full, Silver Foliage
3	VIBS	Viburnum obovatum 'Mrs. Schiller's Delight'	Mrs. Schiller's Delight' Viburnum	30"-36"	24"-30"	7 gal.	-	Full
ORNAMENTAL GRASSES & FERNS								
40	DRYE	Dryopteris erythrosora	Autumn Fern	10"-12"	8"-12"	1 gal.	24" O.C.	Full
50	MUHC	Muhlenbergia capillaris	Pink Muhly Grass	14"-16"	10"-16"	1 gal.	30" O.C.	Full
GROUND COVERS, VINES & PERENNIALS								
141	LANC	Lantana 'Chapel Hill Yellow' PP19548	Chapel Hill Yellow Lantana	8"-12"	8"-12"	1 gal.	18" O.C.	Yellow Flowers, Full
417	LIRB	Liriope muscari 'Super Blue'	Super Blue Liriope	12"-16"	8"-12"	1 gal.	24" O.C.	Full
162	TRAA	Trachelospermum asiaticum	Asiatic Jasmine	4"-6"	12" runners	1 gal.	24" O.C.	Full
SOD & MULCH								
53,700	SOD-SF	-	Empire Zoysia Sod	-	-	-	-	-
50,450	MULCH-SF	Pine Straw - all disturbed areas	Pine Straw	-	-	-	-	-
2,050	MULCH-SF	EWF Playground Mulch	6" Depth	-	-	-	-	-

PLANT TABLE:

Trees Removed

	CAT. I			CAT. II					CAT. III	
Species Abbrev.	LO	LA	M	HIC	SUG	PEC	WLK	WOK	PLM	P
Caliper Inches	13 10 10	15 10 10 9 9 9 9 8	6	8	10 8	12	21	12 11 10	21	23 22 19 18 15 13
Species DBH Totals	33	79	6	8	18	12	21	33	21	110
Total DBH Inches	CAT. I	118		CAT. II			92		CAT. III	131

TREE LEGEND: **LO**-Live Oak, **LA**-Laurel Oak, **M**-Magnolia, **HIC**-Hickory, **SYC**-Sycamore, **SUG**-Sugar Berry, **PEC**-Pecan, **WLK**-Willow Oak, **WOK**-Water Oak, **PLM**-Palmetto, **P**-Loblolly Pine

Tree Mitigation Calculations

	CAT. I	CAT. II	CAT. III
# OF TREES TO BE REMOVED	12	8	7
TOTAL # OF DBH INCHES	**118**	**92**	**131**
CALCULATION	118 ÷ 10 = 11.8	92 ÷ 10 = 9.2	131 ÷ 10 = 13.1
# OF NEW TREES REQUIRED	**12**	**9**	**13**
# OF NEW TREES PROVIDED	**12**	**9**	**28**

UB 24-2 Specifications
24" DeepRoot® Tree Root Barrier
(Or approved equal)

SPECIFIED TREE ROOT BARRIER IS A MECHANICAL BARRIER AND ROOT DEFLECTOR USED TO PREVENT TREE ROOTS FROM DAMAGING HARDSCAPES AND LANDSCAPES. ASSEMBLED IN 24" (609 MM) LONG MODULES TO CREATE VARYING LENGTHS FOR LINEAR APPLICATIONS, OR PERIMETER SURROUND APPLICATIONS IN VARYING SIZES.

A. MATERIALS
I. THE CONTRACTOR SHALL FURNISH AND INSTALL TREE ROOT BARRIER AS SPECIFIED. THE TREE ROOT BARRIER SHALL BE EITHER PRODUCT #UB 24-2 AS MANUFACTURED BY DEEPROOT® GREEN INFRASTRUCTURE, LLC, 530 WASHINGTON STREET, SAN FRANCISCO, CA, WWW.DEEPROOT.COM (800.458.7668).

2. ROOT BARRIER SHALL BE RECYCLABLE, BLACK, INJECTION MOLDED PANELS WITH 0.80" (2.03 MM) WALL THICKNESS IN MODULES 24" (609 MM) LONG AND 24" (609 MM) DEEP.

3. ROOT BARRIER SHALL BE MANUFACTURED WITH 75% REPROCESSED POLYPROPYLENE WITH ADDED ULTRAVIOLET INHIBITORS.

4. ROOT BARRIER SHALL BE COMPRISED OF 24" (60.96 CM) PANELS. EACH PANEL SHALL HAVE NO LESS THAN FOUR (4) MOLDED INTEGRAL VERTICAL ROOT DIRECTING RIBS OF A MINIMUM 0.075" (1.90 MM) THICKNESS, PROTRUDING 1/2" (12.7 MM) AT 90° FROM INTERIOR OF THE BARRIER PANEL, SPACED 9" (152.4 MM) APART. (SEE DETAILS A & D)

5. ROOT BARRIER SHALL HAVE A DOUBLE TOP EDGE CONSISTING OF TWO PARALLEL, INTEGRAL, HORIZONTAL RIBS AT THE TOP OF THE PANEL AT 0.060" (1.52 MM) THICKNESS, 3/8" (9.53 MM) WIDE AND 1/4" (6.35 MM) APART WITH THE LOWER RIB ATTACHED TO THE VERTICAL ROOT DIRECTING RIBS (SEE DETAIL A).

6. ROOT BARRIER SHALL HAVE A MINIMUM OF TWELVE (12) ANTI-LIFT GROUND LOCK TABS CONSISTING OF INTEGRAL, HORIZONTAL RIDGES OF MINIMUM 0.075" (1.90 MM) THICKNESS IN THE SHAPE OF A SEGMENT OF AN OBLONG, THE 2" (50.8 MM) CHORD OF THE SEGMENT JOINING THE PANEL WALL AND THE SEGMENT, PROTRUDING 3/8" (9.53 MM) FROM THE PANEL. THE TWELVE GROUND LOCKS ON EACH PANEL SHALL BE ABOUT EQUALLY SPACED BETWEEN EACH OF THE VERTICAL ROOT DIRECTING RIBS (FOUR (4) BETWEEN EACH SET OF RIBS, SEE DETAILS B & D).

7. ROOT BARRIER SHALL HAVE AN INTEGRATED ZIPPER JOINING SYSTEM FOR ASSEMBLY BY SLIDING ONE PANEL INTO ANOTHER (SEE DETAIL C).

U.S. PATENTS: 5,305,549; AND 5,528,857. OTHER PATENTS PENDING.

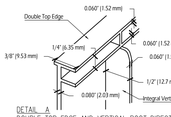

DETAIL A
DOUBLE TOP EDGE AND VERTICAL ROOT DIRECTING RIB

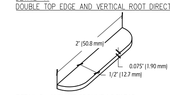

DETAIL B - ANTI-LIFT GROUND LOCK TAB



DETAIL C - ZIPPER JOINING SYSTEM

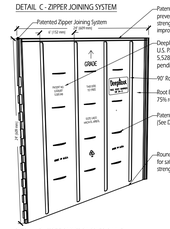

DETAIL D - TREE ROOT BARRIER PANEL

Surround Style Planting with Deeproot Universal Barriers

When selecting the Surround style planting application you will have the greatest success by following these simple steps as illustrated below:

A. Prepare the initial planting hole as illustrated below. This is based upon the combination of desired barrier diameter and depth. Consider if drainage devices or amendments are needed to correct any adverse soil or planting conditions in the backfill area.

B. Assemble the appropriate number of DeepRoot Universal Barrier panels. The vertical root deflecting ribs on the panel must face inward, toward the root ball. (This is very important, otherwise the roots will become girdled by traveling around the smooth walled surface)

C. Next place the barrier in the center of the planting hole, keeping in mind that the double top edge of the barrier should be positioned approximately 1/2" (13mm) above grade. This helps retard potential root overgrowth. Failing to position the top edge above grade can allow root overgrowth which can lead to uprooted hardscapes.

D. Backfill and compact with soil inside the barrier to the level where the bottom of the root ball will be when positioned correctly with the crown of the root ball approximately 1" (26mm) above grade.

E. Remove the tree from its container, or cut away the top portion of burlap and position in the center of the barrier. Complete the backfill of the soil. Distribute evenly to maintain the shape of the barrier and compact the backfill every 4"-6" (10cm-15cm). Roots will die quickly if left exposed to the elements so keep exposure of the roots to a minimum.

F. If staking or guying is required we recommend using the soft, safe and economical alternative to traditional wire and hose. ArborTie (see www.deeproot.com for details)

G. If the tree(s) will be subject to maintenance work such as lawn mowing or weed trimmers we strongly recommend the installation of ArborGard+ Tree Trunk Protectors which are placed around the base of young trees to protect them from damage by weed trimmers, lawn mowers and small rodents. (See www.deeproot.com)

H. Water and follow proper tree maintenance practices.

Trees do require care and nurturing after planting. Consult with your local supplier for proper care procedures for the species you are planting. The planting instructions given here are by no means a comprehensive guide. Rather they are general guidelines to planting with DeepRoot Barriers and a survey of current planting methods. Conditions will vary however and it is recommended that an Arborist be consulted before planting.

For additional information please visit our website at www.deeproot.com

For information regarding distributors please call: 1 800 ILV ROOT (458 7668). For help with drainage or other difficult installation questions please call DeepRoot Technical Support at: 1 800 ROOT TEK (766.8835).

A Typical Surround Planting Installation Using DeepRoot Universal Barrier

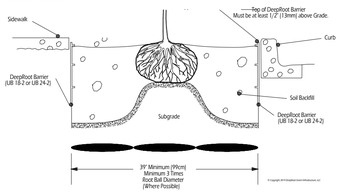

© 2024 WJK LTD.
DESIGN CONCEPTS, DRAWING, SHEETS, LOGOS, SPECIFICATIONS, DETAILS, WRITTEN MATERIAL SHALL NOT BE USED OR REPRODUCED IN WHOLE OR IN PART IN ANY FORM WITHOUT PRIOR WRITTEN CONSENT OF WJK LTD.
THIS SHEET TO SCALE AT: 24"X36"

Wimer, Jones, Keefer Ltd.
landscape architecture
land planning
www.wjkltd.com
23 Promenade Street, Suite 201 | Bluffton, South Carolina | 29910 | ph 843.757.7411

SITE DEVELOPMENT PLANS
FOR
SHELTER COVE - PHASE 2
39 SHELTER COVE LANE
TOWN OF HILTON HEAD ISLAND, SOUTH CAROLINA

DATE:	NOV 11, 2025
PROJECT NO.:	22062.15
DRAWN BY:	CK, ED
CHECKED BY:	BW

DRB SUBMITTAL SET, NOT FOR CONSTRUCTION

REVISIONS:

DRAWING TITLE
PLANT SCHEDULE AND DETAILS

DRAWING NUMBER
L502

6 // L502 ROOT BARRIER
SCALE: N.T.S.

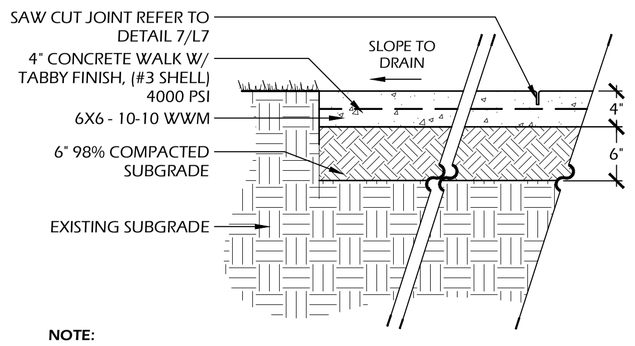

NOTE:
1. CONTRACTOR SHALL PROVIDE 3' X 3' SAMPLE OF CONCRETE WITH 2 SIZES OF OYSTER SHELL FINISH. INTENT IS TO MATCH EXISTING TABBY WALK IN PARK. SAMPLES SHALL BE APPROVED BY OWNER AND LANDSCAPE ARCHITECT.
2. CONTRACTOR TO CONFIRM CONCRETE AND SUBSURFACE THICKNESS PER SOILS REPORT.
3. PROVIDE MIN. 1% CROSS SLOPE ON ALL PAVED SURFACES FOR POSITIVE DRAINAGE.
4. SEE L100 SHEETS FOR WIDTHS OF WALKWAY AND SPECIAL JOINTS.
5. CONSTRUCT EXPANSION JOINTS WHERE WALKS MEET CURBS, STEPS, WALLS OR FIXED SLABS.

1 / L600 TABBY WALK
SCALE: 1" - 1'-0"

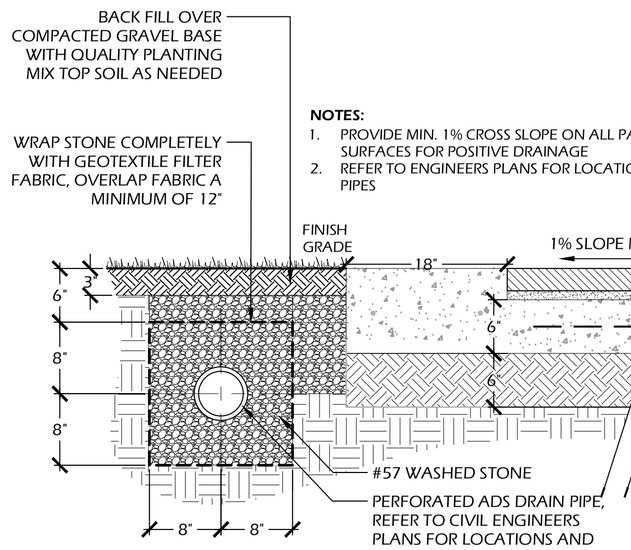

NOTES:
1. PROVIDE MIN. 1% CROSS SLOPE ON ALL PAVED SURFACES FOR POSITIVE DRAINAGE
2. REFER TO ENGINEERS PLANS FOR LOCATION OF DRAIN PIPES

TILE: STANDARD 2-1/2" THICK TILE
COLOR: #3 (60%), #6 (25%), #8 (15%)
SIZE: 9" X 36"
PATTERN: RUNNING BOND PERPENDICULAR TO BULKHEAD
JOINTS: ⅜" POLYMERIC SAND SWEPT AND SEALED
FINISH: SEALANT PER MANUFACTURER'S SPEC.

2 / L600 BRICK PAVERS
SCALE: 1" - 1'-0"

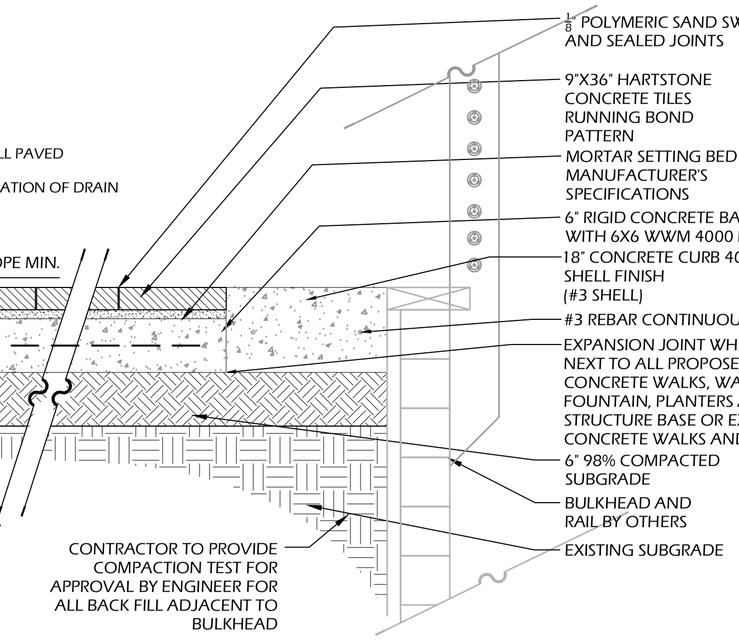

MANUFACTURER INFORMATION:

HARTSTONE
1801 TAYLOR AVE.
LOUISVILLE, KY 40213
PHONE: (502) 452.1331
WWW.HARTSTONETILE.COM

3 / L600 CONCRETE WALK
SCALE: 1" - 1'-0"

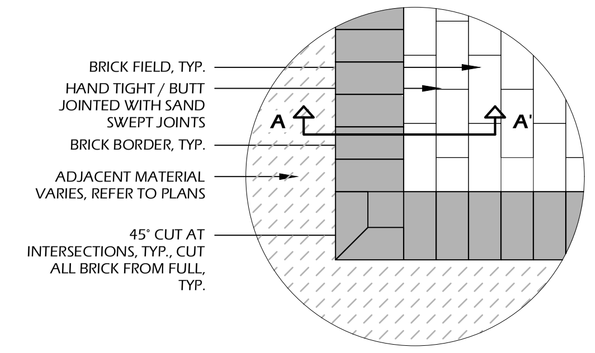

PLAN

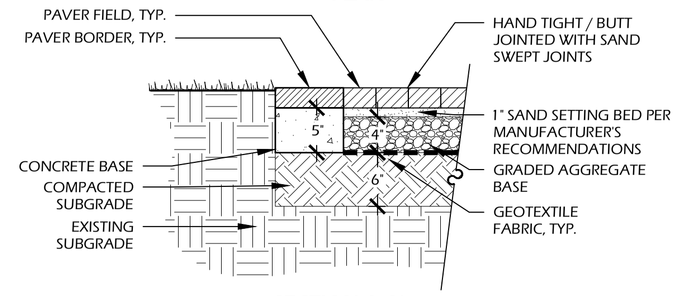

SECTION A-A'

BRICK MANUFACTURER INFORMATION:

MANUFACTURER: PINE HALL BRICK

PAVER: SQUARE EDGE 4"X8"
COLOR: 50% COCOA
50% FULL RANGE
PATTERN: RUNNING BOND FIELD (REFER TO PLAN, **SHEET L100**, FOR DIRECTION) WITH SINGLE HEADER COURSE BORDER
JOINTS: HAND TIGHT / BUTT JOINTED, SAND SWEPT

OTHER INFORMATION:

CONCRETE: 3,000 P.S.I. AT 28 DAYS
GEOTEXTILE FABRIC: TYPAR 3401 OR APPROVED EQUAL
SOIL COMPACTION: 95% STANDARD PROCTOR

NOTES:
1. PROVIDE 1% MIN., 2% MAX. CROSS SLOPE ON ALL PAVED SURFACES FOR POSITIVE DRAINAGE.
2. REFER TO PLAN **(SHEET L100)** FOR WIDTHS OF DRIVE AND LOCATION OF BRICK BORDERS.
3. CONTRACTOR SHALL COORDINATE BORDERS AND PATTERN WITH OWNER'S REPRESENTATIVE PRIOR TO CONSTRUCTION.
4. UPON REQUEST, CONTRACTOR SHALL PROVIDE 4'X4' PAVING PANELS OF ALTERNATIVE COLORS PRIOR TO CONSTRUCTION FOR APPROVAL BY OWNER OR LANDSCAPE ARCHITECT.

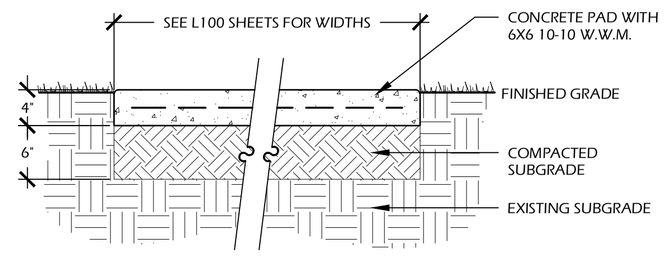

SECTION A-A'

CONCRETE INFORMATION:

CONCRETE: 3,000 P.S.I. AT 28 DAYS
FINISH: LIGHT BROOM FINISH

SOIL INFORMATION:

COMPACTED SUBGRADE: 95% STANDARD PROCTOR

NOTES:
1. PROVIDE 1% MIN, 2% MAX. CROSS SLOPE ON ALL PAVED SURFACES FOR POSITIVE DRAINAGE.
2. CONSTRUCT EXPANSION JOINTS WHERE WALK MEETS CURBS, STEPS, WALLS OR FIXED SLABS.

4 / L600 CONCRETE TILE AT PROMENADE
SCALE: 1" - 1'-0"

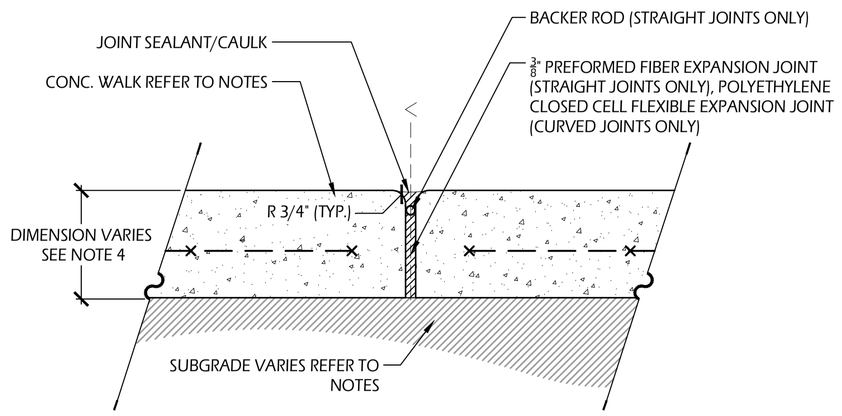

NOTES:
1. LOCATE EXPANSION JOINTS AT 20' O.C. MIN. OR 50' O.C. MAX. OR AS INDICATED ON L100 SHEETS, AND PROVIDE EXPANSION JOINTS AT LOCATIONS ADJACENT TO ALL EXISTING CONCRETE.
2. FOR DEPTHS OF WALKWAY AND SUBGRADE REFER TO DETAILS 1/L600.

5 / L600 PROMENADE PLANTER
SCALE: 1" - 1'-0"

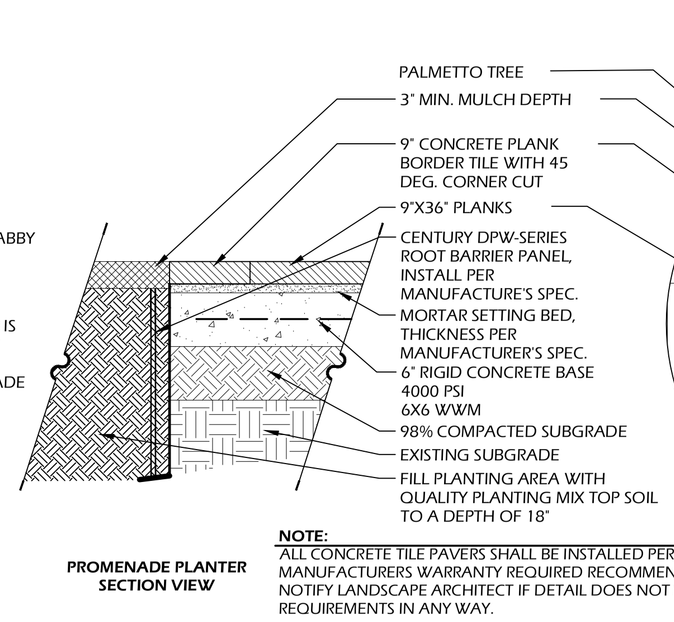

PROMENADE PLANTER SECTION VIEW

NOTE:
ALL CONCRETE TILE PAVERS SHALL BE INSTALLED PER MANUFACTURERS WARRANTY REQUIRED RECOMMENDATIONS - NOTIFY LANDSCAPE ARCHITECT IF DETAIL DOES NOT MEET REQUIREMENTS IN ANY WAY.

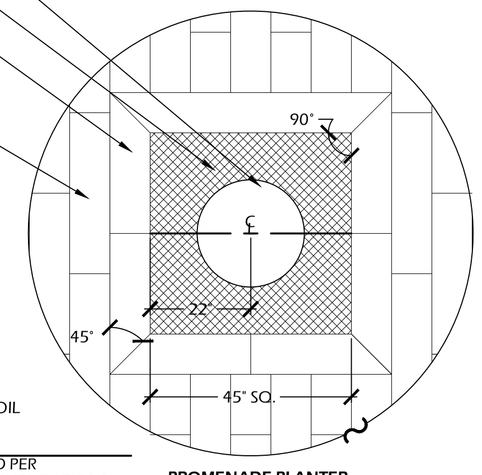

PROMENADE PLANTER PLAN VIEW NTS

6 / L600 CONTROL JOINT
SCALE: 3" - 1'-0"

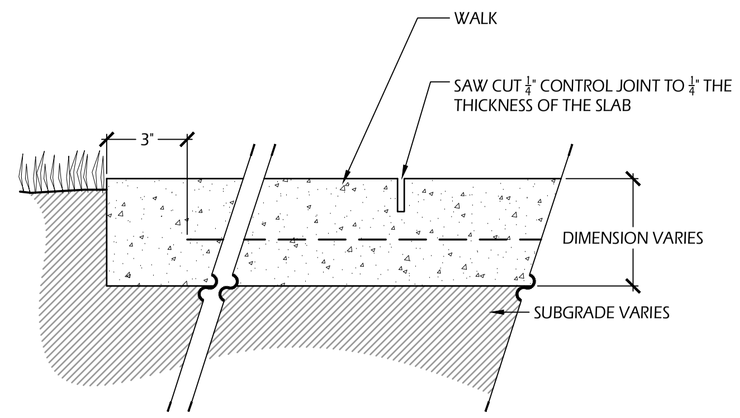

7 / L600 EXPANSION JOINT
SCALE: 3" - 1'-0"

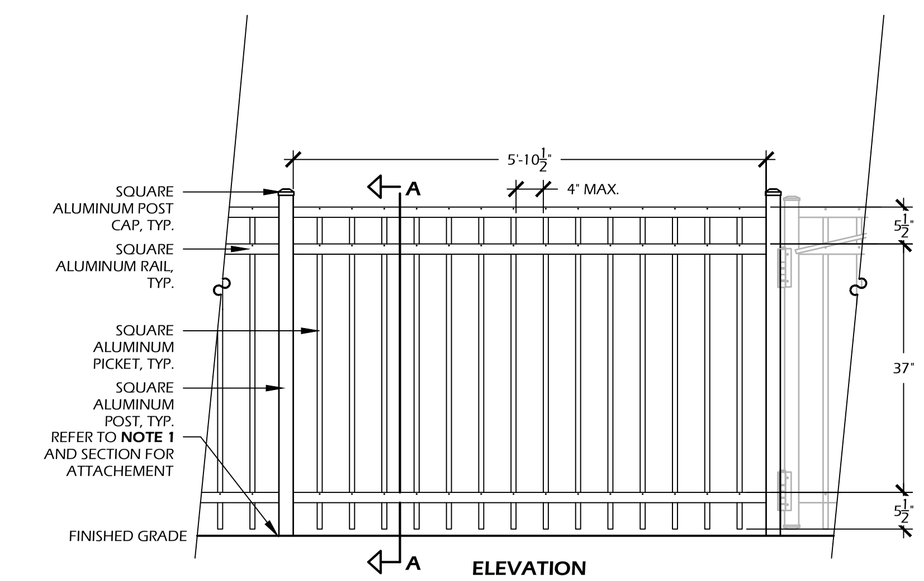

ELEVATION

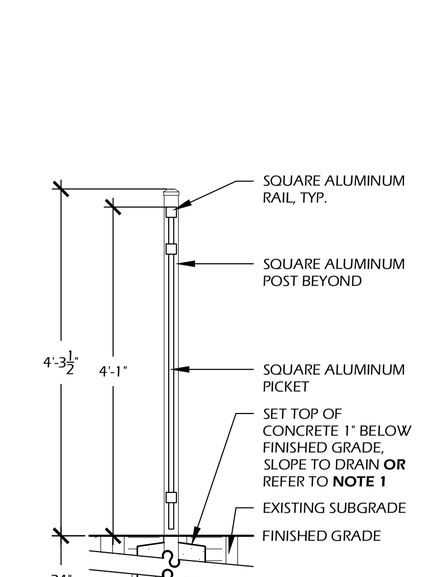

SECTION A

FENCE MANUFACTURER INFORMATION:

MANUFACTURER:
JERITH MANUFACTURING LLC
14400 MCNULTY RD,
PHILADELPHIA, PA, 19154
PHONE: (800) 344.2242
WEB: WWW.JERITH.COM

FENCE: JERITH AREO FENCE ELBA, 48" HEIGHT
MATERIAL: ALUMINUM
COLOR: POWDER COATED BLACK
STYLE: #202

OTHER INFORMATION:

CONCRETE: 3,000 P.S.I. AT 28 DAYS
SOIL COMPACTION: 95% STANDARD PROCTOR

NOTES:
1. IF FENCE POST(S) LAND ON CONCRETE WALK, POST(S) SHALL BE SURFACE MOUNTED PER MANUFACTURERS SPEC. REFER TO PLAN SHEETS **L100, L101, & L102** FOR LOCATIONS.
2. INSTALLATION TO BE COMPLETED PER MANUFACTURERS SPECIFICATIONS.
3. CONTRACTOR TO VERIFY ALL DIMENSIONS PRIOR TO CONSTRUCTION. REPORT ANY DISCREPANCIES TO OWNER, OWNER'S REPRESENTATIVE OR LANDSCAPE ARCHITECT.

8 / L600 PLAYGROUND FENCE
SCALE: 3/4" - 1'-0"

Wimer, Jones, Keefer Ltd.
landscape architecture
land planning
www.wjkld.com
23 Promenade Street, Suite 201 | Bluffton, South Carolina | 29910 | ph 843.757.7411

© 2024 WJK LTD.
DESIGN CONCEPTS, DRAWING, SHEETS, LOGOS, SPECIFICATIONS, DETAILS, WRITTEN MATERIAL SHALL NOT BE USED OR REPRODUCED IN WHOLE OR IN PART IN ANY FORM WITHOUT PRIOR WRITTEN CONSENT OF WJK LTD.

THIS SHEET TO SCALE AT: 24"X36"

SITE DEVELOPMENT PLANS
FOR

SHELTER COVE - PHASE 2

39 SHELTER COVE LANE
TOWN OF HILTON HEAD ISLAND, SOUTH CAROLINA

DATE:	NOV 11, 2025
PROJECT NO.:	22062.15
DRAWN BY:	CK, ED
CHECKED BY:	BW

DRB SUBMITTAL SET, NOT FOR CONSTRUCTION

REVISIONS:

DRAWING TITLE
SITE DETAILS - 01

DRAWING NUMBER
L600

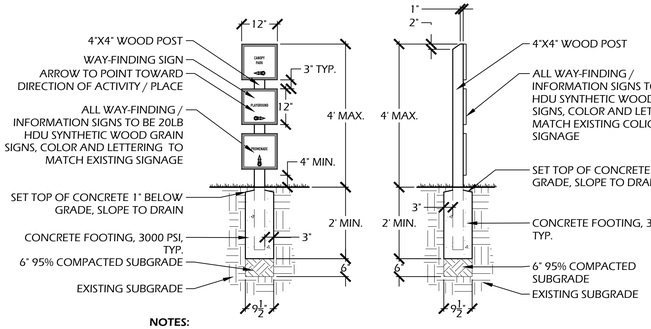

NOTES:

1. CONTRACTOR IS RESPONSIBLE FOR ALL SIGNAGE APPLICATIONS & PERMITTING PROCESS. ANY DISCREPANCY IN DESIGN MUST BE REPORTED TO LANDSCAPE ARCHITECT AND OWNER OR OWNER'S REPRESENTATIVE.
2. 1 - 3 SIGNS PER POST, 3 SIGNS MAX.
3. ALL LUMBER SHALL BE #1 PRESSURE TREATED SOUTHERN YELLOW PINE WITH NATURAL FINISH AND WATER SEALANT.
4. ALL ATTACHMENTS SHALL BE WITH STAINLESS STEEL SCREWS SUITABLE FOR PRESSURE TREATED WOOD, NO NAILS SHALL BE USED.



1. POSSIBLE SIGNS, SIGN LOGOS, LETTERING AND COLOR TO MATCH EXISTING TOWN OF HILTON HEAD ISLAND PARK SIGNS OTHER SIGNS MAY OR MAY NOT BE INCLUDED DEPENDING ON USE, FINAL SIGNS AND LOCATIONS TO BE APPROVED BY LANDSCAPE ARCHITECT AND OWNER OR OWNER'S REPRESENTATIVE

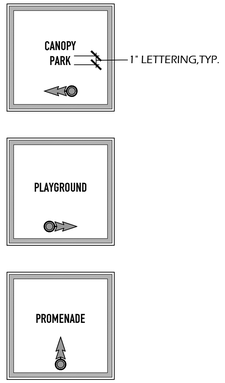

ENLARGEMENT
N.T.S.

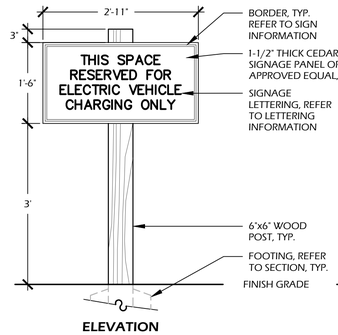

ELEVATION

NOTES:

1. GENERAL CONTRACTOR IS RESPONSIBLE FOR ALL SIGNAGE APPLICATIONS AND PERMITTING PROCESS. ANY DISCREPANCY IN DESIGN MUST BE REPORTED TO LANDSCAPE ARCHITECT AND OWNER OR OWNER'S REPRESENTATIVE.
2. SIGN FABRICATOR SHALL PROVIDE SAMPLES OF PAINT COLORS AND FONT FOR APPROVAL BY LANDSCAPE ARCHITECT AND OWNER'S REPRESENTATIVE PRIOR TO CONSTRUCTION.
3. SIGN FABRICATOR SHALL PROVIDE MOCKUP OF SIGN PANEL WITH APPROVED COLOR(S) AND FONT(S) FOR FINAL APPROVAL BY LANDSCAPE ARCHITECT AND OWNER'S REPRESENTATIVE PRIOR TO CONSTRUCTION.
4. ALL ATTACHMENTS SHALL BE STAINLESS STEEL SUITABLE FOR PRESSURE TREATED WOOD, NO NAILS SHALL BE USED.

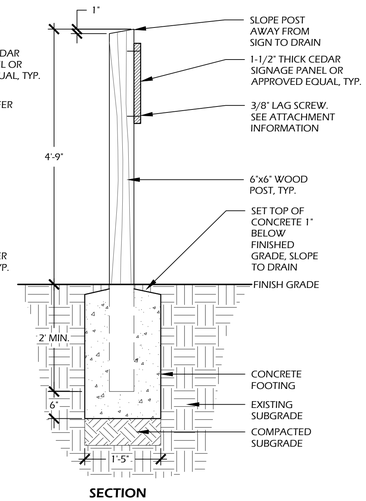

SECTION

SIGN INFORMATION:

WOOD: NO. 1 SOUTHERN YELLOW PINE
PANEL COLOR: DARK BLUE (HEX#282763 OR APPROVED EQUAL)
POST COLOR: STAINED CHARLESTON GREEN (TYPICAL ALL POSTS) (HEX#232B2B OR APPROVED EQUAL)

LETTERING INFORMATION:

FONT: 2" BASKERVILLE
FONT COLOR: STAINED WHITE

ATTACHMENT INFORMATION:

ATTACH SIGN PANEL TO WOOD POST(S) WITH 3/8" LAG SCREW AT ALL 4 CORNERS. COUNTERSINK AND PAINT TO MATCH SIGN PANEL.

OTHER INFORMATION:

CONCRETE: 3,000 P.S.I. @ 28 DAYS
SOIL COMPACTION: 95% STANDARD PROCTOR

SIGNAGE MANUFACTURER INFO:

W. M. ENTERPRISES SIGN DIVISION
112 E ADAMS ST.
RIDGELAND, SOUTH CAROLINA
PHONE: (843) 258.5519

1 // L601 WAYFINDING INFORMATION SIGN

SCALE: 1/2"-1'-0"

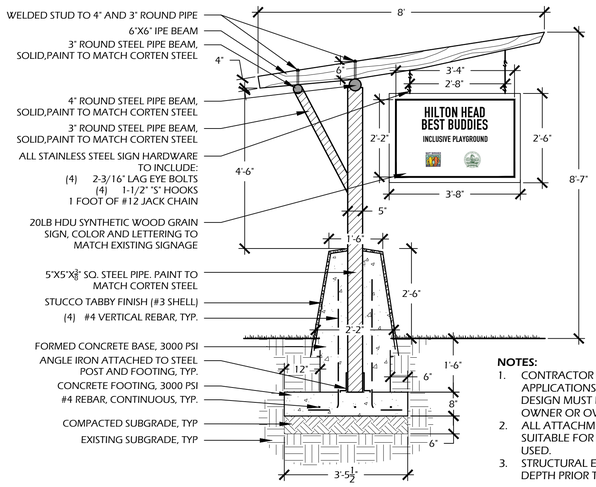

SECTION

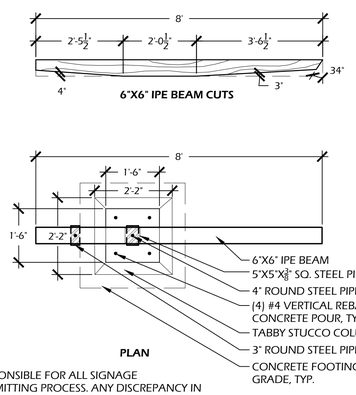

PLAN

NOTES:

1. CONTRACTOR IS RESPONSIBLE FOR ALL SIGNAGE APPLICATIONS & PERMITTING PROCESS. ANY DISCREPANCY IN DESIGN MUST BE REPORTED TO LANDSCAPE ARCHITECT AND OWNER OR OWNER'S REPRESENTATIVE.
2. ALL ATTACHMENTS SHALL BE WITH STAINLESS STEEL SCREWS SUITABLE FOR PRESSURE TREATED WOOD, NO NAILS SHALL BE USED.
3. STRUCTURAL ENGINEER TO CONFIRM FOOTING THICKNESS & DEPTH PRIOR TO CONSTRUCTION.

2 // L601 EV CHARGING SIGN

SCALE: 3/4"-1'-0"

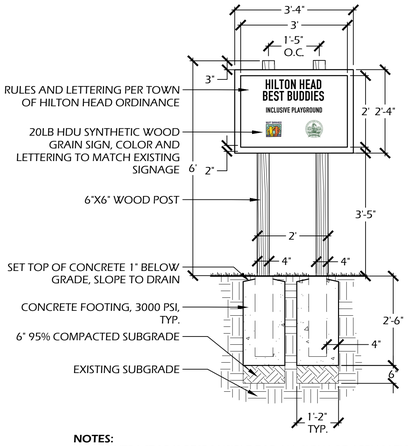

NOTES:

1. CONTRACTOR IS RESPONSIBLE FOR ALL SIGNAGE APPLICATIONS & PERMITTING PROCESS. ANY DISCREPANCY IN DESIGN MUST BE REPORTED TO LANDSCAPE ARCHITECT AND OWNER OR OWNER'S REPRESENTATIVE.
2. ALL LUMBER SHALL BE #1 PRESSURE TREATED SOUTHERN YELLOW PINE WITH NATURAL FINISH, AND WATER SEALANT.
3. ALL ATTACHMENTS SHALL BE WITH STAINLESS STEEL SCREWS SUITABLE FOR PRESSURE TREATED WOOD, NO NAILS SHALL BE USED

3 // L601 PRIMARY PLAYGROUND SIGN

SCALE: 1/2" - 1'-0"

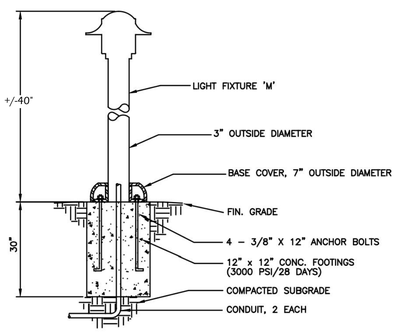

MANUFACTURER INFORMATION:

LUMEC BY SIGNIFY

PHONE: (587) 391.1269
WEB: WWW.LSWLIGHTING.CA

MODEL: DOMUS BOLLARD SMALL (DOSB1)
COLOR: BLACK TEXTURED (BKTX)
LAMP: 30W16LED4K
VOLTAGE: 208V
OPTIONS: VANDALPROOF HARDWARE (VPA)

OR APPROVED EQUAL

4 // L601 SECONDARY PLAYGROUND SIGN

SCALE: N.T.S.



MANUFACTURER INFORMATION:

NITELITES
6107 MARKET AVE.
FRANKLIN, OH 45005
PHONE: (513) 424.5510
WEB: WWW.NITELITES.COM

MODEL: NITE-025DL DOWN LIGHT
FINISH: AGED BRASS
BULB: NITE-429BR7W MR16 LED
WATTAGE: 7 WATTS
TEMPERATURE: 2700K
MOUNTING: TREE MOUNT

OR APPROVED EQUAL



MANUFACTURER INFORMATION:

NITELITES
6107 MARKET AVE.
FRANKLIN, OH 45005
PHONE: (513) 424.5510
WEB: WWW.NITELITES.COM

MODEL: NITE-004 BULLET
FINISH: AGED BRASS
BULB: NITE-429BR5W MR16 LED
WATTAGE: 5 WATTS
TEMPERATURE: 2700K
MOUNTING: STAKE

OR APPROVED EQUAL

6 // L601 BOLLARD LIGHT

SCALE: N.T.S.

7 // L601 DOWN LIGHT

SCALE: N.T.S.

8 // L601 UP LIGHT

SCALE: N.T.S.

Wimer, Jones, Keefer Ltd.
landscape architecture
land planning
www.wjkltd.com
23 Promenade Street, Suite 201 | Bluffton, South Carolina | 29910 | ph 843.757.7411

© 2024 WJK LTD.
DESIGN CONCEPTS, DRAWING, SHEETS, LOGOS, SPECIFICATIONS, DETAILS, WRITTEN MATERIAL SHALL NOT BE USED OR REPRODUCED IN WHOLE OR IN PART IN ANY FORM WITHOUT PRIOR WRITTEN CONSENT OF WJK LTD.

THIS SHEET TO SCALE AT: 24"X36"

SITE DEVELOPMENT PLANS
FOR
SHELTER COVE - PHASE 2
39 SHELTER COVE LANE
TOWN OF HILTON HEAD ISLAND, SOUTH CAROLINA

DATE:	NOV 11, 2025
PROJECT NO.:	22062.15
DRAWN BY:	CK, ED
CHECKED BY:	BW

DRB SUBMITTAL SET, NOT FOR CONSTRUCTION

REVISIONS:

DRAWING TITLE
SITE DETAILS - 02

DRAWING NUMBER
L601

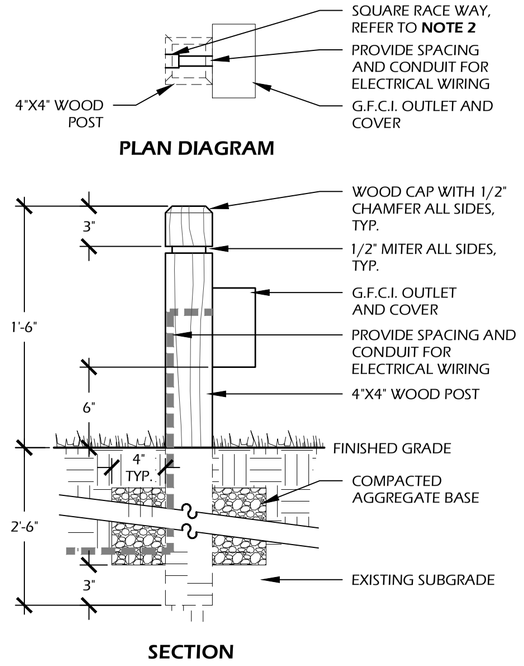

G.F.C.I. INFORMATION:
MODEL: BY OWNER, G.F.C.I. OUTLET MODEL SHALL COMPLY WITH ALL FEDERAL, STATE AND LOCAL CODES FOR OUTDOOR USE AND WEATHER RESISTANCE.

WOOD INFORMATION:
WOOD: NO.1 PRESSURE TREATED SOUTHERN YELLOW PINE
COLOR: STAINED CHARLESTON GREEN

NOTES:
1. G.F.C.I. MANUFACTURER TO PROVIDE SPECIFICATIONS FOR CONTRACTOR REFERENCE.
2. CONTRACTOR SHALL PROVIDE SQUARE RACEWAY ON BACK OF POST FOR CONDUIT AND ELECTRICAL WIRING. FILL RACEWAY WITH SQUARE DOWEL. FILL ALL IMPERFECTIONS WITH APPROPRIATE WOOD PUTTY, AND SAND SMOOTH PRIOR TO STAIN.
3. ELECTRICAL CONDUIT SHALL BE BURIED TO PROPER DEPTH PER ALL FEDERAL, STATE, AND LOCAL CODES.
4. ALL ATTACHMENTS SHALL BE WITH STAINLESS STEEL SCREWS SUITABLE FOR PRESSURE TREATED WOOD, NO NAILS SHALL BE USED.
5. CONTRACTOR SHALL PROVIDE COLOR SAMPLES TO BE APPROVED BY OWNER AND LANDSCAPE ARCHITECT PRIOR TO CONSTRUCTION

1 // L602 G.F.I. OUTLET
SCALE: 1-1/2" - 1'-0"



MANUFACTURER INFORMATION:
AUTEL ENERGY
36 HARBOR PARK DRIVE,
PORT WASHINGTON, NY 11050
PHONE: (844) 765-0150
WEB: WWW.AUTELENERGY.COM

MODEL: MAXI US AC 12KW
FINISH: DARK GREY
OTHER INFO: IN-BODY HOLSTER

MOUNT: AUTEL EV CHARGER PEDESTAL FLOOR STAND
MOUNT COLOR: BLACK

OR APPROVED EQUAL

2 // L602 E.V. CHARGING STATION
SCALE: N.T.S.

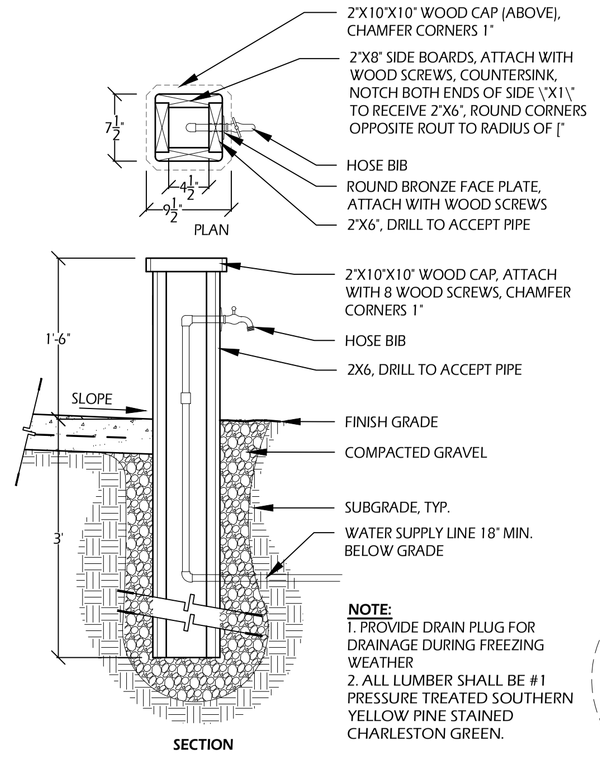

NOTE:
1. PROVIDE DRAIN PLUG FOR DRAINAGE DURING FREEZING WEATHER
2. ALL LUMBER SHALL BE #1 PRESSURE TREATED SOUTHERN YELLOW PINE STAINED CHARLESTON GREEN.

3 // L602 HOSE BIB
SCALE: 1" - 1'-0"

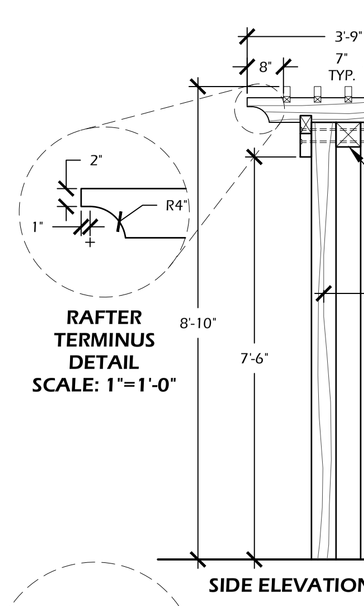

NOTES:
1. ALL LUMBER SHALL BE PRESSURE TREATED #1 SOUTHERN YELLOW PINE.
2. ALL CUTS SHALL BE EVEN AND JOINTS FLUSH, SAND FOUR SIDES AND FILL IMPERFECTIONS, COUNTER SINKS AND SCREW HOLES TO ASSURE EVEN FINISH.
3. ALL NOTCHES SHALL BE SHOP CUT TO ASSURE TIGHT JOINTS. EACH MEMBER SHALL BE DRIVEN HOME TO ASSURE TIGHT FIT. PILOT HOLES SHALL BE DRILLED FOR EACH CARRIAGE BOLT. PLUG AND SEAL.
4. CONTRACTOR SHALL VERIFY ALL WOOD MEMBERS FOR APPROPRIATE SIZE, SPACING, ATTACHMENTS AND STRUCTURAL STABILITY PRIOR TO CONSTRUCTION, REPORT ANY DISCREPANCIES TO OWNER AND / OR LANDSCAPE ARCHITECT.
5. CONTRACTOR TO VERIFY ALL DIMENSIONS IN FIELD AGAINST EXISTING TRELLIS SWING ON SITE. NEW SWINGS TO MATCH OLD SWING AS CLOSELY AS POSSIBLE.
6. FINISH ALL SIDES AND CAULK ALL JOINTS WITH APPROPRIATE EXTERIOR CAULK PRIOR TO FINISHING.
7. ALL ATTACHMENTS SHALL BE WITH STAINLESS STEEL SCREWS SUITABLE FOR PRESSURE TREATED WOOD. NO NAILS SHALL BE USED.

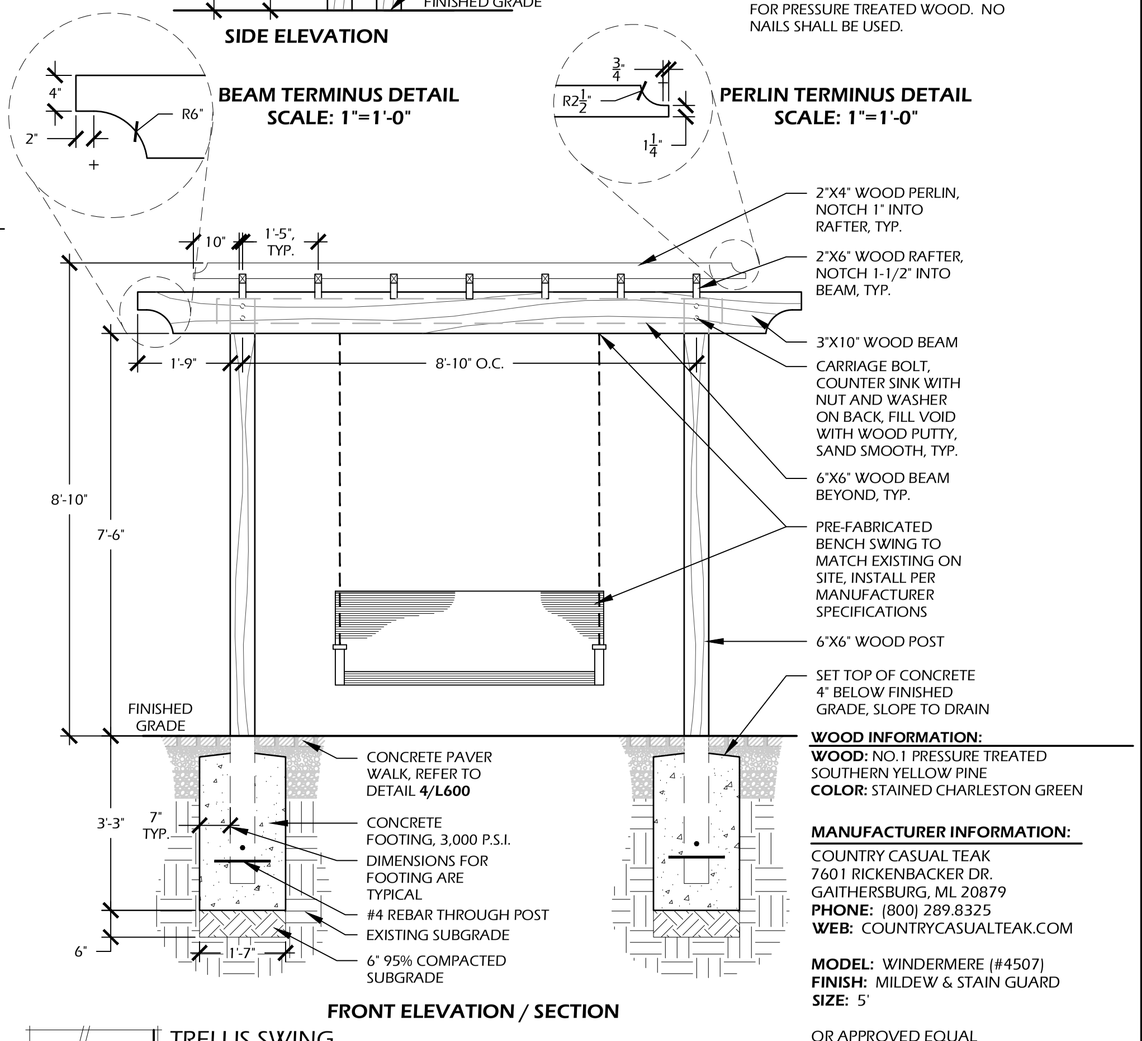

WOOD INFORMATION:
WOOD: NO.1 PRESSURE TREATED SOUTHERN YELLOW PINE
COLOR: STAINED CHARLESTON GREEN

MANUFACTURER INFORMATION:
COUNTRY CASUAL TEAK
7601 RICKENBACKER DR.
GAITHERSBURG, ML 20879
PHONE: (800) 289.8325
WEB: COUNTRYCASUALTEAK.COM

MODEL: WINDERMERE (#4507)
FINISH: MILDEW & STAIN GUARD
SIZE: 5'

OR APPROVED EQUAL

5 // L602 TRELLIS SWING
SCALE: 1/2" - 1'-0"



MANUFACTURER INFORMATION:
LANDSCAPEFORMS
431 LAWNDALE AVE.
KALAMAZOO, MI. 49048
PHONE: (800) 430.6209
WEB: WWW.LANDSCAPEFORMS.COM

MODEL: PLAINWELL LITTER RECEPTACLE
ACCESSORIES: SIDE OPENING LID
METAL FINISH: POWDER COATED COLOR STORMCLOUD
WOOD FINISH: EXTERIOR WOOD JARRAH
MOUNT: SURFACE MOUNT

Drawing: PL277-03
Date: 5/6/2010
Dimensions are in Inches
U.S. Patent No.: D422,390

CONFIDENTIAL DRAWING INFORMATION CONTAINED HEREIN IS THE PROPERTY OF LANDSCAPE FORMS, INC. INTENDED USE IS LIMITED TO DESIGN PROFESSIONALS SPECIFYING LANDSCAPE FORMS, INC. PRODUCTS AND THEIR DIRECT CLIENTS. DRAWING IS NOT TO BE COPIED OR DISCLOSED TO OTHERS WITHOUT THE CONSENT OF LANDSCAPE FORMS, INC. © 2010 LANDSCAPE FORMS, INC. ALL RIGHTS RESERVED.

TRASH RECEPTACLES ON WALKS:
SURFACE MOUNT TO CONCRETE WALKS PER MANUFACTURERS RECOMMENDATIONS. CORROSION-RESISTANT ANCHORING HARDWARE SUPPLIED BY OTHERS. Ø .406" HOLES WITH COUNTERBORE PROVIDED FOR SOCKET HEAD CAP SCREWS

NOTES:
1. CONTRACTOR TO PROVIDE ANCHORING AND ATTACH TRASH RECEPTACLE TO WALKS AND CONCRETE ROUND FOOTINGS PER MANUFACTURERS SPEC.
2. ANCHORING TO BE LOCKABLE TO PREVENT TAMPERING AND/OR REMOVAL OF TRASH RECEPTACLE

TRASH RECEPTACLES IN LAWN MULCHED AREAS:

4 // L602 TRASH RECEPTACLE
SCALE: 3/4" - 1'-0"

EXAMPLE CURVED BENCH IMAGE

6 // L602 CURVED BENCH **DETAIL IN PROGRESS**
SCALE: 1" - 1'-0"

MANUFACTURER INFORMATION:
DOG WASTE DEPOT
PHONE: (000) 000.0000
WEB: WWW.DOGWASTEDEPOT.COM

SIGN: DEPOT-008-GRN
CAN: DEPOT-030-GRN
DISPENSER: DEPOT-003-GRN
COLOR: GREEN

OR APPROVED EQUAL

MATERIAL SPECIFICATION:
WOOD: NO. 1 PRESSURE TREATED SOUTHERN YELLOW PINE
WOOD COLOR: STAINED CHARLESTON GREEN (HEX#232B2B OR APPROVED EQUAL)

CONCRETE: 3,000 P.S.I. @ 28 DAYS

COMPACTED SUBGRADE: 95% STANDARD PROCTOR

7 // L602 DOG WASTE STATION
SCALE: 3/4" - 1'-0"

MANUFACTURER INFORMATION:
LANDSCAPE FORMS INC.
7800 E. MICHIGAN AVE.
KALAMAZOO, MI 49048
PHONE: (269) 381.0396
WEB: WWW.LANDSCAPEFORMS.COM

MODEL: SCARBOROUGH BENCH
COLOR: OBSIDIAN POWDERCOAT
SIZE: 72"
BENCH STYLE: BACKLESS
BENCH INSERT: HORIZONTAL STRAP

OR APPROVED EQUAL

8 // L602 BACKLESS BENCH
SCALE: 3/4"-1'-0"

Miller Jones Reefer Ltd.
landscape architecture
land planning
www.wjkltd.com
23 Promenade Street, Suite 201 | Bluffton, South Carolina | 29910 | ph 843.757.7411

© 2024 WJK LTD.
DESIGN CONCEPTS, DRAWING, SHEETS, LOGOS, SPECIFICATIONS, DETAILS, WRITTEN MATERIAL SHALL NOT BE USED OR REPRODUCED IN WHOLE OR IN PART IN ANY FORM WITHOUT PRIOR WRITTEN CONSENT OF WJK LTD.

THIS SHEET TO SCALE AT: 24"X36"

SITE DEVELOPMENT PLANS
FOR
SHELTER COVE - PHASE 2
39 SHELTER COVE LANE
TOWN OF HILTON HEAD ISLAND, SOUTH CAROLINA

DATE:	NOV 11, 2025
PROJECT NO.:	22062.15
DRAWN BY:	CK, ED
CHECKED BY:	BW

DRB SUBMITTAL SET, NOT FOR CONSTRUCTION

REVISIONS:

DRAWING TITLE
SITE DETAILS - 03

DRAWING NUMBER
L602

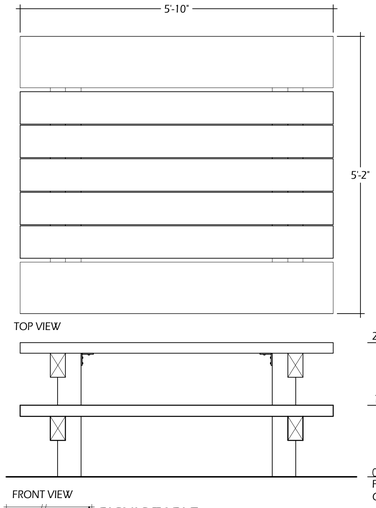

MANUFACTURER INFORMATION:
COLUMBIA CASCADE COMPANY
1300 S.W. SIXTH AVENUE, SUITE 310
PORTLAND, OR. 97201-3464
PHONE: (503) 233.1157
WEB: WWW.TIMBERFORM.COM

MODEL: TIMBERFORM ARBOR TABLE, NO. 2244-6, 6' PICNIC TABLE WITH SEATS
FINISH: KILN-DRIED DOUGLAS FIR
MOUNT: FREESTANDING

NOTES:
FOLLOW MANUFACTURER'S GUIDELINES FOR FINISH, TREATMENT AND MAINTENANCE OF WOOD

This drawing reveals the copyrighted intellectual property of Columbia Cascade Company. Not for use by others without our express, written authorization.

Authorization for use is hereby granted to architects, landscape architects and similar design professionals solely for the purpose of specifying TimberForm products.

1 // L603 PICNIC TABLE
SCALE: 3/4" - 1'-0"

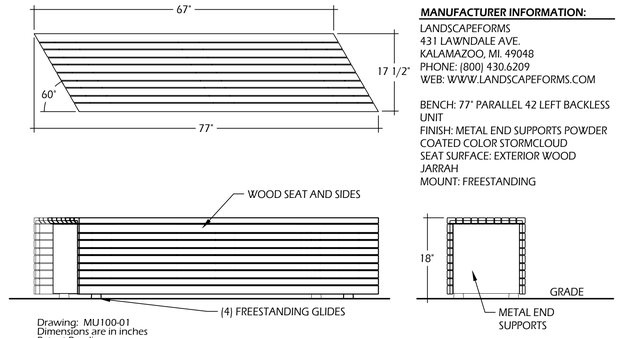

MANUFACTURER INFORMATION:
LANDSCAPEFORMS
431 LAWNDALE AVE.
KALAMAZOO, MI. 49048
PHONE: (800) 430.6209
WEB: WWW.LANDSCAPEFORMS.COM

BENCH: 77" PARALLEL 42 LEFT BACKLESS UNIT
FINISH: METAL END SUPPORTS POWDER COATED COLOR STORMCLOUD
SEAT SURFACE: EXTERIOR WOOD JARRAH
MOUNT: FREESTANDING

Drawing: MU100-01
Dimensions are in inches
Patent Pending

CONFIDENTIAL DRAWING INFORMATION CONTAINED HEREIN IS THE PROPERTY OF LANDSCAPE FORMS, INC. INTENDED USE IS LIMITED TO DESIGN PROFESSIONALS SPECIFYING LANDSCAPE FORMS, INC. PRODUCTS AND THEIR DIRECT CLIENTS. DRAWING IS NOT TO BE COPIED OR DISCLOSED TO OTHERS WITHOUT THE CONSENT OF LANDSCAPE FORMS, INC. © 2013 LANDSCAPE FORMS, INC. ALL RIGHTS RESERVED.

2 // L603 LEFT BENCH
SCALE: N.T.S.

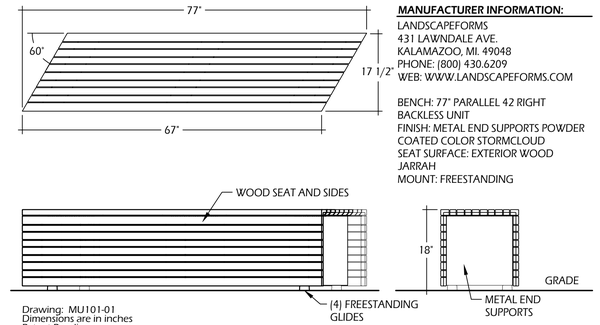

MANUFACTURER INFORMATION:
LANDSCAPEFORMS
431 LAWNDALE AVE.
KALAMAZOO, MI. 49048
PHONE: (800) 430.6209
WEB: WWW.LANDSCAPEFORMS.COM

BENCH: 77" PARALLEL 42 RIGHT BACKLESS UNIT
FINISH: METAL END SUPPORTS POWDER COATED COLOR STORMCLOUD
SEAT SURFACE: EXTERIOR WOOD JARRAH
MOUNT: FREESTANDING

Drawing: MU101-01
Dimensions are in inches
Patent Pending

CONFIDENTIAL DRAWING INFORMATION CONTAINED HEREIN IS THE PROPERTY OF LANDSCAPE FORMS, INC. INTENDED USE IS LIMITED TO DESIGN PROFESSIONALS SPECIFYING LANDSCAPE FORMS, INC. PRODUCTS AND THEIR DIRECT CLIENTS. DRAWING IS NOT TO BE COPIED OR DISCLOSED TO OTHERS WITHOUT THE CONSENT OF LANDSCAPE FORMS, INC. © 2013 LANDSCAPE FORMS, INC. ALL RIGHTS RESERVED.

3 // L603 RIGHT BENCH
SCALE: N.T.S.

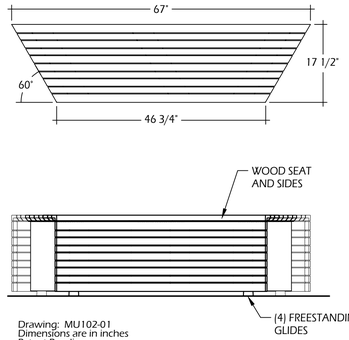

MANUFACTURER INFORMATION:
LANDSCAPEFORMS
431 LAWNDALE AVE.
KALAMAZOO, MI. 49048
PHONE: (800) 430.6209
WEB: WWW.LANDSCAPEFORMS.COM

BENCH: 67" PARALLEL 42 BACKLESS WEDGE UNIT
FINISH: METAL END SUPPORT POWDER COATED COLOR STORMCLOUD
SEAT SURFACE: EXTERIOR WOOD JARRAH
MOUNT: FREESTANDING

Drawing: MU102-01
Dimensions are in inches
Patent Pending

CONFIDENTIAL DRAWING INFORMATION CONTAINED HEREIN IS THE PROPERTY OF LANDSCAPE FORMS, INC. INTENDED USE IS LIMITED TO DESIGN PROFESSIONALS SPECIFYING LANDSCAPE FORMS, INC. PRODUCTS AND THEIR DIRECT CLIENTS. DRAWING IS NOT TO BE COPIED OR DISCLOSED TO OTHERS WITHOUT THE CONSENT OF LANDSCAPE FORMS, INC. © 2013 LANDSCAPE FORMS, INC. ALL RIGHTS RESERVED.

4 // L603 WEDGE BENCH
SCALE: N.T.S.

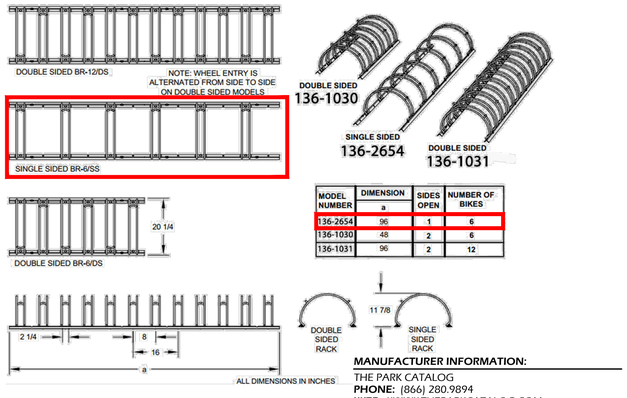

MODEL NUMBER	DIMENSION a	SIDES OPEN	NUMBER OF BIKES
136-2654	96	1	6
136-1030	48	2	6
136-1031	96	2	12

MANUFACTURER INFORMATION:
THE PARK CATALOG
PHONE: (866) 280.9894
WEB: WWW.THEPARKCATALOG.COM

MODEL: 6-BIKE SINGLE SIDED BIKE RACK (#136-2654)
COLOR: HOT-DIP GALVANIZED STEEL
OTHER INFO: SURFACE MOUNT TO CONCRETE BASE.
QUANTITY: 2

OR APPROVED EQUAL

5 // L603 BIKE RACK
SCALE: N.T.S.

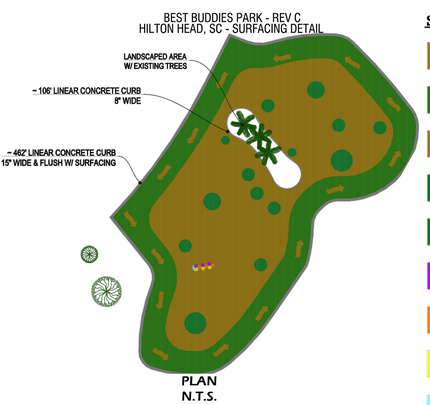

PLAN
N.T.S.

SURFACING NOTES:

- **6,325 SQ.FT. (BASE)** **TAN/BLACK** **VARYING CFH**
- **4,050 SQ.FT. (PATH)** **33/33/33 LIGHT GREEN/PATINA GREEN/BLACK** **VARYING CFH**
- **270 SQ.FT. (ARROWS)** **33/33/33 TAN/LIGHT GREY/TERRA COTTA RED** **VARYING CFH**
- **70 SQ.FT. (HILL/MOUND)** **33/33/33 TAN/LIGHT GREY/TERRA COTTA RED** **5" CFH**
- **550 SQ.FT. (CIRCLES)** **LIGHT GREEN/BLACK** **VARYING CFH**
- **14 SQ.FT. (HOP SCOTCH)** **PURPLE** **VARYING CFH**
- **14 SQ.FT. (HOP SCOTCH)** **ORANGE** **VARYING CFH**
- **14 SQ.FT. (HOP SCOTCH)** **YELLOW** **VARYING CFH**
- **6 SQ.FT. (HOP SCOTCH)** **TEAL** **VARYING CFH**

Standard Color Blends

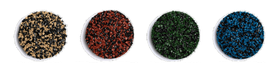

Available Colors



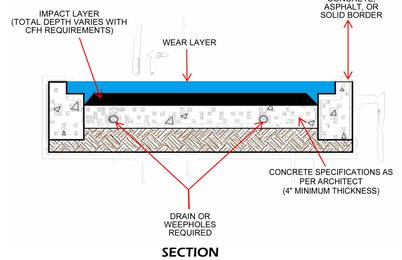

SECTION
N.T.S.

6 // L603 PLAY SURFACE
SCALE: N.T.S.

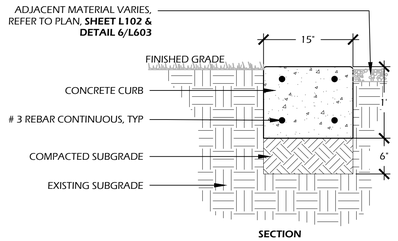

SECTION

CONCRETE INFORMATION:
CONCRETE: 3,000 P.S.I. AT 28 DAYS
FINISH: SMOOTH FINISH

SOIL INFORMATION:
SOIL COMPACTION: 95% STANDARD PROCTOR

NOTES:
1. CONTRACTOR SHALL PROVIDE A 2' LENGTH SAMPLE FOR APPROVAL BY OWNER AND LANDSCAPE ARCHITECT.
2. EXPANSION JOINTS TO BE PROVIDED ADJACENT TO ALL PROPOSED AND EXISTING CONCRETE.

7 // L603 FLUSH CONCRETE CURB A
SCALE: 1"-1'-0"

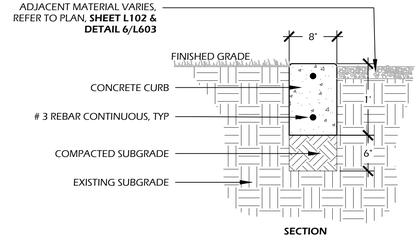

SECTION

CONCRETE INFORMATION:
CONCRETE: 3,000 P.S.I. AT 28 DAYS
FINISH: SMOOTH FINISH

SOIL INFORMATION:
SOIL COMPACTION: 95% STANDARD PROCTOR

NOTES:
1. CONTRACTOR SHALL PROVIDE A 2' LENGTH SAMPLE FOR APPROVAL BY OWNER AND LANDSCAPE ARCHITECT.
2. EXPANSION JOINTS TO BE PROVIDED ADJACENT TO ALL PROPOSED AND EXISTING CONCRETE.

8 // L603 FLUSH CONCRETE CURB B
SCALE: 1"-1'-0"

PercussionPlay®
Outdoor Musical Instruments

Stepping Stone



Description

Jump on these musical stepping stones to make a chord of chimes – irresistable, energetic fun!

Materials and Features

Stainless steel housing and sub frame.
Stainless steel fixings and internal mechanism.
Aluminum stopping plate.
Aluminum internal chimes.

Tuning and Sound Level Data

C-Major (C,E,G)
F-Major (F,A,C)
G-Major (G,B,D)

D-Minor (D,F,A)
E-Minor (E,G,B)
A-Minor (A,C,E)

165ft - 46dB
33ft - 53dB
10ft - 69dB

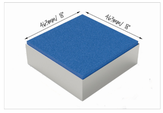

Packed Dimensions	Weight (lbs)	L (in)	H (in)	W (in)
Stepping Stone Box	62	21	21	8

Find more information and watch the video here.

Standard Compliance BS EN 1176
Warranty: Limited Twenty-Five (25), Limited Ten (10) Year & Limited Two (2) Year warranty
STEP/Issue 001

MANUFACTURER INFORMATION:
PERCUSSION PLAY

PHONE: (866) 882.9170
WEB: WWW.PERCUSSIONPLAY.COM

MODEL: STEPPING STONE SET OF 6
COLOR & QUANTITY:
(1) BLUE
(2) ORANGE
(1) YELLOW
(2) RED

OR APPROVED EQUAL

9 // L603 STEPPING STONE
SCALE: N.T.S.

Wimer, Jones, Keefer Ltd.
landscape architecture
land planning
www.wjkltd.com
23 Promenade Street, Suite 201 | Bluffton, South Carolina | 29910 | ph 843.757.7411

© 2024 WJK LTD.
DESIGN CONCEPTS, DRAWING, SHEETS, LOGOS, SPECIFICATIONS, DETAILS, WRITTEN MATERIAL SHALL NOT BE USED OR REPRODUCED IN WHOLE OR IN PART IN ANY FORM WITHOUT PRIOR WRITTEN CONSENT OF WJK LTD.

THIS SHEET TO SCALE AT: 24"X36"

SITE DEVELOPMENT PLANS
FOR

SHELTER COVE - PHASE 2

39 SHELTER COVE LANE
TOWN OF HILTON HEAD ISLAND, SOUTH CAROLINA

DATE:	NOV 11, 2025
PROJECT NO.:	22062.15
DRAWN BY:	CK, ED
CHECKED BY:	BW

DRB SUBMITTAL SET, NOT FOR CONSTRUCTION

REVISIONS:

DRAWING TITLE
SITE DETAILS - 04

DRAWING NUMBER
L603

Risk Management Sign



Note: English version shown.

MODEL	PRODUCT	GROUND SPACE	CONCRETE
787	Risk Management Sign - English	1'-6" x 3'-6"	0.09 cu. yd.
787FR	Risk Management Sign - French	1'-6" x 3'-6"	0.09 cu. yd.
787FRENG	Risk Management Sign - French/English	1'-6" x 3'-6"	0.09 cu. yd.
787SP	Risk Management Sign - Spanish	1'-6" x 3'-6"	0.09 cu. yd.
787BD	Risk Management Sign - English Surface MT	1'-6" x 3'-6"	site specific
787BDFR	Risk Management Sign - French Surface MT	1'-6" x 3'-6"	site specific
787BDFRENG	Risk Management Sign - French/English SM	1'-6" x 3'-6"	site specific
787BDSP	Risk Management Sign - Spanish Surface MT	1'-6" x 3'-6"	site specific

DESCRIPTION
The Risk Management Sign is intended to inform the parents and children that adult supervision is recommended, along with smart play on the equipment in the play area.

MATERIAL

Sign: Fiberglass embedded, gloss finish, 0.125" thick.

Steel Frame: 2-3/8" OD 12 gauge galvanized steel tubing, 13 gauge galvanized steel sheet for mounting sign, and 3/8" thick hot rolled steel base plate on each leg.

Extension Tube: 2.375 12GA GLV-IL X 24' tube round.

Hardware: Stainless steel that requires tooling to install or remove.

Finish: The frame shall have a Mira-Cote finish.

Page 1 of 1

787, 787FR, 787FRENG, 787SP, 787BD, 787BDFR, 787BDFRENG, 787BDSP — Risk Management Sign



MANUFACTURER INFORMATION:
MIRACLE RECREATION
878 E HIGHWAY 60
MONETT, MO 65708
PHONE: (866) 641.3138
WEB: WWW.MIRACLE-RECREATION.COM

MODEL: #787 RISK MANAGEMENT SIGN-ENGLISH
POST COLOR: DARK BROWN
QUANTITY: 1

OR APPROVED EQUAL

1 // L604 RISK MANAGEMENT SIGN
SCALE: N.T.S.

Welcome Sign - English, CSA, Spanish and SGL/DBL Sided Post

In-Ground and Surface Mount

Single Sided Post | **Double Sided Post**



MODEL	PRODUCT	GRND. SPC.	PROT. AREA	CONCRETE
787-001	MREC Welcome Sign 2-5YR	1'-6" x 2'-6"	N/A	0.10 cu. yds.
787-001BD	MREC Welcome Sign 2-5YR	1'-6" x 2'-6"	N/A	0.10 cu. yds.
787-002	MREC Welcome Sign 2-12YR	1'-6" x 2'-6"	N/A	0.10 cu. yds.
787-002BD	MREC Welcome Sign 2-12YR	1'-6" x 2'-6"	N/A	0.10 cu. yds.
787-003	MREC Welcome Sign 5-12YR	1'-6" x 2'-6"	N/A	0.10 cu. yds.
787-003BD	MREC Welcome Sign 5-12YR	1'-6" x 2'-6"	N/A	0.10 cu. yds.
787-011	MREC Welcome Sign French/Eng 18MO-5YR	1'-6" x 2'-6"	N/A	0.10 cu. yds.
787-011BD	MREC Welcome Sign French/Eng 18MO-5YR	1'-6" x 2'-6"	N/A	0.10 cu. yds.
787-012	MREC Welcome Sign French/Eng 18MO-12YR	1'-6" x 2'-6"	N/A	0.10 cu. yds.
787-012BD	MREC Welcome Sign French/Eng 18MO-12YR	1'-6" x 2'-6"	N/A	0.10 cu. yds.
787-013	MREC Welcome Sign French/Eng 5-12YR	1'-6" x 2'-6"	N/A	0.10 cu. yds.
787-013BD	MREC Welcome Sign French/Eng 5-12YR	1'-6" x 2'-6"	N/A	0.10 cu. yds.
787-021	MREC Welcome Sign Spanish 2-5YR	1'-6" x 2'-6"	N/A	0.10 cu. yds.
787-021BD	MREC Welcome Sign Spanish 2-5YR	1'-6" x 2'-6"	N/A	0.10 cu. yds.
787-022	MREC Welcome Sign Spanish 2-12YR	1'-6" x 2'-6"	N/A	0.10 cu. yds.
787-022BD	MREC Welcome Sign Spanish 2-12YR	1'-6" x 2'-6"	N/A	0.10 cu. yds.
787-023	MREC Welcome Sign Spanish 5-12YR	1'-6" x 2'-6"	N/A	0.10 cu. yds.
787-023BD	MREC Welcome Sign Spanish 5-12YR	1'-6" x 2'-6"	N/A	0.10 cu. yds.
787-091	MREC Custom Sign SGL Sided	1'-6" x 2'-6"	N/A	0.10 cu. yds.
787-091BD	MREC Custom Sign SGL Sided	1'-6" x 2'-6"	N/A	0.10 cu. yds.
787-092	MREC Custom Sign DBL Sided	1'-6" x 2'-6"	N/A	0.10 cu. yds.
787-092BD	MREC Custom Sign DBL Sided	1'-6" x 2'-6"	N/A	0.10 cu. yds.

Consult Miracle's "Glossary of Technical Data for Materials, Processes & Finishes" for specifications of underlined items.

787-001, 787-001BD, 787-002, 787-002BD, 787-003, 787-003BD, 787-011, 787-011BD, 787-012, 787-012BD, 787-013, 787-013BD, 787-021, 787-021BD, 787-022, 787-022BD, 787-023, 787-023BD, 787-091, 787-091BD, 787-092, 787-092BD — Welcome Sign

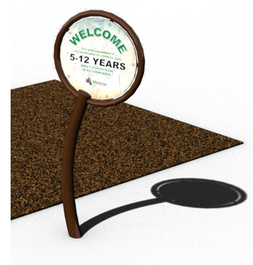

MANUFACTURER INFORMATION:
MIRACLE RECREATION
878 E HIGHWAY 60
MONETT, MO 65708
PHONE: (866) 641.3138
WEB: WWW.MIRACLE-RECREATION.COM

MODEL: #787-003 MREC WELCOME SIGN 5-12YR, SINGLE SIDED, ENGLISH
POST COLOR: DARK BROWN
QUANTITY: 1

OR APPROVED EQUAL

2 // L604 5-12 WELCOME SIGN
SCALE: N.T.S.

Welcome Sign - English, CSA, Spanish and SGL/DBL Sided Post

In-Ground and Surface Mount

Single Sided Post | **Double Sided Post**



MODEL	PRODUCT	GRND. SPC.	PROT. AREA	CONCRETE
787-001	MREC Welcome Sign 2-5YR	1'-6" x 2'-6"	N/A	0.10 cu. yds.
787-001BD	MREC Welcome Sign 2-5YR	1'-6" x 2'-6"	N/A	0.10 cu. yds.
787-002	MREC Welcome Sign 2-12YR	1'-6" x 2'-6"	N/A	0.10 cu. yds.
787-002BD	MREC Welcome Sign 2-12YR	1'-6" x 2'-6"	N/A	0.10 cu. yds.
787-003	MREC Welcome Sign 5-12YR	1'-6" x 2'-6"	N/A	0.10 cu. yds.
787-003BD	MREC Welcome Sign 5-12YR	1'-6" x 2'-6"	N/A	0.10 cu. yds.
787-011	MREC Welcome Sign French/Eng 18MO-5YR	1'-6" x 2'-6"	N/A	0.10 cu. yds.
787-011BD	MREC Welcome Sign French/Eng 18MO-5YR	1'-6" x 2'-6"	N/A	0.10 cu. yds.
787-012	MREC Welcome Sign French/Eng 18MO-12YR	1'-6" x 2'-6"	N/A	0.10 cu. yds.
787-012BD	MREC Welcome Sign French/Eng 18MO-12YR	1'-6" x 2'-6"	N/A	0.10 cu. yds.
787-013	MREC Welcome Sign French/Eng 5-12YR	1'-6" x 2'-6"	N/A	0.10 cu. yds.
787-013BD	MREC Welcome Sign French/Eng 5-12YR	1'-6" x 2'-6"	N/A	0.10 cu. yds.
787-021	MREC Welcome Sign Spanish 2-5YR	1'-6" x 2'-6"	N/A	0.10 cu. yds.
787-021BD	MREC Welcome Sign Spanish 2-5YR	1'-6" x 2'-6"	N/A	0.10 cu. yds.
787-022	MREC Welcome Sign Spanish 2-12YR	1'-6" x 2'-6"	N/A	0.10 cu. yds.
787-022BD	MREC Welcome Sign Spanish 2-12YR	1'-6" x 2'-6"	N/A	0.10 cu. yds.
787-023	MREC Welcome Sign Spanish 5-12YR	1'-6" x 2'-6"	N/A	0.10 cu. yds.
787-023BD	MREC Welcome Sign Spanish 5-12YR	1'-6" x 2'-6"	N/A	0.10 cu. yds.
787-091	MREC Custom Sign SGL Sided	1'-6" x 2'-6"	N/A	0.10 cu. yds.
787-091BD	MREC Custom Sign SGL Sided	1'-6" x 2'-6"	N/A	0.10 cu. yds.
787-092	MREC Custom Sign DBL Sided	1'-6" x 2'-6"	N/A	0.10 cu. yds.
787-092BD	MREC Custom Sign DBL Sided	1'-6" x 2'-6"	N/A	0.10 cu. yds.

Consult Miracle's "Glossary of Technical Data for Materials, Processes & Finishes" for specifications of underlined items.

787-001, 787-001BD, 787-002, 787-002BD, 787-003, 787-003BD, 787-011, 787-011BD, 787-012, 787-012BD, 787-013, 787-013BD, 787-021, 787-021BD, 787-022, 787-022BD, 787-023, 787-023BD, 787-091, 787-091BD, 787-092, 787-092BD — Welcome Sign



MANUFACTURER INFORMATION:
MIRACLE RECREATION
878 E HIGHWAY 60
MONETT, MO 65708
PHONE: (866) 641.3138
WEB: WWW.MIRACLE-RECREATION.COM

MODEL: #787-002 MREC WELCOME SIGN 2-12YR, SINGLE SIDED, ENGLISH
POST COLOR: DARK BROWN
QUANTITY: 1

OR APPROVED EQUAL

3 // L604 2-12 WELCOME SIGN
SCALE: N.T.S.

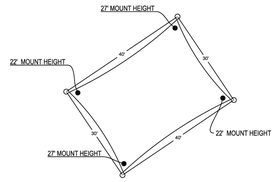

PLAN
N.T.S.

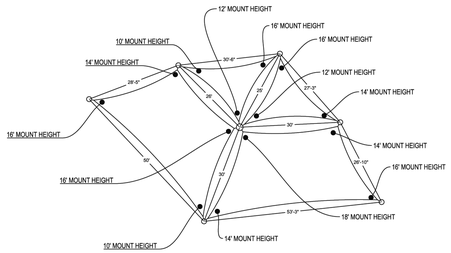

MANUFACTURER INFORMATION:
SHADE SYSTEMS
4150 S.W. 19 STREET
OCALA, FL. 34474
PHONE: (800) 609.6066
WEB: WWW.SHADESYSTEMSINC.COM

MODEL: CUSTOM SAIL SHADE SYSTEM STRUCTURE

OR APPROVED EQUAL

4 // L604 SHADE SAIL
SCALE: N.T.S.

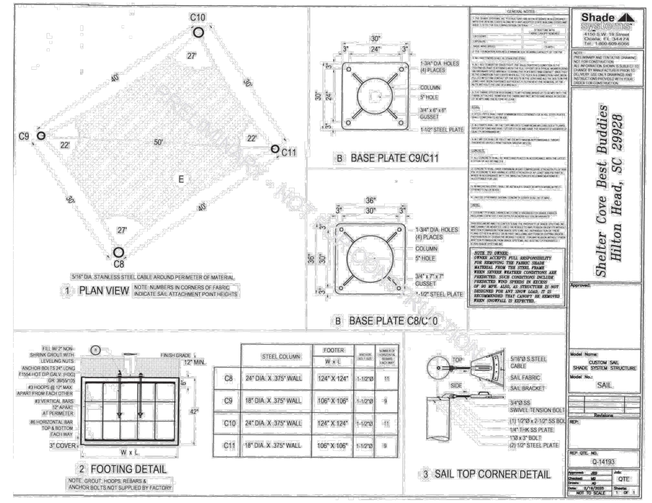

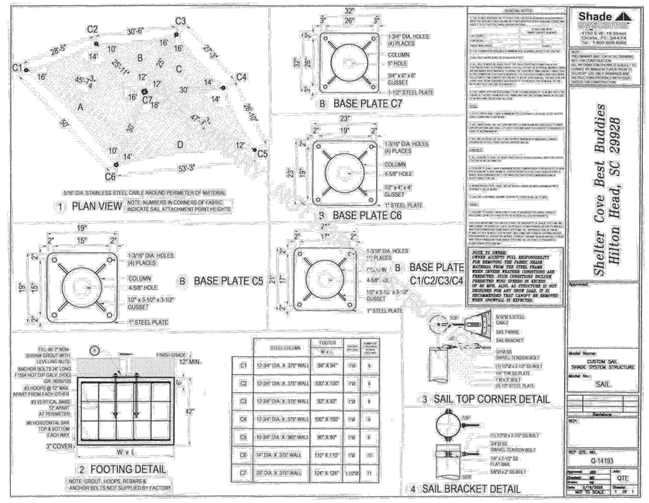

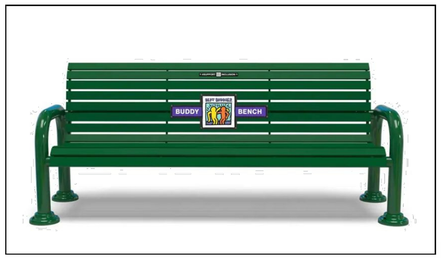

MANUFACTURER INFORMATION:
MIRACLE RECREATION
878 E HIGHWAY 60
MONETT, MO 65708
PHONE: (866) 641.3138
WEB: WWW.MIRACLE-RECREATION.COM

MODEL: MRBB400S
COLOR: BEST BUDDIES GREEN
QUANTITY: 6

OR APPROVED EQUAL

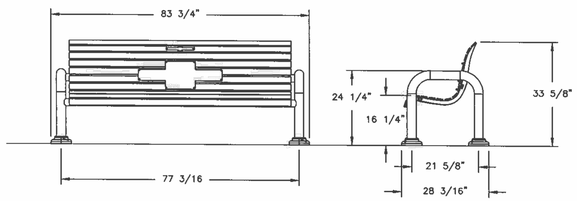

5 // L604 BEST BUDDIES BENCH
SCALE: N.T.S.

PLASTIC SLIDES – DARK BROWN

MAIN PLASTIC (HDPE) – FOREST GREEN/SAND/FOREST GREEN

ACCENTS – COBALT

STEEL ROOFS – SAND

METAL DECKS – BROWN

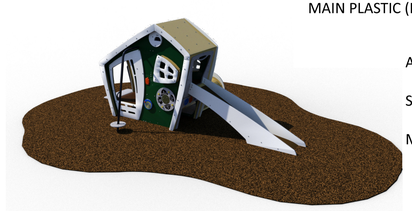



MANUFACTURER INFORMATION:
MIRACLE RECREATION
878 E HIGHWAY 60
MONETT, MO 65708
PHONE: (866) 641.3138
WEB: WWW.MIRACLE-RECREATION.COM

MODEL: MR0880
QUANTITY: 1

OR APPROVED EQUAL

6 // L604 COMMUNITY HELPER
SCALE: N.T.S.

MAIN PLASTIC (HDPE) – FOREST GREEN/SAND/FOREST GREEN

ACCENTS – COBALT





MANUFACTURER INFORMATION:
MIRACLE RECREATION
878 E HIGHWAY 60
MONETT, MO 65708
PHONE: (866) 641.3138
WEB: WWW.MIRACLE-RECREATION.COM

MODEL: MR0884
INSERTS: 714-715-204 A-MAZE-ING INSERT;
714-715-206 MAGICAL MUSIC INSERT
QUANTITY: 1

OR APPROVED EQUAL

7 // L604 GARDEN WALL
SCALE: N.T.S.

Wimer, Jones, Keefer Ltd.
landscape architecture
land planning
www.wjkld.com
23 Promenade Street, Suite 201 | Bluffton, South Carolina | 29910 | ph 843.757.7411

© 2024 WJK LTD.
DESIGN CONCEPTS, DRAWING, SHEETS, LOGOS, SPECIFICATIONS, DETAILS, WRITTEN MATERIAL SHALL NOT BE USED OR REPRODUCED IN WHOLE OR IN PART IN ANY FORM WITHOUT PRIOR WRITTEN CONSENT OF WJK LTD.

THIS SHEET TO SCALE AT: 24"X36"

SITE DEVELOPMENT PLANS
FOR
SHELTER COVE - PHASE 2
39 SHELTER COVE LANE
TOWN OF HILTON HEAD ISLAND, SOUTH CAROLINA

DATE:	NOV 11, 2025
PROJECT NO.:	22062.15
DRAWN BY:	CK, ED
CHECKED BY:	BW

DRB SUBMITTAL SET, NOT FOR CONSTRUCTION

REVISIONS:

DRAWING TITLE
SITE DETAILS - 05

DRAWING NUMBER
L604

MOUND / SLIDE / TUNNEL
ITEM NUMBER: TBD

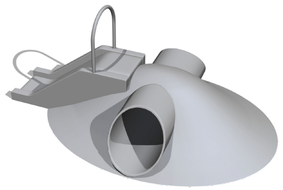

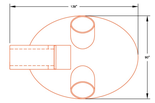

FEATURES
FUNCTIONALITY.....CLIMBER / SLIDE / TUNNEL
PRODUCT LINE.....MOUND5
FINISH.....UNDER PIP / MATTE

SPECIFICATIONS
SIZE.....~139"L x 90"W x 61"H
WEIGHT.....TBD
USE ZONE.....72"

INSTALLATION REQUIREMENTS
MOUNTING.....IN-GROUND FOOTER
BASE.....PARK & REC
MARKET.....OUTDOOR

© 2024 PlayPower, Inc. All rights reserved.
Designs are the property of PlayPower and are not to be sold or distributed to any other party without expressed written consent. Prices, colors, and designs are subject to change at the discretion of PlayPower.
13310 James E. Casey Ave. • Englewood, CO 80112 USA • 303-662-0302 • softplay.com

MANUFACTURER INFORMATION:
PLAYPOWER
13310 JAMES E. CASEY AVE.
ENGLEWOOD, CA. 80112
PHONE: (303) 662.0302
WEB: WWW.SOFTPLAY.COM

MODEL: MOUND / SLIDE /TUNNEL
COLOR: TO MATCH PLAYGROUND SURFACE
QUANTITY: 1

OR APPROVED EQUAL

1 // L605 MOUND W/ SLIDE & TUNNEL
SCALE: N.T.S.

FRAME & PANEL – SAND & DARK BROWN



ACTUAL COLORS NOT SHOWN

MANUFACTURER INFORMATION:
MIRACLE RECREATION
878 E HIGHWAY 60
MONETT, MO 65708
PHONE: (866) 641.3138
WEB: WWW.MIRACLE-RECREATION.COM

MODEL: MR4536
QUANTITY: 1

OR APPROVED EQUAL

2 // L605 CURIOSITY THRILLED THE CAT
SCALE: N.T.S.

ACCENTS – FOREST GREEN



MANUFACTURER INFORMATION:
MIRACLE RECREATION
878 E HIGHWAY 60
MONETT, MO 65708
PHONE: (866) 641.3138
WEB: WWW.MIRACLE-RECREATION.COM

MODEL: MR307
QUANTITY: 1

OR APPROVED EQUAL

3 // L605 INCLUSIVE WHIRL
SCALE: N.T.S.

SWING LEG – DARK BROWN
SWING TOP RAIL – SAND
BELT SEATS - BLACK
TOT SEATS - BLACK
PLASTIC – FOREST GREEN
SWING ROPE - BLACK

ACCENTS – FOREST GREEN

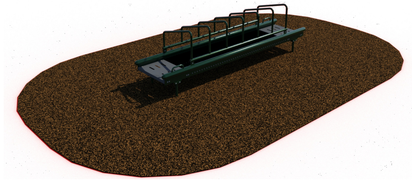

MANUFACTURER INFORMATION:
MIRACLE RECREATION
878 E HIGHWAY 60
MONETT, MO 65708
PHONE: (866) 641.3138
WEB: WWW.MIRACLE-RECREATION.COM

MODEL: MR453-5
QUANTITY: 1

OR APPROVED EQUAL

4 // L605 MOMENTUM CORRIDOR
SCALE: N.T.S.

FRAME & PANEL – SAND & DARK BROWN



ACTUAL COLORS NOT SHOWN

MANUFACTURER INFORMATION:
MIRACLE RECREATION
878 E HIGHWAY 60
MONETT, MO 65708
PHONE: (866) 641.3138
WEB: WWW.MIRACLE-RECREATION.COM

MODEL: MR4538
QUANTITY: 1

OR APPROVED EQUAL

5 // L605 MY CUP OF TEA
SCALE: N.T.S.

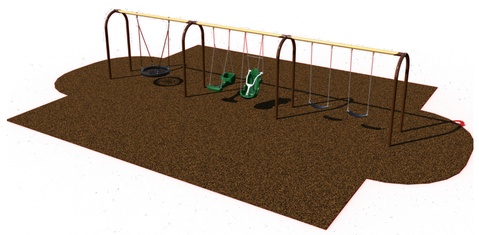

MANUFACTURER INFORMATION:
MIRACLE RECREATION
878 E HIGHWAY 60
MONETT, MO 65708
PHONE: (866) 641.3138
WEB: WWW.MIRACLE-RECREATION.COM

MODELS: (1) MR0930 3.5" 2-SEAT ARCH SWING;
(1) MR0932 3.5" 2 SEAT ARCH SWING ADD-A-BAY;
(1) MR0940 3.5" MULTI-USER ARCH SWING ADD-A-BAY
SEATS: (2) SLASHPROOF SEAT
(1) GENERATION SWING SET
(1) INCLUSIVE SWING SEAT

OR APPROVED EQUAL

6 // L605 SWING
SCALE: N.T.S.

POST – DARK BROWN
ACCENTS – SAND
PVC BENCH – BROWN
PLASTIC POST TOPPERS – FOREST GREEN, DARK BROWN, SAND
SENSORY PLASTIC – ORANGE, GREEN



MANUFACTURER INFORMATION:
MIRACLE RECREATION
878 E HIGHWAY 60
MONETT, MO 65708
PHONE: (866) 641.3138
WEB: WWW.MIRACLE-RECREATION.COM

POST: TBD
POST TOPPER: 714-680-4T SQUARE WAVE TOPPER
WALL ENCLOSURE: 714-817B WALL ENCLOSURE W/ SEAT BELOW DECK
PANELS: 714-713-11B SENSORY PANEL TEXTURED STAR CIRCLE; 714-713-13B SENSORY PANEL TEXTURED SQUARE OVAL
QUANTITY: 1

OR APPROVED EQUAL

7 // L605 TRANQUILITY CENTER
SCALE: N.T.S.

ACCENTS – GREEN

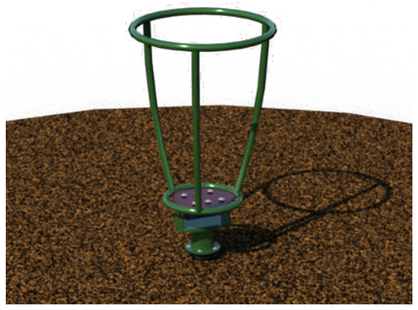

MANUFACTURER INFORMATION:
MIRACLE RECREATION
878 E HIGHWAY 60
MONETT, MO 65708
PHONE: (866) 641.3138
WEB: WWW.MIRACLE-RECREATION.COM

MODEL: MR947
QUANTITY: 1

OR APPROVED EQUAL

8 // L605 BARREL RIDE
SCALE: N.T.S.

POST – GALVANIZED
ACCENT – VIBRANT GREEN*
not available to change

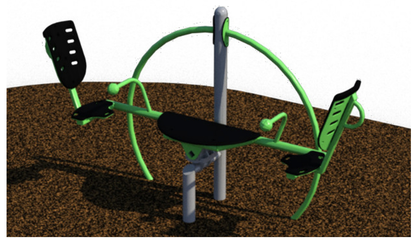

MANUFACTURER INFORMATION:
MIRACLE RECREATION
878 E HIGHWAY 60
MONETT, MO 65708
PHONE: (866) 641.3138
WEB: WWW.MIRACLE-RECREATION.COM

MODEL: MR8097781
QUANTITY: 1

OR APPROVED EQUAL

9 // L604 INCLUSIVE SEESAW
SCALE: N.T.S.

Miller, Jones, Keefer Ltd.
landscape architecture
land planning
www.wjkltd.com
233 Promenade Street, Suite 201 | Bluffton, South Carolina | 29910 | ph 843.757.7411

© 2024 WJK LTD.
DESIGN CONCEPTS, DRAWING, SHEETS, LOGOS, SPECIFICATIONS, DETAILS, WRITTEN MATERIAL SHALL NOT BE USED OR REPRODUCED IN WHOLE OR IN PART IN ANY FORM WITHOUT PRIOR WRITTEN CONSENT OF WJK LTD.

THIS SHEET TO SCALE AT: 24"X36"

SITE DEVELOPMENT PLANS
FOR
SHELTER COVE - PHASE 2
39 SHELTER COVE LANE
TOWN OF HILTON HEAD ISLAND, SOUTH CAROLINA

DATE:	NOV 11, 2025
PROJECT NO.:	22062.15
DRAWN BY:	CK, ED
CHECKED BY:	BW

DRB SUBMITTAL SET, NOT FOR CONSTRUCTION

REVISIONS:

DRAWING TITLE
SITE DETAILS - 06

DRAWING NUMBER
L605

WEB ROPE – GREEN

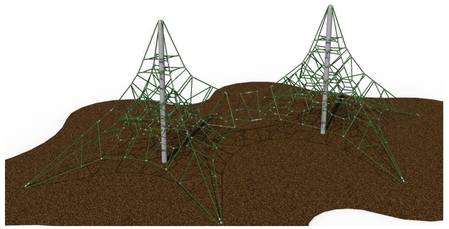

MANUFACTURER INFORMATION:
MIRACLE RECREATION
878 E HIGHWAY 60
MONETT, MO 65708
PHONE: (866) 641.3138
WEB: WWW.MIRACLE-RECREATION.COM

MODEL: MR4434 WEBSCAPES GEMINI (4M) ACTIVITY NET
QUANTITY: 1

OR APPROVED EQUAL

1 // L606 NET CLIMBER
SCALE: N.T.S.

POST – DARK BROWN

PLASTIC – FOREST GREEN



MANUFACTURER INFORMATION:
MIRACLE RECREATION
878 E HIGHWAY 60
MONETT, MO 65708
PHONE: (866) 641.3138
WEB: WWW.MIRACLE-RECREATION.COM

MODEL: MR945-1 SADDLE SEAT-ANGLED POST
QUANTITY: 1

OR APPROVED EQUAL

2 // L606 SADDLE SEAT
SCALE: N.T.S.

PLASTIC SLIDES – COBALT HOODS, SAND BEDWAY

CHAMELEON SLIDES – GREEN/FOREST GREEN

TUBE SLIDES – GREEN ENTRANCE/EXIT, SAND TUBE, COBALT RINGS

HDPE PANELS – BROWN/SAND/BROWN

POST – DARK BROWN

ACCENTS – SAND

STEEL ROOFS – SAND

FABRIC ROOFS – DESERT SAND

PVC DECKS – BROWN



MANUFACTURER INFORMATION:
MIRACLE RECREATION
878 E HIGHWAY 60
MONETT, MO 65708
PHONE: (866) 641.3138
WEB: WWW.MIRACLE-RECREATION.COM

MODEL: CUSTOM STRUCTURE
QUANTITY: 1

OR APPROVED EQUAL

3 // L606 PLAY STRUCTURE
SCALE: N.T.S.

POST – DARK BROWN

ACCENTS – SAND

SENSORY PLASTIC – ORANGE, BLUE, GREEN

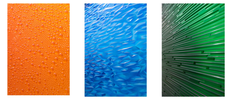

MANUFACTURER INFORMATION:
MIRACLE RECREATION
878 E HIGHWAY 60
MONETT, MO 65708
PHONE: (866) 641.3138
WEB: WWW.MIRACLE-RECREATION.COM

PANELS: (1) 714-713-11B SENSORY PANEL TEXTURED STAR CIRCLE;
(1) 714-713-12B SENSORY PANEL TEXTURED TRIANGLE HEXAGON;
(2) 714-713-13B SENSORY PANEL TEXTURED SQUARE OVAL
POSTS: TBD

OR APPROVED EQUAL

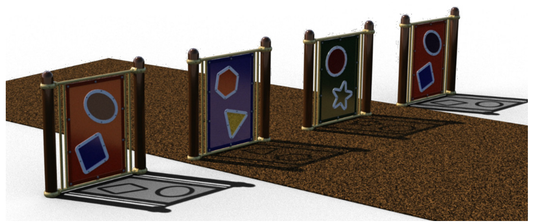

4 // L606 SENSORY WALL
SCALE: N.T.S.



MANUFACTURER INFORMATION:
PERCUSSION PLAY

PHONE: (866) 882.9170
WEB: WWW.PERCUSSIONPLAY.COM

MODEL: BABEL DRUM (LARGE)
MODEL NUMBER: PP-BABL-G-MA-GR
QUANTITY: 1

OR APPROVED EQUAL

5 // L606 LARGE BABEL
SCALE: N.T.S.

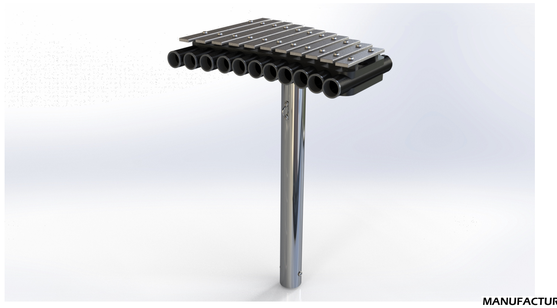

MANUFACTURER INFORMATION:
PERCUSSION PLAY

PHONE: (866) 882.9170
WEB: WWW.PERCUSSIONPLAY.COM

MODEL: CADENZA
MODEL NUMBER: TBD
QUANTITY: 1

OR APPROVED EQUAL

6 // L605 CADENZA
SCALE: N.T.S.

PercussionPlay
Outdoor Musical Instruments

Cattails Set of 6

Description

Whether you call them cattails, reeds, or bullrushes, these sleek chimes are instantly recognizable as the slender marsh plant with tall stems and dark brown velvety heads.

Perfect for playful interactions along nature trails, in parks, or in woodlands, citizens can stop and enjoy a moment of musical mindfulness while exploring the great outdoors.

Materials and Features

316 mirror polished marine grade stainless steel legs.
Aluminum chimes.
Closed end caps and PU pointed end caps supplied.
2 x 1 part vandal resistant mallets.
Vandal resistant fixings.



Tuning and Sound Level Data

A-Minor Pentatonic Set of 6 - A3, C4, D4, E4, G4, A4



Packed Dimensions	Weight (lbs)	L (in)	H (in)	W (in)
Box 1-7 (Chimes)	14	78	4	7
Box 8 (GF Stanchion)	16	26	13	3

*Surface fixing instruments will include additional packages containing fixing plates.

Find more information and watch the video here.
Standard Compliance: BS EN 1176
Warranty: Limited Twenty-Five (25), Limited Ten (10) Year & Limited Two (2) Year warranty
PP-CATTS-S6-GR

MANUFACTURER INFORMATION:
PERCUSSION PLAY

PHONE: (866) 882.9170
WEB: WWW.PERCUSSIONPLAY.COM

MODEL: CATTAILS SET OF 6
MODEL NUMBER: PP-CATT-S6-GR
QUANTITY: 1

OR APPROVED EQUAL

7 // L605 CATTAILS
SCALE: N.T.S.



MANUFACTURER INFORMATION:
PERCUSSION PLAY

PHONE: (866) 882.9170
WEB: WWW.PERCUSSIONPLAY.COM

MODEL: CONGAS PAIR (MEDIUM)
MODEL NUMBER: PP-CONG-MD-SD-GR
QUANTITY: 1

OR APPROVED EQUAL

8 // L606 CONGAS
SCALE: N.T.S.



MANUFACTURER INFORMATION:
PERCUSSION PLAY

PHONE: (866) 882.9170
WEB: WWW.PERCUSSIONPLAY.COM

MODEL: BABEL DRUM (SMALL)
MODEL NUMBER: PP-BABL-C-MA-GR
QUANTITY: 1

OR APPROVED EQUAL

9 // L606 SMALL BABEL
SCALE: N.T.S.

Wilmer Jones Deefer Ltd.
landscape architecture
land planning
www.wjkltd.com
23 Promenade Street, Suite 201 | Bluffton, South Carolina | 29910 | ph 843.757.7411

© 2024 WJK LTD.
DESIGN CONCEPTS, DRAWING, SHEETS, LOGOS, SPECIFICATIONS, DETAILS, WRITTEN MATERIAL SHALL NOT BE USED OR REPRODUCED IN WHOLE OR IN PART IN ANY FORM WITHOUT PRIOR WRITTEN CONSENT OF WJK LTD.

THIS SHEET TO SCALE AT: 24"X36"

SITE DEVELOPMENT PLANS
FOR
SHELTER COVE - PHASE 2
39 SHELTER COVE LANE
TOWN OF HILTON HEAD ISLAND, SOUTH CAROLINA

DATE:	NOV 11, 2025
PROJECT NO.:	22062.15
DRAWN BY:	CK, ED
CHECKED BY:	BW

DRB SUBMITTAL SET, NOT FOR CONSTRUCTION

REVISIONS:

DRAWING TITLE
SITE DETAILS - 07

DRAWING NUMBER
L606

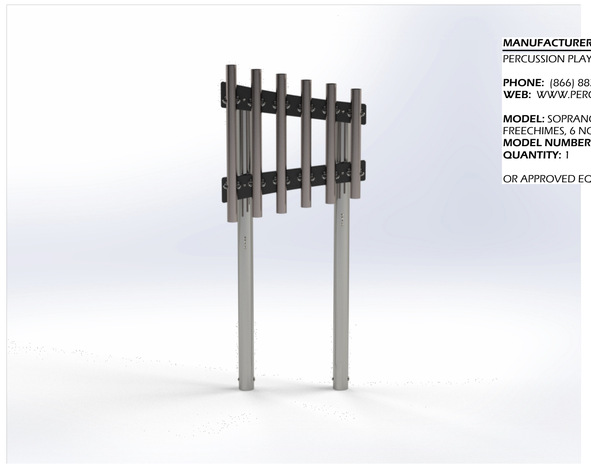

MANUFACTURER INFORMATION:
PERCUSSION PLAY

PHONE: (866) 882.9170
WEB: WWW.PERCUSSIONPLAY.COM

MODEL: SOPRANO PENTATONIC FREECHIMES, 6 NOTES
MODEL NUMBER: *PP-FREC-SO-PE-GR*
QUANTITY: 1

OR APPROVED EQUAL

1 // L607 FREECHIMES
SCALE: N.T.S.

PercussionPlay
Outdoor Musical Instruments

Temple Block Tree

Description

Inspired by the Muyu or slit drum from eastern Asia. With its resonant, durable reinforced polymer blocks in a natural stone color and polished stainless steel leg, this instrument produces a unique, hollow tone that will add a fun and dynamic sound to your compositions.

When struck with the included mallets, each block produces a satisfying 'pop' sound. Players can strike the blocks' top surface or rims to produce a hollow yet bright, penetrating sound. As an idiophone, the sound is produced by the vibration of the instrument itself, with each block's internal space functioning as a resonating chamber.

The Temple Block Tree features a 'branch' configuration of two sets of five blocks graduating in size, with the largest block producing the lowest sound and the smallest block having the highest sound.



Tuning and Sound Level Data
Unpitched Percussion

Materials and Features
316 mirror polished marine grade stainless steel stand.
Durable reinforced polymer blocks.
Vandal resistant fixings.

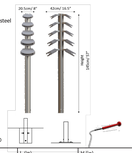

Packed Dimensions	Weight (lb)	L (in)	H (in)	W (in)
Box 1	31	77	4	6
Box 2	11	8	12	12

*Surface fixing instruments will include additional packages containing fixing plates.

Find more information here.

Warranty: Limited Twenty-Five (25), Limited Ten (10) Year & Limited Two (2) Year warranty
TEMP/issue 001

MANUFACTURER INFORMATION:
PERCUSSION PLAY

PHONE: (866) 882.9170
WEB: WWW.PERCUSSIONPLAY.COM

MODEL: TEMPLE BLOCK TREE
MODEL NUMBER: PP-TEMP-GR
QUANTITY: 1

OR APPROVED EQUAL

2 // L607 TEMPLE BLOCK TREE
SCALE: N.T.S.

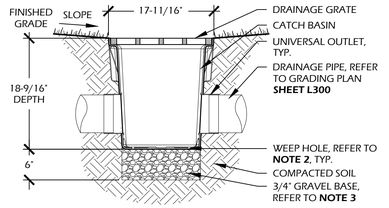

MANUFACTURER INFO:
NATIONAL DIVERSIFIED SALES, INC.
851 N. HARVARD AVE.
LINDSAY, CA. 93247
PHONE: (800) 726.1994
WEB: WWW.NDSPRO.COM

DRAINAGE GRATE: #1811, 18"X18" SQUARE GRATE
GRATE COLOR: BLACK
GRATE INFO: STRUCTURAL FOAM POLYOLEFIN GRATE WITH U.V. INHIBITOR

CATCH BASIN: #1882, 18"X18" CATCH BASIN, 2 OPENINGS
#1884, 18"X18" CATCH BASIN, 4 OPENINGS, REFER TO SHEET **L300**
BASIN COLOR: BLACK
BASIN INFO: ONE PIECE TAPERED CATCH BASIN STRUCTURAL FOAM POLYOLEFIN

UNIVERSAL OUTLET: VARIES, REFER TO SHEET **L300** AND **NOTE 6**
OUTLET COLOR: BLACK
OUTLET INFO: STYRENE, USE ADAPTER PLUG AS REQUIRED (WHERE ONLY ONE DRAIN LINE RUNS INTO CATCH BASIN)

RISER: #1816, 18"X18" CATCH BASIN RISER, BLACK, STYRENE, USE AS REQUIRED

NOTES:
1. THIS DETAIL IS USED FOR DESIGN INTENT ONLY. REFER TO TO MANUFACTURERS DETAIL AND SPECIFICATIONS FOR ACTUAL INSTALLATION.
2. DRILL 1/8" WEEP HOLE TYPICAL OF 4 PLACES AT BOTTOM CORNERS.
3. GRAVEL BASE SHALL BE USED TO PREVENT STANDING WATER.
4. GRATE TO BE ATTACHED TO CATCH BASIN WITH SCREW(S) PROVIDED AT TIME OF INSTALLATION.
5. RISER (IF NEEDED) CAN BE CUT TO ACHIEVE EXACT ELEVATION, DO NOT USE OVER FIVE (5) RISERS WITH CATCH BASIN.
6. N.D.S. ADAPTERS THAT FIT THIS CATCH BASIN ARE AS FOLLOWS: #1242, #1243, #1245, #1266, #1888 AND #1889, USE #1206 IF PLUGGING AN OUTLET. INCLUDES (2) #1890 REDUCER RINGS USED WITH SMALLER CONNECTIONS.
7. EXISTING SOILS SHOULD BE EVALUATED TO ENSURE PROPER STRUCTURAL AND PERMEABILITY PROPERTIES.
8. DO NOT SCALE DRAWING.
9. THIS DRAWING IS INTENDED FOR USE BY ARCHITECTS, ENGINEERS, CONTRACTORS, CONSULTANTS AND DESIGN PROFESSIONALS FOR PLANNING PURPOSES ONLY.
10. ALL INFORMATION CONTAINED HEREIN WAS CURRENT AT THE TIME OF DEVELOPMENT BUT MUST BE REVIEWED AND APPROVED BY THE PRODUCT MANUFACTURER TO BE CONSIDERED ACCURATE.
11. CONTRACTORS NOTE: FOR PRODUCT AND COMPANY INFORMATION VISIT WWW.CADDETAILS.COM/INFO AND ENTER REFERENCE NUMBER 558-193 AND / OR 558-198.

NDS We put water in its place
558-193 / 558-198
PROTECTED BY COPYRIGHT ©2015 CADDETAILS.COM LTD.
REVISION DATE 09/23/2015
CADdetails.com

KEY COMPONENT
www.ndspro.com/ss

3 // L607 18" AREA DRAIN
SCALE: N.T.S.

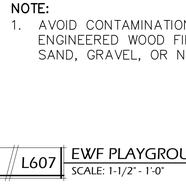

SECTION

MANUFACTURER INFO:
NATIONAL DIVERSIFIED SALES, INC.
851 N. HARVARD AVE.
LINDSAY, CA. 93247
PHONE: (800) 726.1994
WEB: WWW.NDSPRO.COM

PIPE: #EZ-1501F, 15" MESH WITH 6" CORRUGATED PERFORATED PIPE
PIPE COLOR: BLACK
PIPE INFO: POLYETHYLENE SLOTTED DRAIN PIPE SURROUNDED BY 100% RECYCLED POLYSTYRENE AGGREGATE AND ENCLOSED IN 30-SIEVE POLYETHYLENE GEOTEXTILE MESH

COUPLING: #6C07, 6" CORRUGATED INTERNAL COUPLING, AS REQUIRED
COUPLING COLOR: BLACK
END CAP: #6C06, 6" CORRUGATED END CAP, AS REQUIRED.
END CAP COLOR: BLACK

NDS We put water in its place
558-028
PROTECTED BY COPYRIGHT ©2015 CADDETAILS.COM LTD.
REVISION DATE 09/23/2015
CADdetails.com

SOIL INFO:
SOIL BACK FILL: TOP SOIL BACK FILL, OR GRAVEL WITH 3" TOP SOIL IN CLAY AREAS

STORAGE AND FLOW INFO:

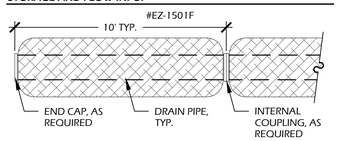

STORAGE VOLUME = 45.8 GALLONS
(6.1225 CU. FT.) PER SECTION. FLOW RATE = 345.0 GPM (1% SLOPE)

NOTES:
1. INSTALL PER MANUFACTURER'S SPECIFICATIONS.
2. ADDITIONAL COVER MAY BE REQUIRED BASED ON SITE CONDITIONS. 12" COVER REQUIRED TO OBTAIN AN H-10 LOAD RATING.
3. DO NOT SCALE DRAWING.
4. ALL INFORMATION CONTAINED HEREIN WAS CURRENT AT THE TIME OF DEVELOPMENT BUT MUST BE REVIEWED AND APPROVED BY THE PRODUCT MANUFACTURER TO BE CONSIDERED ACCURATE.
5. CONTRACTORS NOTE: FOR PRODUCT AND COMPANY INFORMATION VISIT WWW.CADDETAILS.COM/INFO AND ENTER REFERENCE NUMBER 558-028

4 // L607 6" FRENCH DRAIN
SCALE: N.T.S.

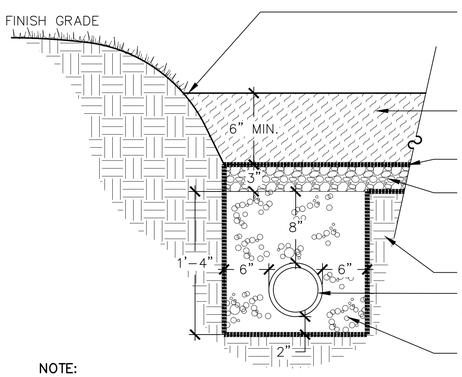

NATURAL EDGE OR 3:1 – 2:1 SLOPES TO HOLD IN MULCH, REFER TO PLAN, SHEET L500.

6" MIN. ENGINEERED WOOD FIBER MULCH, OR APPROVED EQUAL

FIBARFELT GEOTEXTILE FABRIC OR APPROVED EQUAL

PROVIDE 3" OF #67 BLEND ANGULAR DRAINAGE STONE OVER BOTTOM LAYER OF FIBARFELT GEOTEXTILE FABRIC (WASHED CLEAN)

EXISTING SUBGRADE

6" PERFORATED ADS DRAIN PIPE (ALTERNATE: NDS EZ FLOW FRENCH DRAIN)

#57 WASHED STONE, TYP.

NOTE:
1. AVOID CONTAMINATION OF ENGINEERED WOOD FIBAR WITH SAND, GRAVEL, OR NATIVE SOIL.

MANUFACTURERS INFORMATION:
THE FIBAR GROUP, LLC.
80 BUSINESS PARK DRIVE, SUITE 300
ARMONK, NY. 10504
PHONE: (800) 342-2721
WEB: WWW.FIBAR.COM

OR APPROVED EQUAL

7 // L607 EWF PLAYGROUND MULCH
SCALE: 1-1/2" - 1'-0"

Stilts
NRO806

KOMPAN Let's play

Item no. NRO806-0601	
General Product Information	
Dimensions LxWxH	4'2"x8'1"x3'7"
Age group	5 - 12
Play capacity (users)	3
Color options	



The Stilts are a playground classic that appeal to children repeatedly. The Stilts have a basic play message: balance through without touching the ground. The Stilts invite jumping or balancing from one to the next. They can also be used as individual seats and cater to meeting in groups. The Stilts support children who are developing their skills, thanks to their foot-steps and inclination: children can always lean to the side to regain balance. When balancing from stilt to stilt, children train their proprioception and sense of balance. Balance and proprioception are fundamental in confidently managing the body in space. Crossing the Stilts with friends trains turn-taking and negotiation. These are important social-emotional skills that are basic to the ability to form friendships and relate to peers.

1 / 05/02/2025

Data is subject to change without prior notice.

5 // L607 LOG STILTS
SCALE: N.T.S.

Triple Balance Beam
NRO889

KOMPAN Let's play

Item no. NRO889-0601	
General Product Information	
Dimensions LxWxH	24'8"x7'7"x1'3"
Age group	5 - 12
Play capacity (users)	6
Color options	



The Triple Balance Beam is a great playground classic that attracts children again and again. It can function as a playground centerpieces, helping to connect activities. It can also function as a point for a break, providing seating for children sharing, or parents or caregivers in need of a point from which to observe play. When children balance across the Triple Balance Beam, they train their equilibrium immensely. The sense of balance is a fundamental motor skill that is basic for the development of all other skills. The sense of balance for instance makes it possible for children to sit still and concentrate, so the fun of physical play supports this important part of child development. The spaciousness also allows for substantial social interaction and cooperative play.

1 / 12/10/2024

Data is subject to change without prior notice.

6 // L607 LOG BALANCE BEAM
SCALE: N.T.S.

Wimer, Jones, Keefer Ltd.
landscape architecture
land planning
www.wjkltd.com
23 Promenade Street, Suite 201 | Bluffton, South Carolina | 29910 | ph 843.757.7411

© 2024 WJK LTD.
DESIGN CONCEPTS, DRAWING, SHEETS, LOGOS, SPECIFICATIONS, DETAILS, WRITTEN MATERIAL SHALL NOT BE USED OR REPRODUCED IN WHOLE OR IN PART IN ANY FORM WITHOUT PRIOR WRITTEN CONSENT OF WJK LTD.

THIS SHEET TO SCALE AT: 24"X36"

SITE DEVELOPMENT PLANS
FOR
SHELTER COVE - PHASE 2
39 SHELTER COVE LANE
TOWN OF HILTON HEAD ISLAND, SOUTH CAROLINA

DATE:	NOV 11, 2025
PROJECT NO.:	22062.15
DRAWN BY:	CK, ED
CHECKED BY:	BW

DRB SUBMITTAL SET, NOT FOR CONSTRUCTION

REVISIONS:

DRAWING TITLE
SITE DETAILS - 08

DRAWING NUMBER
L607

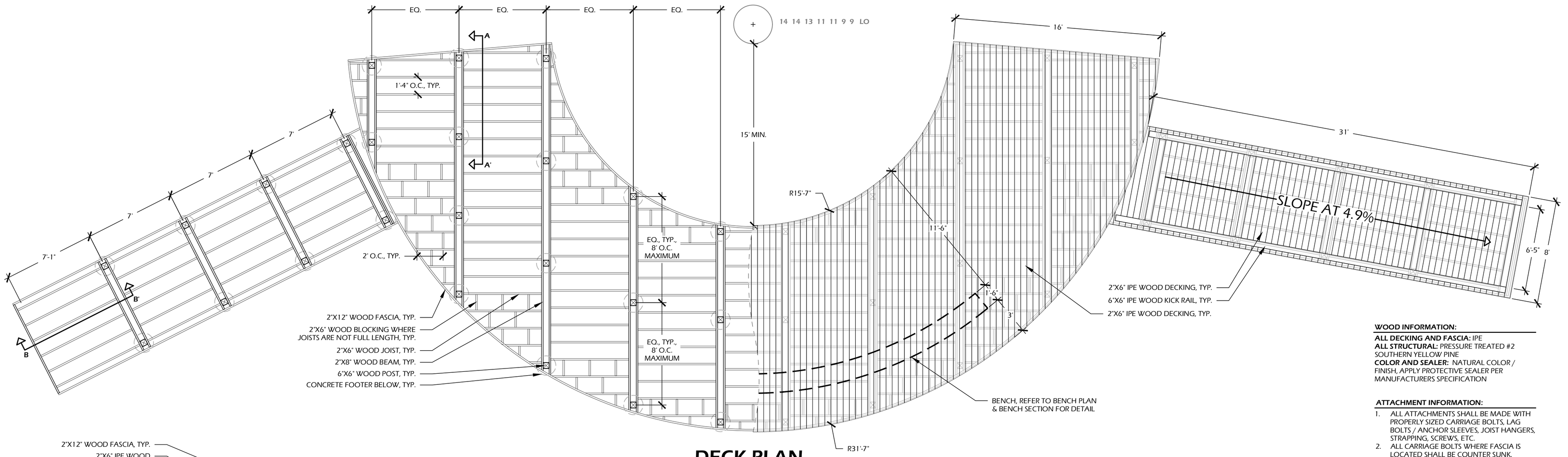

DECK PLAN
SCALE: 1/4" - 1'-0"

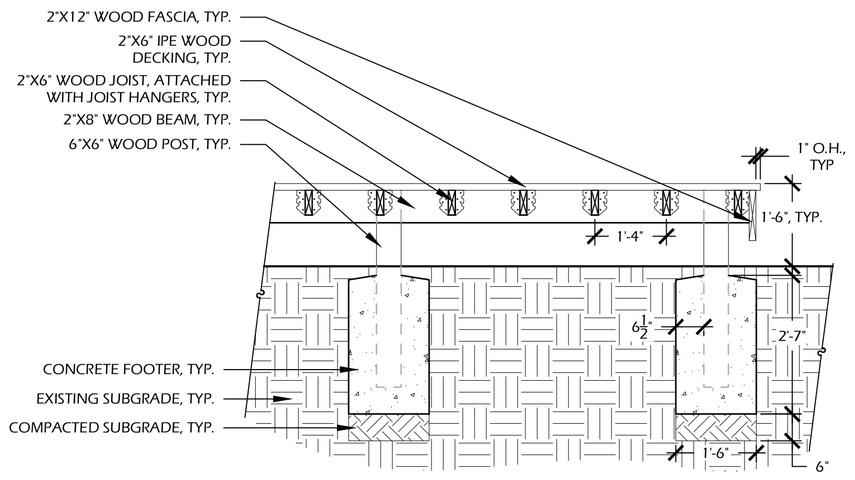

DECK SECTION A - A'
SCALE: 1/2" - 1'-0"

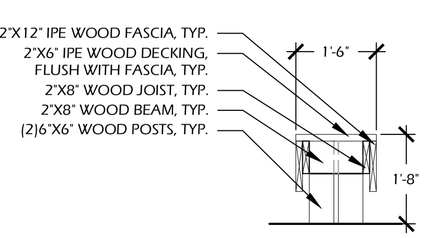

BENCH SECTION A - A'
SCALE: 1/2" - 1'-0"

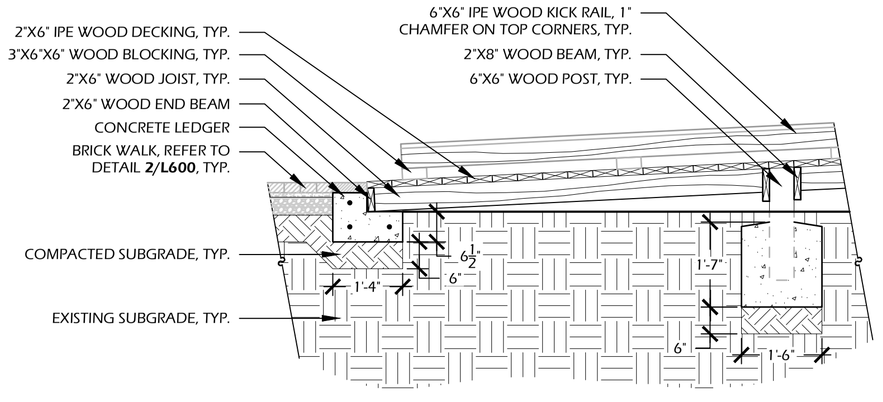

RAMP SECTION B - B'
SCALE: 1/2" - 1'-0"

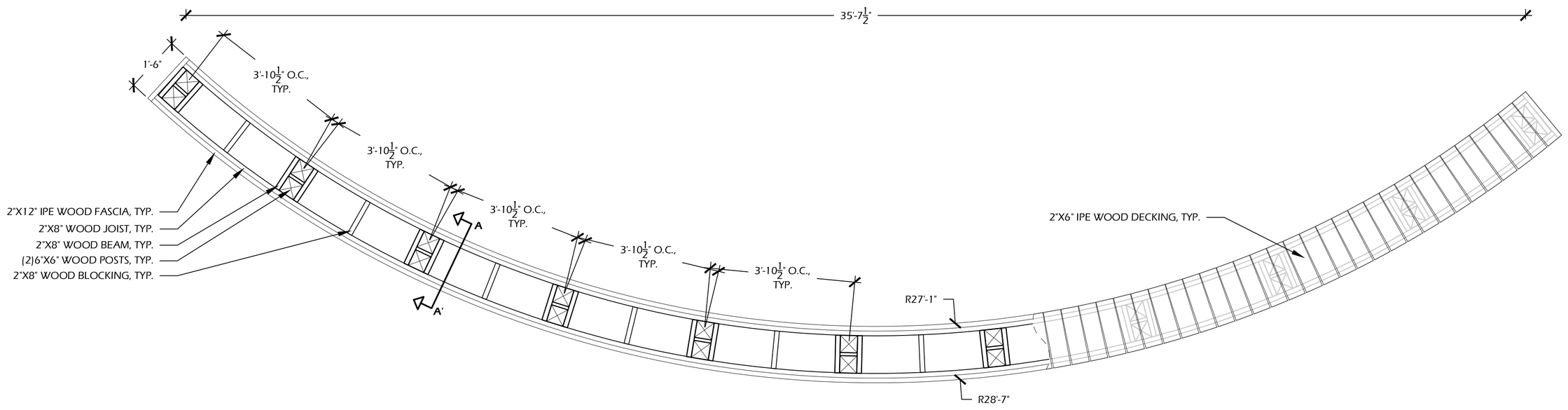

BENCH PLAN
SCALE: 1/2" - 1'-0"

WOOD INFORMATION:

ALL DECKING AND FASCIA: IPE
ALL STRUCTURAL: PRESSURE TREATED #2 SOUTHERN YELLOW PINE
COLOR AND SEALER: NATURAL COLOR / FINISH, APPLY PROTECTIVE SEALER PER MANUFACTURERS SPECIFICATION

ATTACHMENT INFORMATION:

1. ALL ATTACHMENTS SHALL BE MADE WITH PROPERLY SIZED CARRIAGE BOLTS, LAG BOLTS / ANCHOR SLEEVES, JOIST HANGERS, STRAPPING, SCREWS, ETC.
2. ALL CARRIAGE BOLTS WHERE FASCIA IS LOCATED SHALL BE COUNTER SUNK.

OTHER INFORMATION:

CONCRETE: 3,000 P.S.I. AT 28 DAYS
SOIL COMPACTION: 95% STANDARD PROCTOR

NOTES:

1. ALL DECKING SHALL BE PLACED BARK SIDE UP.
2. ALL ATTACHMENTS SHALL BE WITH STAINLESS STEAL SCREWS SUITABLE FOR PRESSURE TREATED WOOD. NO NAILS SHALL BE USED.

1 // L608 OBSERVATION PLATFORM AND CURVED BENCH
SCALE: VARIES

Winer, Jones, Keefer Ltd.
landscape architecture
land planning
www.wjkltd.com
23 Promenade Street, Suite 201 | Bluffton, South Carolina | 29910 | ph 843.757.7411

© 2024 WJK LTD.
DESIGN CONCEPTS, DRAWING, SHEETS, LOGOS, SPECIFICATIONS, DETAILS, WRITTEN MATERIAL SHALL NOT BE USED OR REPRODUCED IN WHOLE OR IN PART IN ANY FORM WITHOUT PRIOR WRITTEN CONSENT OF WJK LTD.

THIS SHEET TO SCALE AT: 24"X36"

SITE DEVELOPMENT PLANS
FOR

SHELTER COVE - PHASE 2

39 SHELTER COVE LANE
TOWN OF HILTON HEAD ISLAND, SOUTH CAROLINA

DATE:	NOV 11, 2025
PROJECT NO.:	22062.15
DRAWN BY:	CK, ED
CHECKED BY:	BW

DRB SUBMITTAL SET, NOT FOR CONSTRUCTION

REVISIONS:

DRAWING TITLE
SITE DETAILS - 09

DRAWING NUMBER
L608

VIEW 4

SHELTER COVE BEST BUDDIES PARK - REV C – HILTON HEAD, SC

RENDERING IS FOR CONCEPTUAL PURPOSES; ACTUAL PRODUCT MAY VARY

MP250022-03-4



VIEW 15

SHELTER COVE BEST BUDDIES PARK - REV C – HILTON HEAD, SC

RENDERING IS FOR CONCEPTUAL PURPOSES; ACTUAL PRODUCT MAY VARY

MP250022-03-15



VIEW 17

SHELTER COVE BEST BUDDIES PARK - REV C – HILTON HEAD, SC

RENDERING IS FOR CONCEPTUAL PURPOSES; ACTUAL PRODUCT MAY VARY

MP250022-03-17



VIEW 6

SHELTER COVE BEST BUDDIES PARK - REV C – HILTON HEAD, SC

RENDERING IS FOR CONCEPTUAL PURPOSES; ACTUAL PRODUCT MAY VARY

MP250022-03-6



Wilmer Jones Keefer Ltd.
landscape architecture
land planning
www.wjkld.com
23 Promenade Street, Suite 201 | Bluffton, South Carolina | 29910 | ph 843.757.7411

© 2024 WJK LTD.
DESIGN CONCEPTS, DRAWING, SHEETS, LOGOS, SPECIFICATIONS, DETAILS, WRITTEN MATERIAL SHALL NOT BE USED OR REPRODUCED IN WHOLE OR IN PART IN ANY FORM WITHOUT PRIOR WRITTEN CONSENT OF WJK LTD.

THIS SHEET TO SCALE AT: 24"X36"

SITE DEVELOPMENT PLANS
FOR

SHELTER COVE - PHASE 2

39 SHELTER COVE LANE
TOWN OF HILTON HEAD ISLAND, SOUTH CAROLINA

DATE:	NOV 11, 2025
PROJECT NO.:	22062.15
DRAWN BY:	CK, ED
CHECKED BY:	BW

DRB SUBMITTAL SET, NOT FOR CONSTRUCTION

REVISIONS:

DRAWING TITLE
PLAYGROUND IMAGERY - 01

DRAWING NUMBER
L609



VIEW 20

SHELTER COVE BEST BUDDIES PARK - REV C - HILTON HEAD, SC

MP2500022-03-20

RENDERING IS FOR CONCEPTUAL PURPOSES; ACTUAL PRODUCT MAY VARY



VIEW 11

SHELTER COVE BEST BUDDIES PARK - REV C - HILTON HEAD, SC

MP2500022-03-11

RENDERING IS FOR CONCEPTUAL PURPOSES; ACTUAL PRODUCT MAY VARY



VIEW 1

SHELTER COVE BEST BUDDIES PARK - REV C - HILTON HEAD, SC

MP2500022-03-1

RENDERING IS FOR CONCEPTUAL PURPOSES; ACTUAL PRODUCT MAY VARY



VIEW 7

SHELTER COVE BEST BUDDIES PARK - REV C - HILTON HEAD, SC

MP2500022-03-7

RENDERING IS FOR CONCEPTUAL PURPOSES; ACTUAL PRODUCT MAY VARY

SITE DEVELOPMENT PLANS

FOR

SHELTER COVE - PHASE 2

39 SHELTER COVE LANE

TOWN OF HILTON HEAD ISLAND, SOUTH CAROLINA

DATE:	NOV 11, 2025
PROJECT NO.:	22062.15
DRAWN BY:	CK, ED
CHECKED BY:	BW

DRB SUBMITTAL SET, NOT FOR CONSTRUCTION

REVISIONS:

DRAWING TITLE

PLAYGROUND IMAGERY - 02

DRAWING NUMBER

L610

Witmer Jones Keefe Ltd.

landscape architecture land planning

29 Promenade Street, Suite 201 | Bluffton, South Carolina | 29910 | ph: 843.757.7411

www.wjktd.com

© 2024 WJK LTD.

DESIGN CONCEPTS, DRAWING, SHEETS, LOGOS, SPECIFICATIONS, DETAILS OR REPRODUCED IN WHOLE OR IN PART WITHOUT PRIOR WRITTEN CONSENT OF WJK LTD.

THIS SHEET TO SCALE AT: 24"X36".

VIEW 1

SHELTER COVE BEST BUDDIES PARK - REV C – HILTON HEAD, SC

RENDERING IS FOR CONCEPTUAL PURPOSES; ACTUAL PRODUCT MAY VARY

MP250022-03-1



VIEW 2

SHELTER COVE BEST BUDDIES PARK - REV C – HILTON HEAD, SC

RENDERING IS FOR CONCEPTUAL PURPOSES; ACTUAL PRODUCT MAY VARY

MP250022-03-2



VIEW 3

SHELTER COVE BEST BUDDIES PARK - REV C – HILTON HEAD, SC

RENDERING IS FOR CONCEPTUAL PURPOSES; ACTUAL PRODUCT MAY VARY

MP250022-03-3



VIEW 4

SHELTER COVE BEST BUDDIES PARK - REV C – HILTON HEAD, SC

RENDERING IS FOR CONCEPTUAL PURPOSES; ACTUAL PRODUCT MAY VARY

MP250022-03-4



SHELTER COVE BEST BUDDIES PARK - REV C – HILTON HEAD, SC

RENDERING IS FOR CONCEPTUAL PURPOSES; ACTUAL PRODUCT MAY VARY



VIEW 6

SHELTER COVE BEST BUDDIES PARK - REV C – HILTON HEAD, SC

RENDERING IS FOR CONCEPTUAL PURPOSES; ACTUAL PRODUCT MAY VARY

MP250022-03-6



SHELTER COVE BEST BUDDIES PARK - REV C – HILTON HEAD, SC

RENDERING IS FOR CONCEPTUAL PURPOSES; ACTUAL PRODUCT MAY VARY



Miracle

SHELTER COVE BEST BUDDIES PARK - REV C – HILTON HEAD, SC

RENDERING IS FOR CONCEPTUAL PURPOSES; ACTUAL PRODUCT MAY VARY



SHELTER COVE BEST BUDDIES PARK - REV C – HILTON HEAD, SC

RENDERING IS FOR CONCEPTUAL PURPOSES; ACTUAL PRODUCT MAY VARY



SHELTER COVE BEST BUDDIES PARK - REV C – HILTON HEAD, SC

RENDERING IS FOR CONCEPTUAL PURPOSES; ACTUAL PRODUCT MAY VARY



Miracle

RENDERING IS FOR CONCEPTUAL PURPOSES; ACTUAL PRODUCT MAY VARY



RENDERING IS FOR CONCEPTUAL PURPOSES; ACTUAL PRODUCT MAY VARY



SHELTER COVE BEST BUDDIES PARK - REV C – HILTON HEAD, SC

RENDERING IS FOR CONCEPTUAL PURPOSES; ACTUAL PRODUCT MAY VARY



Miracle

SHELTER COVE BEST BUDDIES PARK - REV C – HILTON HEAD, SC

RENDERING IS FOR CONCEPTUAL PURPOSES; ACTUAL PRODUCT MAY VARY



SHELTER COVE BEST BUDDIES PARK - REV C – HILTON HEAD, SC

RENDERING IS FOR CONCEPTUAL PURPOSES; ACTUAL PRODUCT MAY VARY



Miracle

SHELTER COVE BEST BUDDIES PARK - REV C – HILTON HEAD, SC

RENDERING IS FOR CONCEPTUAL PURPOSES; ACTUAL PRODUCT MAY VARY







SHELTER COVE BEST BUDDIES PARK - REV C – HILTON HEAD, SC

RENDERING IS FOR CONCEPTUAL PURPOSES; ACTUAL PRODUCT MAY VARY



SHELTER COVE BEST BUDDIES PARK - REV C – HILTON HEAD, SC

RENDERING IS FOR CONCEPTUAL PURPOSES; ACTUAL PRODUCT MAY VARY



Miracle

SHELTER COVE BEST BUDDIES PARK - REV C – HILTON HEAD, SC

RENDERING IS FOR CONCEPTUAL PURPOSES; ACTUAL PRODUCT MAY VARY



SHELTER COVE BEST BUDDIES PARK - REV C – HILTON HEAD, SC

2-5 FREE STANDING – COMMUNITY HELPER SPECIFICATIONS FOR SUBMITTAL

ACCENTS – COBALT

STEEL ROOFS – SAND

METAL DECKS – BROWN 

PLASTIC SLIDES – DARK BROWN

MAIN PLASTIC (HDPE) – FOREST GREEN/SAND/FOREST GREEN 

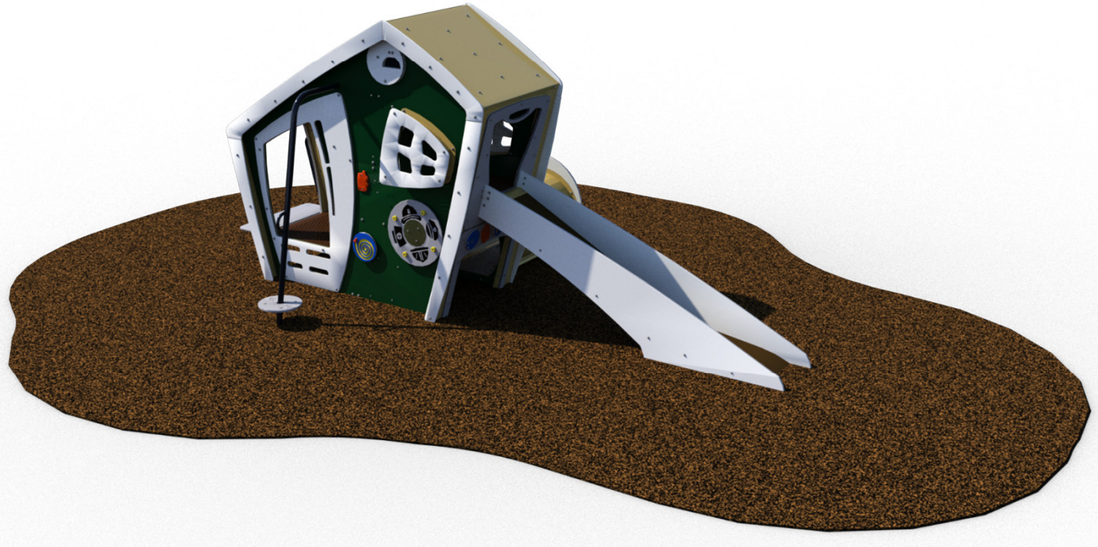



Mini City - Community Helper, Truck, Playhouse, Silly Tree, Garden Crawl Tunnel, Sensory Garden Wall (Double Sided), Traffic Light, Chattery

MR0880, MR0880BD
Mini City Community Helpers

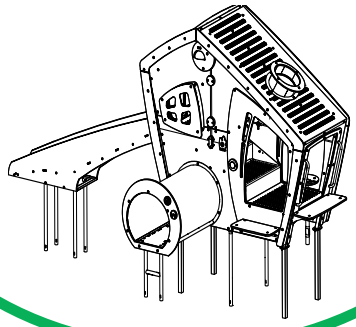

MR0881, MR0881BD
Mini City Truck

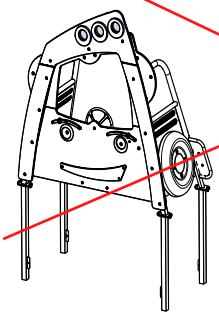

MR0882, MR0882BD
Mini City Playhouse

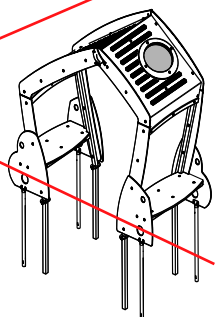

MR0883, MR0883BD
Mini City Garden Crawl

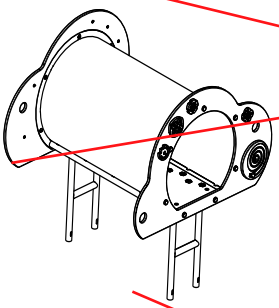

MR0884, MR0884BD
Mini City Sensory Garden
Wall Double Sided

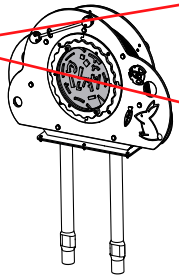

MR0885, MR0885BD
Mini City Silly Tree

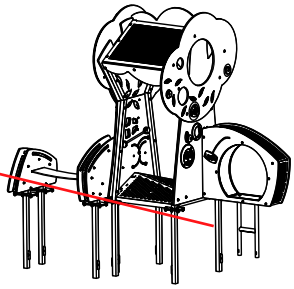

MR0886, MR0886BD
Mini City Traffic Light



MR0887, MR0887BD
Mini City Chattery

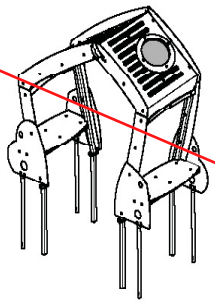

MR0888, MR0888BD
Mini City Sensory Garden
Wall Single Sided

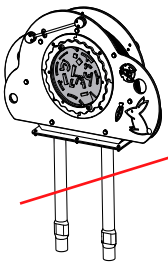

MR0889, MR0889BD
Mini City Community Helpers
w/o Crawl Tube

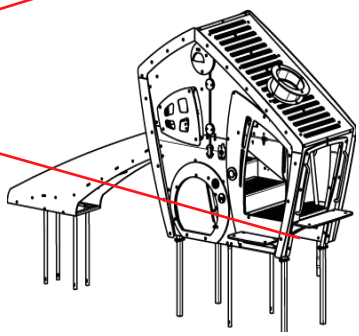

Consult Miracle's "Glossary of Technical Data for Materials, Processes and Finishes" for specifications of underlined items.

Mini City - Community Helper, Truck, Playhouse, Silly Tree, Garden Crawl Tunnel, Sensory Garden Wall (Double Sided), Traffic Light, Chattery

MODEL	PRODUCT	GROUND SPACE	CONCRETE
MR0880	Mini City Community Helpers (In-Ground)	29'-0" x 23'-0"	1.10 cu. yds.
MR0880BD	Mini City Community Helpers (Bolt Down)	29'-0" x 23'-0"	1.10 cu. yds.
MR0881	Mini City Truck (In-Ground)	NA	0.24 cu. yds.
MR0881BD	Mini City Truck (Bolt Down)	NA	0.24 cu. yds.
MR0882	Mini City Playhouse (In-Ground)	14'-0" x 17'-0"	0.48 cu. yds.
MR0882BD	Mini City Playhouse (Bolt Down)	14'-0" x 17'-0"	0.48 cu. yds.
MR0883	Mini City Garden Crawl (In-Ground)	17'-0' x 17'-0'	0.06 cu. yds.
MR0883BD	Mini City Garden Crawl (Bolt Down)	17'-0' x 17'-0'	0.06 cu. yds.
MR0884	Mini City Sensory Garden Wall Double Sided (In-Ground)	NA	0.12 cu. yds.
MR0884BD	Mini City Sensory Garden Wall Double Sided (Bolt Down)	NA	0.12 cu. yds.
MR0885	Mini City Silly Tree (In-Ground)	23'-0" x 18'-0"	NA
MR0885BD	Mini City Silly Tree (Bolt Down)	23'-0" x 18'-0"	NA
MR0886	Mini City Traffic Light (In-Ground)	NA	0.13 cu. yds.
MR0886BD	Mini City Traffic Light (Bolt Down)	NA	0.13 cu. yds.
MR0887	Mini City Chattery (In-Ground)	NA	0.48 cu. yds.
MR0887BD	Mini City Chattery (Bolt Down)	NA	0.48 cu. yds.
MR0888	Mini City Sensory Garden Wall Single Sided (In-Ground)	NA	0.12 cu. yds.
MR088BD	Mini City Sensory Garden Wall Single Sided (Bolt Down)	NA	0.12 cu. yds.
MR0889	Mini City Community Helpers w/o Crawl Tube (In-Ground)	29'-0" x 20'-0"	1.10 cu. yds.
MR0889BD	Mini City Community Helpers w/o Crawl Tube(Bolt Down)	29'-0" x 20'-0"	1.10 cu. yds.

DESCRIPTION

The Mini City Playhouses are designed to be enjoyed by children of all abilities, including autism, developmental delays and those that use mobility devices. Children can use their imagination, improve strength, agility and mobility.

MATERIALS

Steel Frame: Shall be constructed from 2" square tubing, 16-gage galvanized steel tubing, 1/4" steel plates.

Steel Frame: (Sensory Garden Wall, Traffic Light) Shall be constructed from 12-gage and 14-gage galvanized steel.

Steel Roof/End Walls: Shall be constructed from 12-gage galvanized steel plate.

Stairs: Shall be constructed from 12-gage steel coated with durable, thermoplastic coating.

Deck Platform: Shall be constructed from 12-gage steel coated with durable, thermoplastic coating.

Consult Miracle's "Glossary of Technical Data for Materials, Processes and Finishes" for specifications of underlined items.

Mini City - Community Helper, Truck, Playhouse, Silly Tree, Garden Crawl Tunnel, Sensory Garden Wall (Double Sided), Traffic Light, Chattery

MATERIALS cont.

Rope:	Shall be 16mm rope with aluminum connector.
Steel Crawl Tube:	Shall be constructed from 14-gage galvanized steel, 8-gage galvanized steel, 1-1/4" pipe, 13-gage galvanized steel tubing.
Steel Climber:	Shall be constructed from 1-1/2" pipe, 13-gage galvanized steel tubing, 8-gage and 1/4" steel plate.
Plastic Slide:	Shall be 1/2" HDPE bedway, 3/4" HDPE sides.
Plastic Steps/Seat:	Shall be 3/4" textured HDPE.
Plastic Walls/Ends/ Panels:	Shall be 3/4" HDPE.
Plastic Tire:	Shall be rotationally molded LLDPE.
Skylight: (Chattery)	Shall be 1/4" Koda XT.
Skylight: (Playhouse, Chattery)	Shall be 3/16" screen printed Lexan.
Castings:	Shall be 319 aluminum.
Finishes:	Finishes shall be in Mira-Cote.
Fasteners:	All fastening hardware shall be Fastener Style A.
Shelves:	Shall be constructed from 12-gage steel.
Graphic Panels:	Shall be 1/4" fiberglass signs.
Dog Door/Belt Bridge:	Shall be 3/8" Flextread.
Colored Lenses:	Shall be 1/8" acrylic colored panels with 3/16" Lexan covers.

Consult Miracle's "Glossary of Technical Data for Materials, Processes and Finishes" for specifications of underlined items.

ACCENTS – COBALT

MAIN PLASTIC (HDPE) – FOREST GREEN/SAND/FOREST GREEN

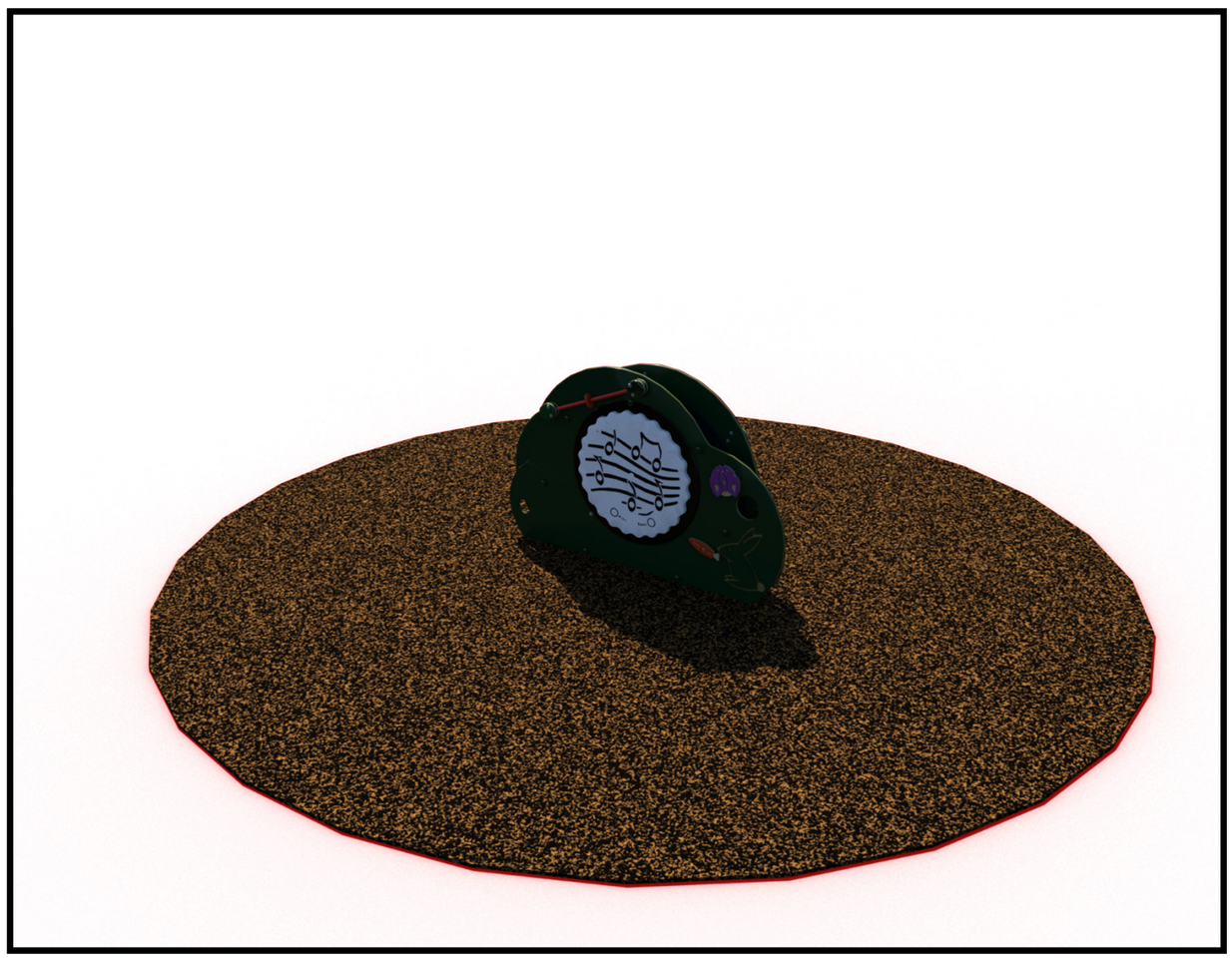

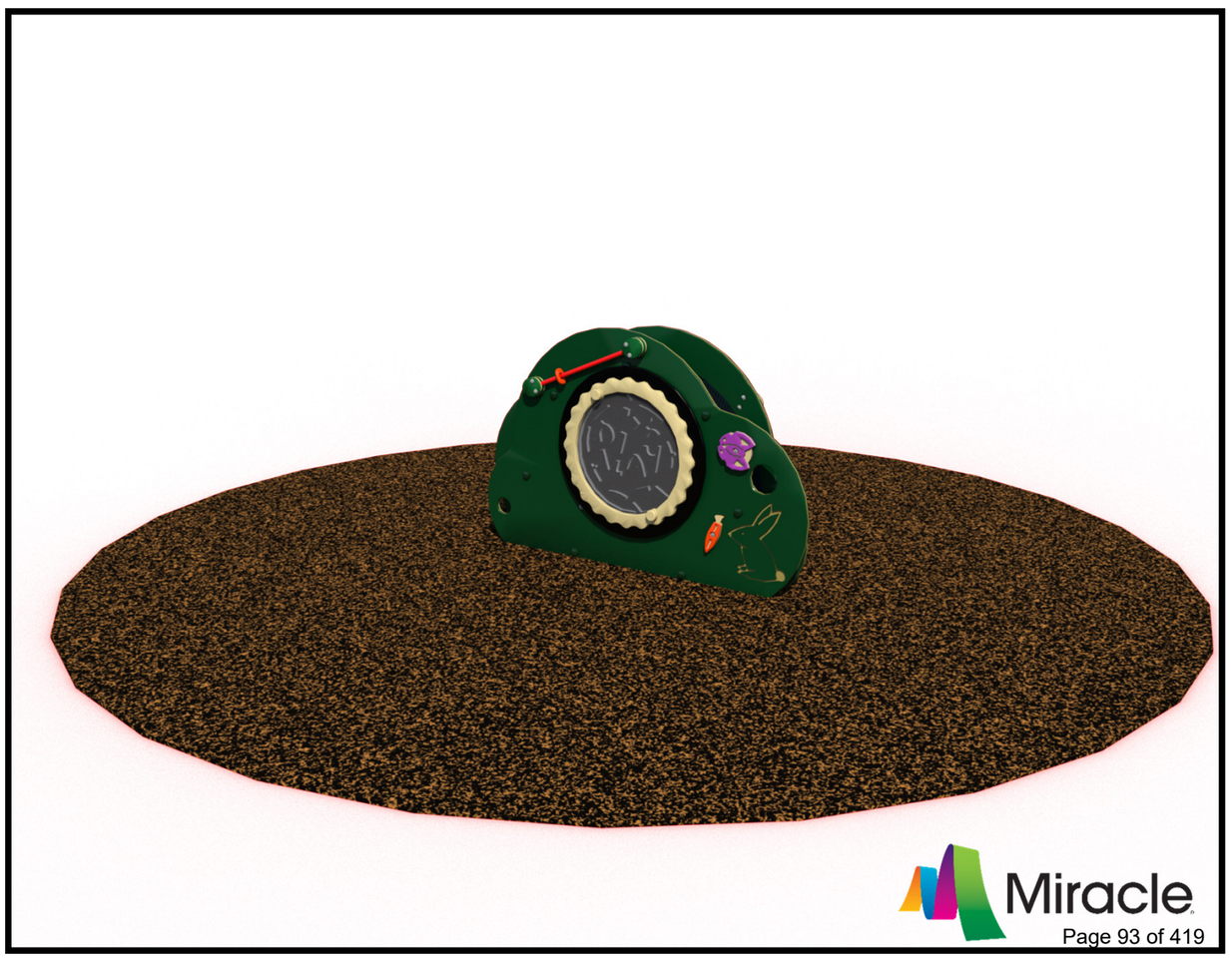

Mini City - Community Helper, Truck, Playhouse, Silly Tree, Garden Crawl Tunnel, Sensory Garden Wall (Double Sided), Traffic Light, Chattery

MR0880, MR0880BD
Mini City Community Helpers

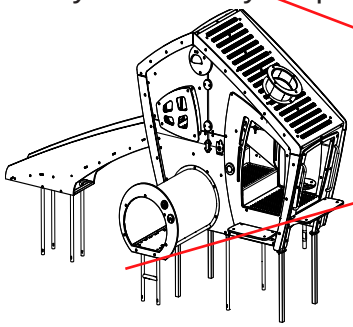

MR0881, MR0881BD
Mini City Truck

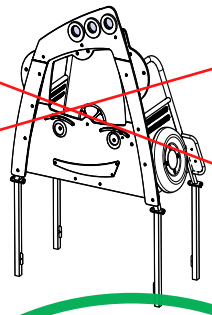

MR0882, MR0882BD
Mini City Playhouse

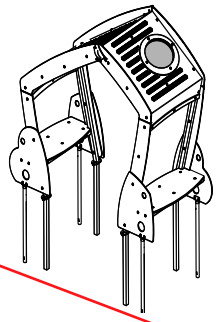

MR0883, MR0883BD
Mini City Garden Crawl

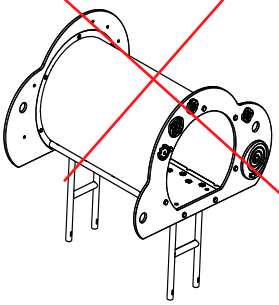

MR0884, MR0884BD
Mini City Sensory Garden
Wall Double Sided

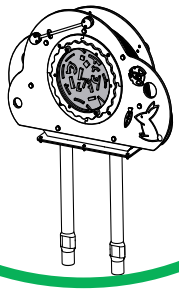

MR0885, MR0885BD
Mini City Silly Tree

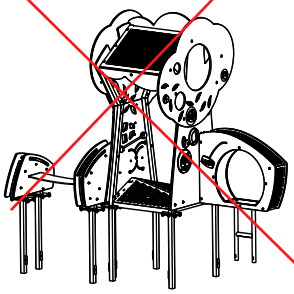

MR0886, MR0886BD
Mini City Traffic Light



MR0887, MR0887BD
Mini City Chattery

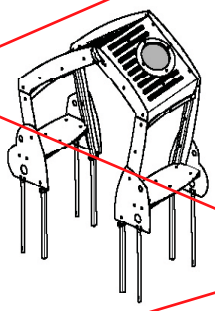

MR0888, MR0888BD
Mini City Sensory Garden
Wall Single Sided

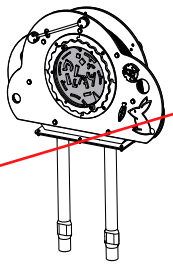

MR0889, MR0889BD
Mini City Community Helpers
w/o Crawl Tube

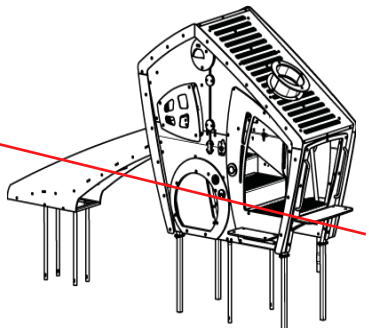

Consult Miracle's "Glossary of Technical Data for Materials, Processes and Finishes" for specifications of underlined items.

Mini City - Community Helper, Truck, Playhouse, Silly Tree, Garden Crawl Tunnel, Sensory Garden Wall (Double Sided), Traffic Light, Chattery

MODEL	PRODUCT	GROUND SPACE	CONCRETE
MR0880	Mini City Community Helpers (In-Ground)	29'-0" x 23'-0"	1.10 cu. yds.
MR0880BD	Mini City Community Helpers (Bolt Down)	29'-0" x 23'-0"	1.10 cu. yds.
MR0881	Mini City Truck (In-Ground)	NA	0.24 cu. yds.
MR0881BD	Mini City Truck (Bolt Down)	NA	0.24 cu. yds.
MR0882	Mini City Playhouse (In-Ground)	14'-0" x 17'-0"	0.48 cu. yds.
MR0882BD	Mini City Playhouse (Bolt Down)	14'-0" x 17'-0"	0.48 cu. yds.
MR0883	Mini City Garden Crawl (In-Ground)	17'-0' x 17'-0'	0.06 cu. yds.
MR0883BD	Mini City Garden Crawl (Bolt Down)	17'-0' x 17'-0'	0.06 cu. yds.
MR0884	Mini City Sensory Garden Wall Double Sided (In-Ground)	NA	0.12 cu. yds.
MR0884BD	Mini City Sensory Garden Wall Double Sided (Bolt Down)	NA	0.12 cu. yds.
MR0885	Mini City Silly Tree (In-Ground)	23'-0" x 18'-0"	NA
MR0885BD	Mini City Silly Tree (Bolt Down)	23'-0" x 18'-0"	NA
MR0886	Mini City Traffic Light (In-Ground)	NA	0.13 cu. yds.
MR0886BD	Mini City Traffic Light (Bolt Down)	NA	0.13 cu. yds.
MR0887	Mini City Chattery (In-Ground)	NA	0.48 cu. yds.
MR0887BD	Mini City Chattery (Bolt Down)	NA	0.48 cu. yds.
MR0888	Mini City Sensory Garden Wall Single Sided (In-Ground)	NA	0.12 cu. yds.
MR088BD	Mini City Sensory Garden Wall Single Sided (Bolt Down)	NA	0.12 cu. yds.
MR0889	Mini City Community Helpers w/o Crawl Tube (In-Ground)	29'-0" x 20'-0"	1.10 cu. yds.
MR0889BD	Mini City Community Helpers w/o Crawl Tube(Bolt Down)	29'-0" x 20'-0"	1.10 cu. yds.

DESCRIPTION

The Mini City Playhouses are designed to be enjoyed by children of all abilities, including autism, developmental delays and those that use mobility devices. Children can use their imagination, improve strength, agility and mobility.

MATERIALS

Steel Frame: Shall be constructed from 2" square tubing, 16-gage galvanized steel tubing, 1/4" steel plates.

Steel Frame: (Sensory Garden Wall, Traffic Light) Shall be constructed from 12-gage and 14-gage galvanized steel.

Steel Roof/End Walls: Shall be constructed from 12-gage galvanized steel plate.

Stairs: Shall be constructed from 12-gage steel coated with durable, thermoplastic coating.

Deck Platform: Shall be constructed from 12-gage steel coated with durable, thermoplastic coating.

Consult Miracle's "Glossary of Technical Data for Materials, Processes and Finishes" for specifications of underlined items.

Mini City - Community Helper, Truck, Playhouse, Silly Tree, Garden Crawl Tunnel, Sensory Garden Wall (Double Sided), Traffic Light, Chattery

MATERIALS cont.

Rope:	Shall be 16mm rope with aluminum connector.
Steel Crawl Tube:	Shall be constructed from 14-gage galvanized steel, 8-gage galvanized steel, 1-1/4" pipe, 13-gage galvanized steel tubing.
Steel Climber:	Shall be constructed from 1-1/2" pipe, 13-gage galvanized steel tubing, 8-gage and 1/4" steel plate.
Plastic Slide:	Shall be 1/2" HDPE bedway, 3/4" HDPE sides.
Plastic Steps/Seat:	Shall be 3/4" textured HDPE.
Plastic Walls/Ends/ Panels:	Shall be 3/4" HDPE.
Plastic Tire:	Shall be rotationally molded LLDPE.
Skylight: (Chattery)	Shall be 1/4" Koda XT.
Skylight: (Playhouse, Chattery)	Shall be 3/16" screen printed Lexan.
Castings:	Shall be 319 aluminum.
Finishes:	Finishes shall be in Mira-Cote.
Fasteners:	All fastening hardware shall be Fastener Style A.
Shelves:	Shall be constructed from 12-gage steel.
Graphic Panels:	Shall be 1/4" fiberglass signs.
Dog Door/Belt Bridge:	Shall be 3/8" Flextread.
Colored Lenses:	Shall be 1/8" acrylic colored panels with 3/16" Lexan covers.

Consult Miracle's "Glossary of Technical Data for Materials, Processes and Finishes" for specifications of underlined items.

Miracle Product Specifications

Activity Panel Inserts

ACTIVITY PANEL INSERTS

714-715-201
Hypnotize Insert

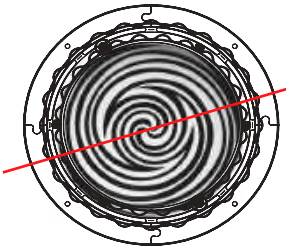

714-715-202
Funhouse Insert

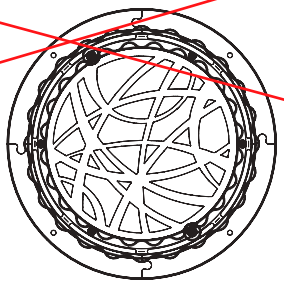

714-715-203
Very Buried Insert

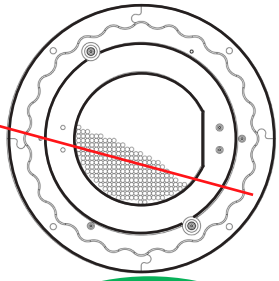

714-715-204
A-maze-ing Insert



714-715-205
Four-the-Win Insert

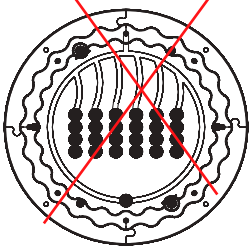

714-715-206
Magical Music Insert

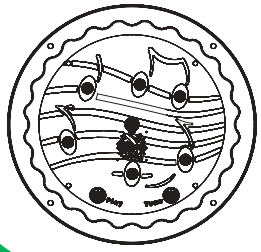

714-715-207
Slide & Solve Insert

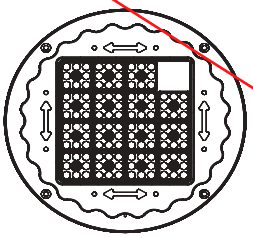

714-715-208
3-Digit RG Timer Insert

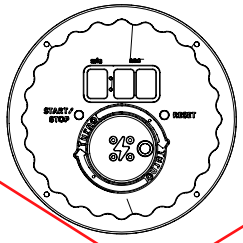

714-715-216
Solar Explorer Panel Insert
f/ KC/TC/TCX

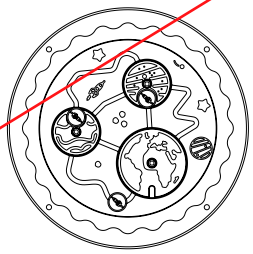

714-715-209
Cam Chimes Panel Insert
f/ KC/TC/TCX

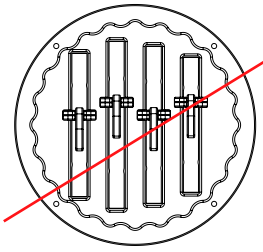

714-715-212
3 Bell Panel Insert
f/ KC/TC/TCX

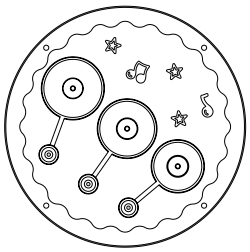

714-715-213
Bongo Panel Insert
f/ KC/TC/TCX

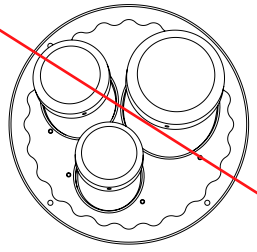

Consult Miracle's "Glossary of Technical Data for Materials, Processes & Finishes" for specifications of underlined items.

714-715-201, 714-715-202, 714-715-203, 714-715-204, 714-715-205, 714-715-206, 714-715-207, 714-715-208, 714-715-209, 714-715-211, 714-715-212, 714-715-213, 714-715-214, 714-715-215, 714-715-216

Activity Panel Inserts

714-715-214
Tongue Drum Panel Insert
f/ KC/TC/TCX

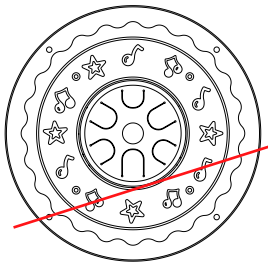

714-715-211
Make It Rain Panel Insert
f/ KC/TC/TCX

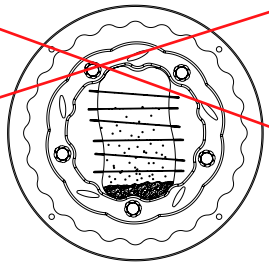

714-715-215
Tumble Cog Panel Insert
f/ KC/TC/TCX

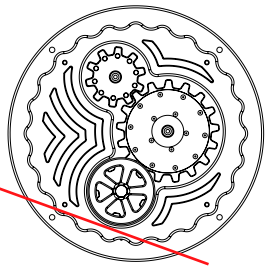

DESCRIPTION

These representational activity panel inserts are designed to enhance imagination and creative play.

MATERIALS

Insert Panel Options: Insert panel options shall be constructed from a combination of 1/2" thick high-density polyethylene, 3/4" thick high-density polyethylene, 3/16" thick polycarbonate, linear low-density polyethylene caps and stainless steel ball bearings.

MOUND / SLIDE / TUNNEL

ITEM NUMBER: TBD

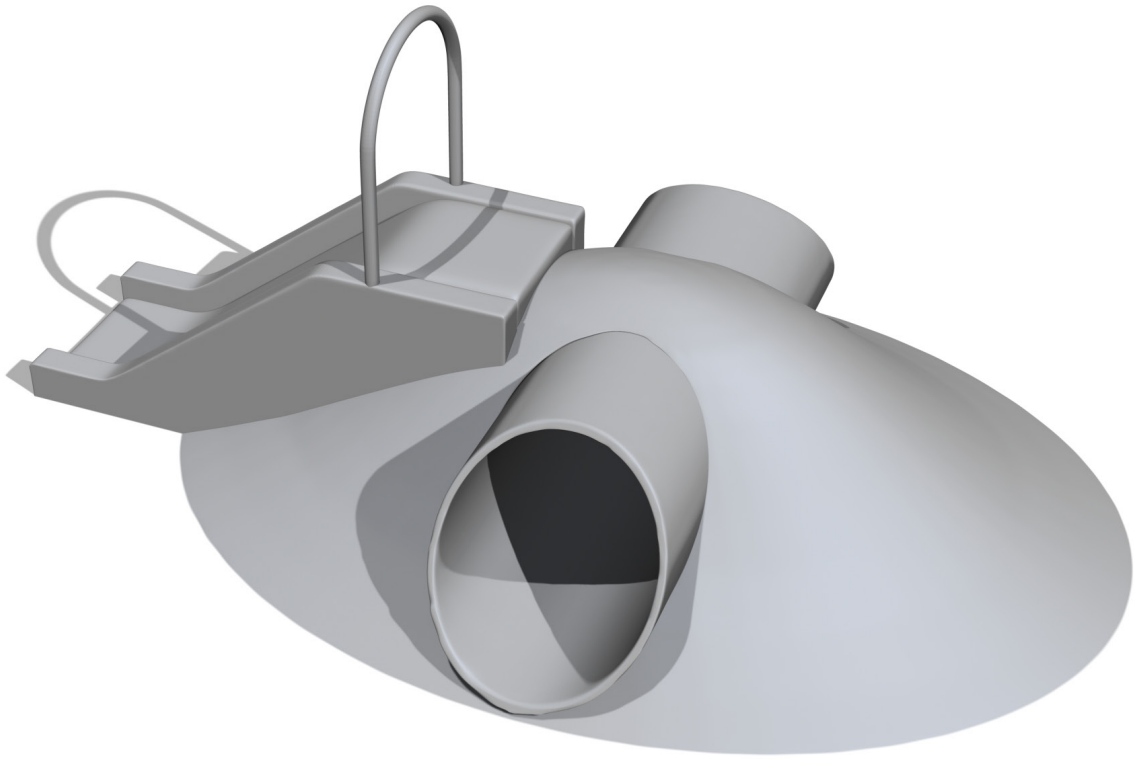

FEATURES

FUNCTIONALITY	CLIMBER / SLIDE / TUNNEL
PRODUCT LINE	MOUNDS
FINISH	UNDER PIP / MATTE

SPECIFICATIONS

SIZE	~139”L x 90”W x 61”H
WEIGHT	TBD
USE ZONE	72”

INSTALLATION REQUIREMENTS

MOUNTING	IN-GROUND FOOTER
BASE	PARK & REC
MARKET	OUTDOOR

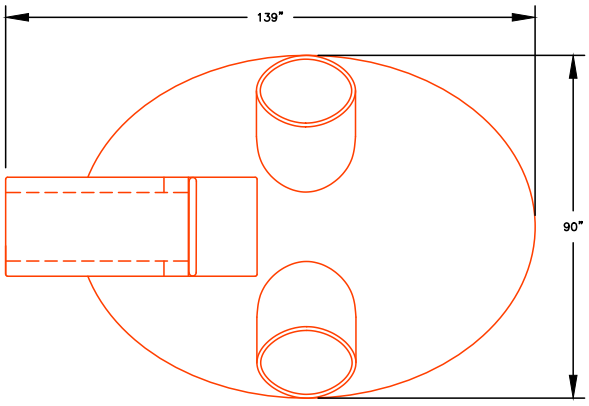

© 2024 PlayPower, Inc. All rights reserved.
Designs are the property of PlayPower and are not to be sold or distributed to any other party without expressed written consent. Prices, colors, and designs are subject to change at the discretion of PlayPower.
13310 James E. Casey Ave. • Englewood, CO 80112 USA • 303-662-0302 • softplay.com

FRAME & PANEL – SAND & DARK BROWN

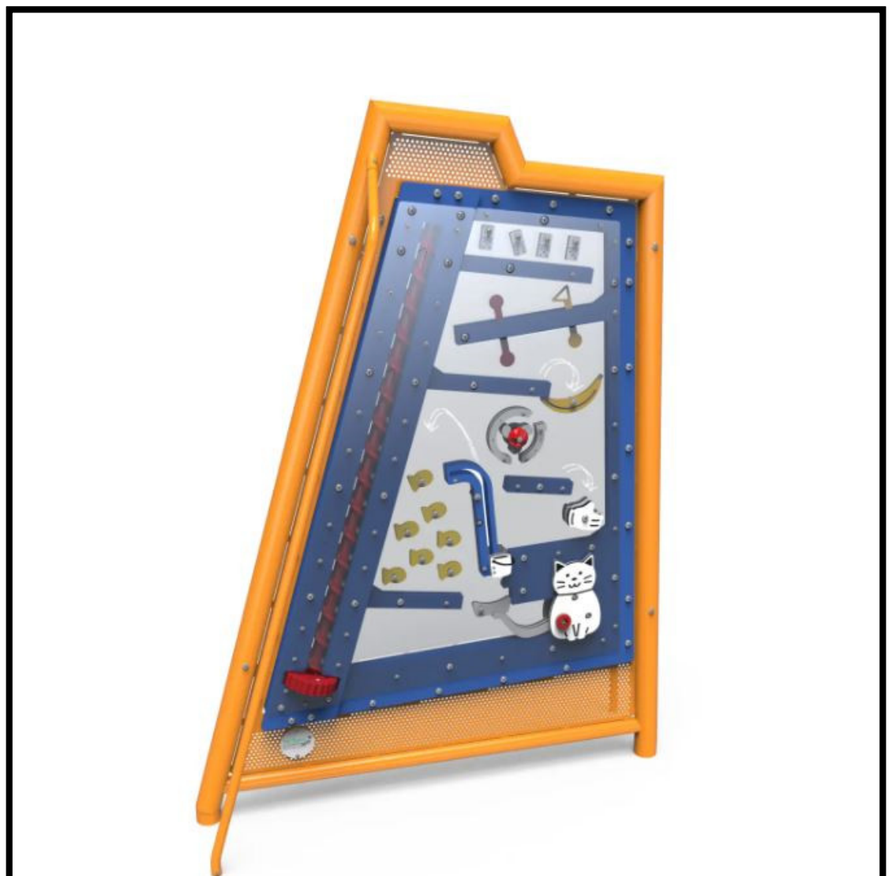

ACTUAL COLORS NOT SHOWN

Miracle Machines - Curiosity Thrilled the Cat, My Cup of Tea, GOOOAAALLL (inground and bolt down)

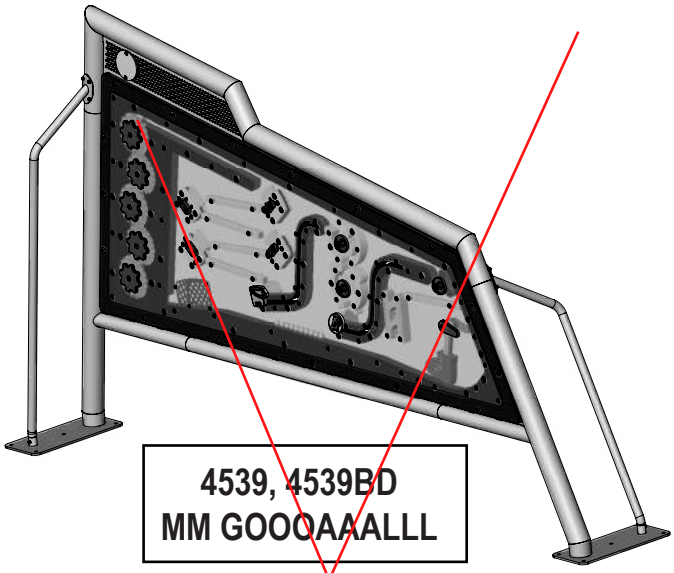

4539, 4539BD
MM GOOOAAALLL

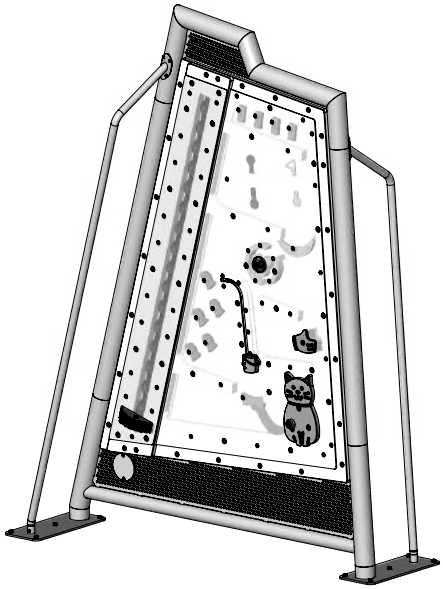

4536, 4536BD
MM Curiosity Thrilled the Cat

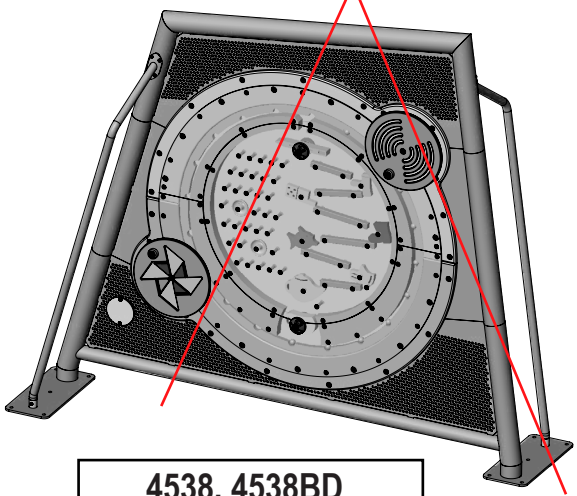

4538, 4538BD
MM My Cup of Tea

Model #	Product	Ground Space	Concrete
4536	MM Curiosity Thrilled the Cat (inground)	3' x 3'	0.35 cu.yds.
4536BD	MM Curiosity Thrilled the Cat BD (bolt down)	3' x 3'	N/A
4538	MM My Cup of Tea (inground)	8' x 3'	0.35 cu.yds.
4538BD	MM My Cup of Tea BD (bolt down)	8' x 3'	N/A
4539	MM GOOOAAALLL (inground)	11' x 3'	0.35 cu.yds.
4539BD	MM GOOOAAALLL BD (bolt down)	11' x 3'	N/A

Consult Miracle's "Glossary of Technical Data for Materials, Processes and Finishes" for specifications of underlined items.

Miracle Machines - Curiosity Thrilled the Cat, My Cup of Tea, GOOOAAALLL (inground and bolt down)

DESCRIPTION

The Miracle Machines play events are designed to be enjoyed by children of ages. They feature sensory-rich details with fun auditory feedback. Interactive gears and levers at a variety of heights and reach ranges provide children of varying abilities with a real play choice. The Miracle Machines play events may be freestanding, clustered or grouped with other Miracle Machines, and Miracle Museum play events.

MATERIALS

Frame Weldments	The frame weldments shall be constructed of tube 3.500 OD x 11 ga galvanized with sheet steel 3.0mm thick (11ga) galvanized welded to it. The supports shall be constructed of 1" pipe gator grip. Footings for bolt down version will be made from plate 7.9mm thick and welded to the main frame. For inground, the bolt on legs shall be constructed of 5" 11ga pipe with a 7.9mm plate welded to it.
Panel Activity	The structure shall be constructed from 3/4" sheet laminated HDPE, with a 1/8" sheet of polycarbonate on the outsides. The insides of the panel shall be constructed of 3/4" and 1/4" mira-lene routed panels, bronze bushings, 1” square galvanized pipe and stainless-steel balls.
Finishes	The frame shall have a Mira-Cote™ Finish.

Consult Miracle's "Glossary of Technical Data for Materials, Processes and Finishes" for specifications of underlined items.

ACCENTS – FOREST GREEN

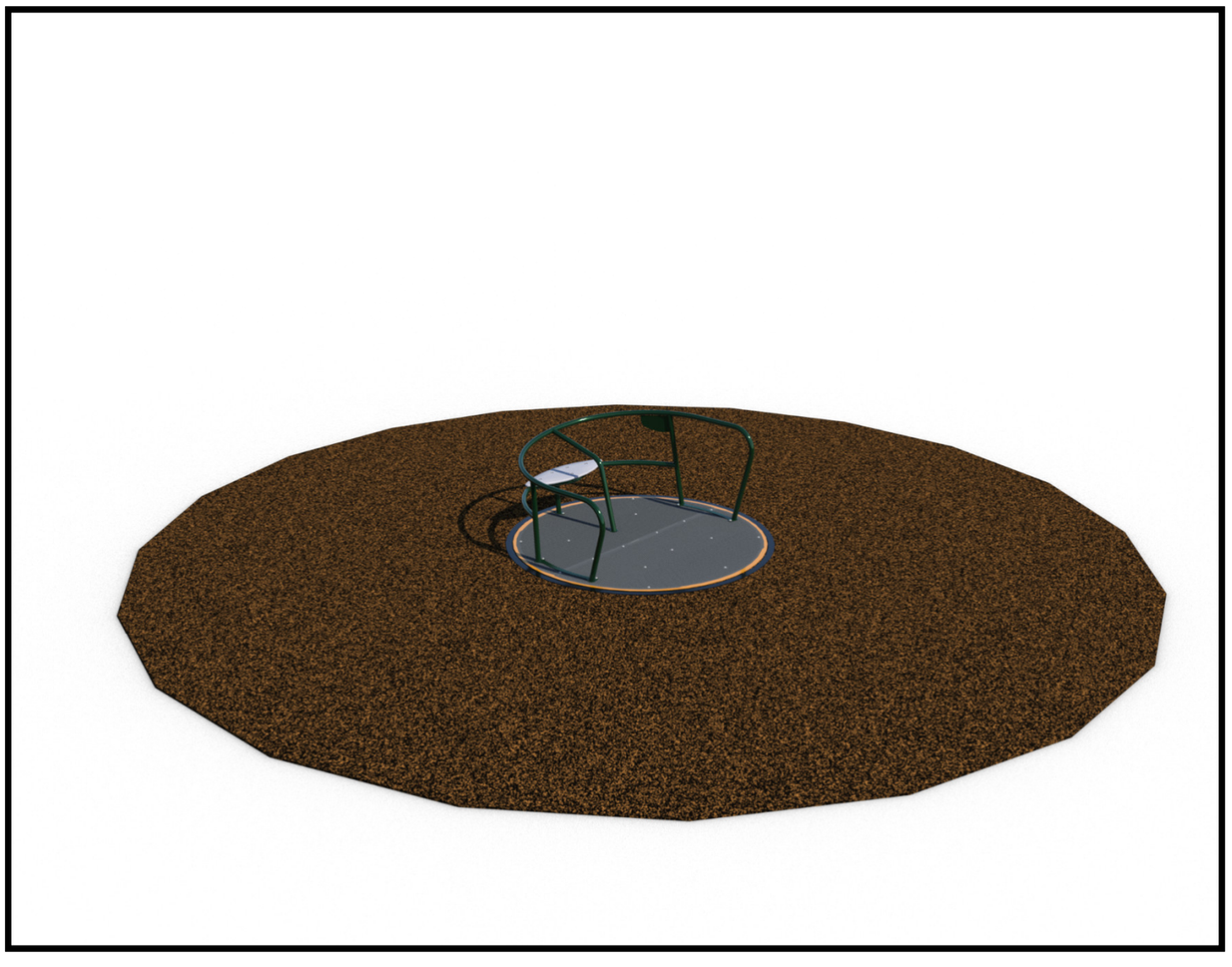

Inclusive Whirl

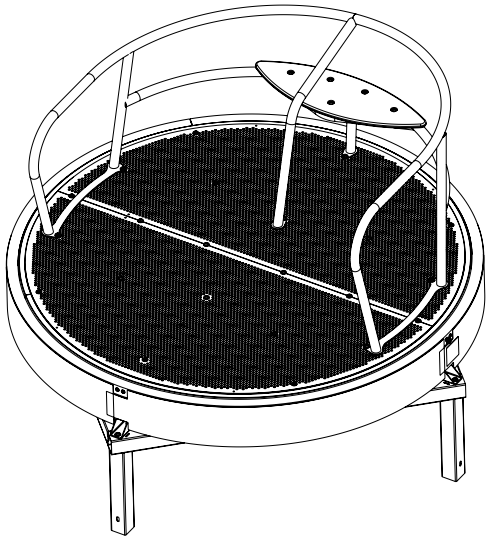

307, 307BD

Inclusive Whirl

MODEL	PRODUCT	GROUND SPACE	PROT. AREA	CONCRETE
307	Inclusive Whirl - In Ground	7' dia.	26' dia.	0.47 cu. yds.
307BD	Inclusive Whirl - Bolt Down	7' dia.	26' dia.	0.75 cu. yds.

DESCRIPTION

Inclusive Whirl is a classic style whirl designed for ADA accessibility, containing one ADA compliant parking space and a single seat for kids or caregivers. Inclusive Whirl decking is level with surrounding surfacing, allowing easy access via wheel chair.

MATERIALS

Rotating Base: Rotating base weldment is comprised of 2-3/8" x 1/8" thick square steel and 3/16" rolled angle steel. The rotating platform is supported by four, 100mm (4") diameter caster wheels for smooth operation.

Decking: Two (2) layer decking system designed to reduce surface temperature of the platform on installations in warmer climates. The lower layer is comprised of 14ga. solid sheet steel. The upper layer is comprised of 14 ga. perforated sheet steel.

Hand Rail: Hand rail weldment is constructed of 1.66 OD 13 ga. galvanized steel tube.

Seat: Seat is comprised of anti-slip 3/4" thick HDPE sheet plastic.

Hardware: All hardware is 18-8 stainless steel tamper resistant.

Footer Frame: In-ground footer frame weldment is comprised of 3" x 3" 11 ga. square steel tubing.

Finishes: Decking upper layer shall be finished in Mira-Therm. Rotating base, decking lower layer, hand rail, and footer frame shall be finished in Mira-Cote.

Consult Miracle's "Glossary of Technical Data for Materials, Processes and Finishes" for specifications of underlined items.

ACCENTS – FOREST GREEN

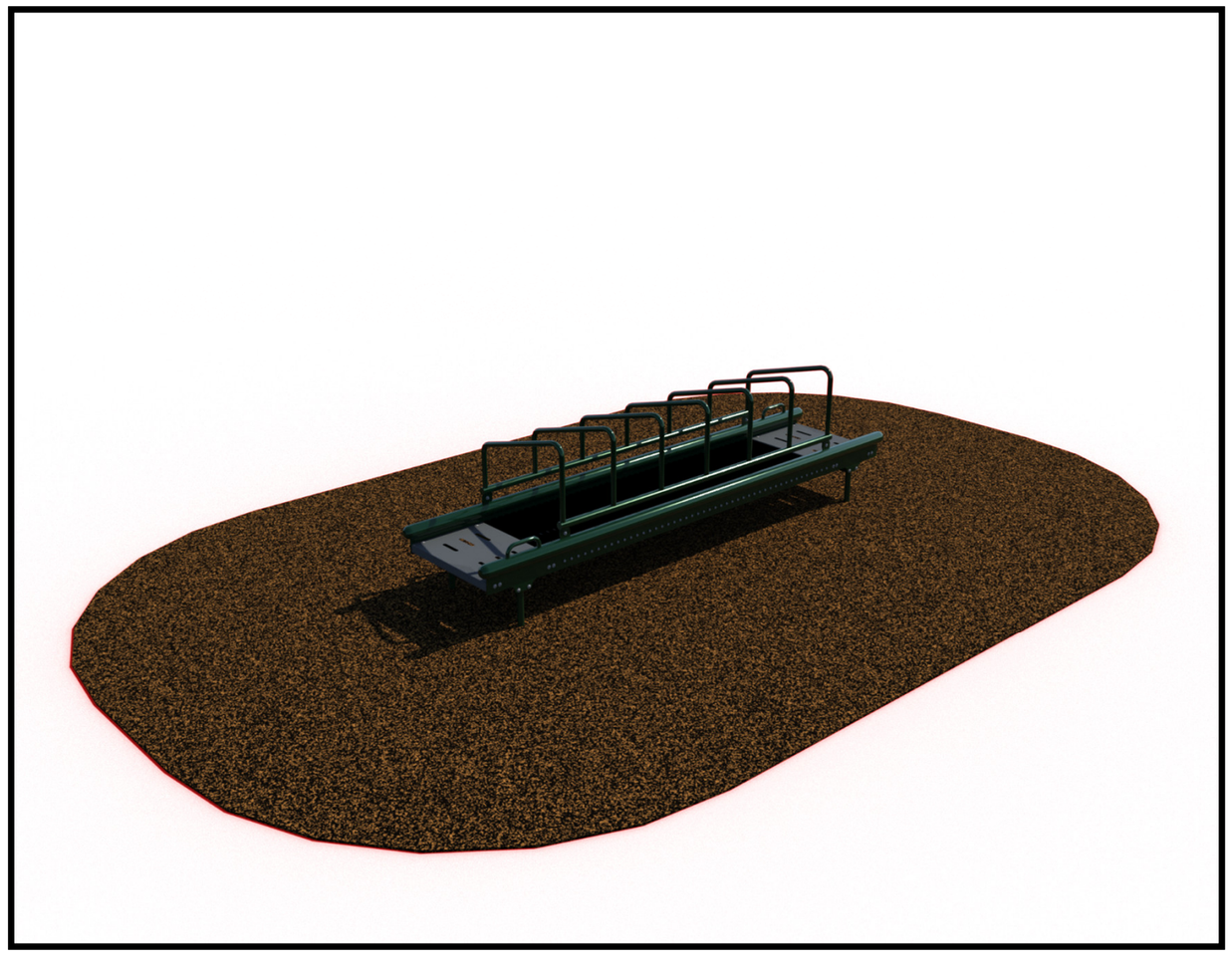

Product Specifications

Miracle Museum - SpinAtorium, Odyssey Hall, Dynamics Lab, Grand Gallery, Momentum Corridor, Tranquility Corner Frame (Inground and Bolt Down), Ground Level Panels (Falling Washer, Zoetrope, Push Pin)

453-1, 453-1BD
SpinAtorium



453-2, 453-2BD
Odyssey Hall

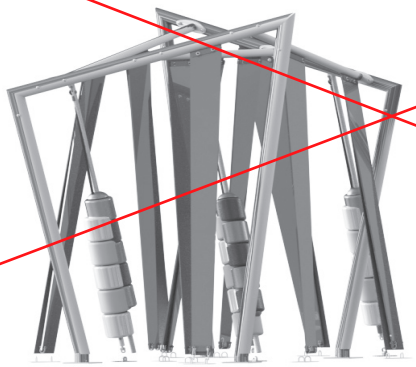

453-3, 453-3BD
Dynamics Lab

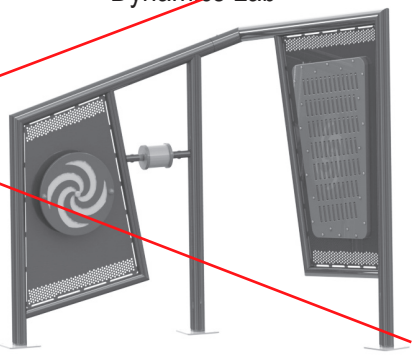

453-4, 453-4BD
Grand Gallery

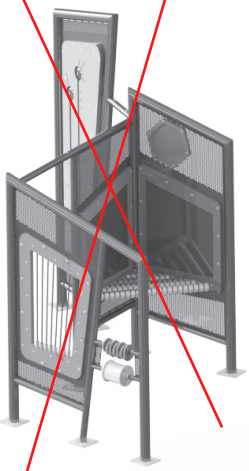

453-5, 453-5BD
Momentum Corridor

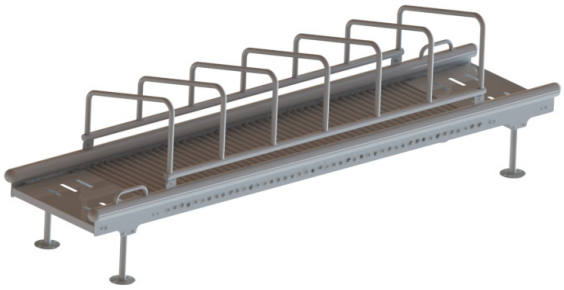

453-704, 453-704BD
Tranquility Corner Frame

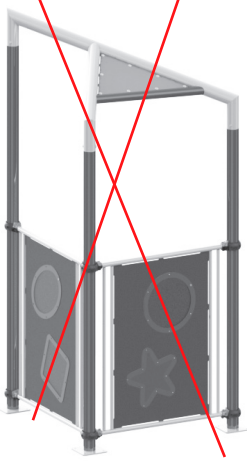

Consult Miracle's "Glossary of Technical Data for Materials, Processes and Finishes" for specifications of underlined items.

Miracle Museum

453-1, 453-1BD, 453-2, 453-2BD, 453-3, 453-3BD, 453-4, 453-4BD, 453-5, 453-5BD, 453-704, 453-704BD, 7146981, 7146982, 7146983, 7186981, 7186982, 7186983

Miracle Museum - SpinAtorium, Odyssey Hall, Dynamics Lab, Grand Gallery, Momentum Corridor, Tranquility Corner Frame (Inground and Bolt Down), Ground Level Panels (Falling Washer, Zoetrope, Push Pin)

7146981
Museum Washer Panel
KC - ground level

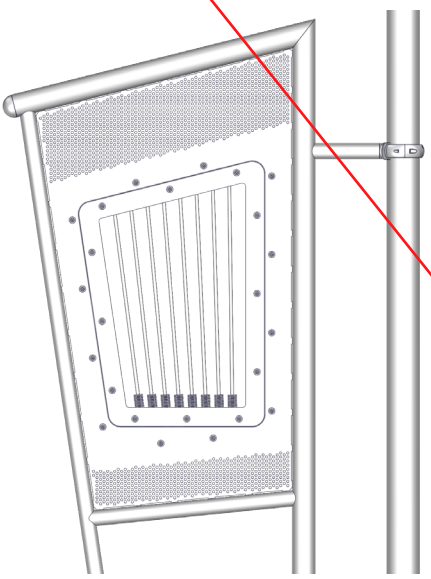

7146982
Museum Zoetrope Panel
KC - ground level

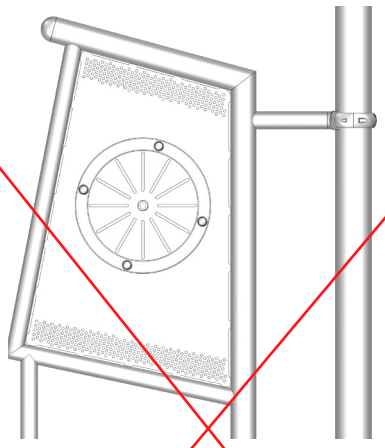

7146983
Museum Push Pin Panel
KC - ground level

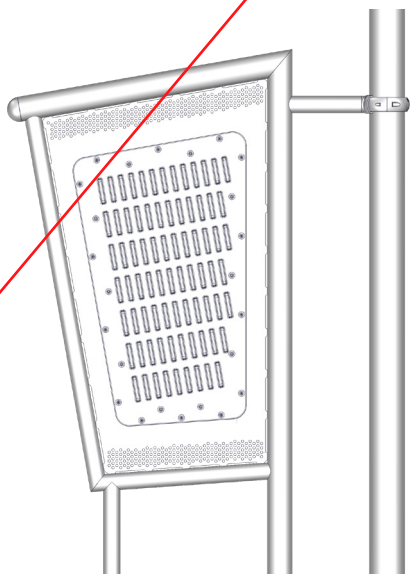

7186981
Museum Washer Panel
TC - ground level

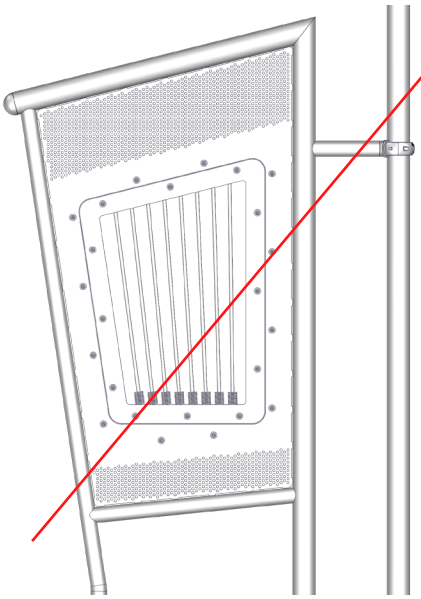

7186982
Museum Zoetrope Panel
TC - ground level

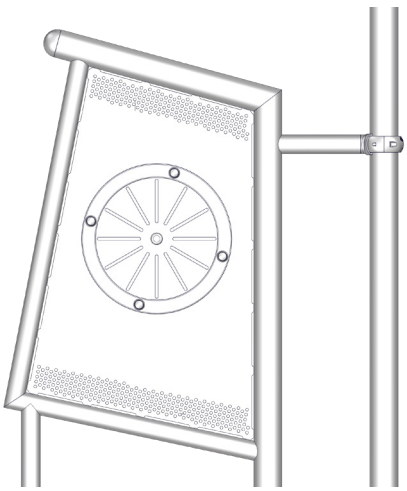

7186983
Museum Push Pin Panel
TC - ground level

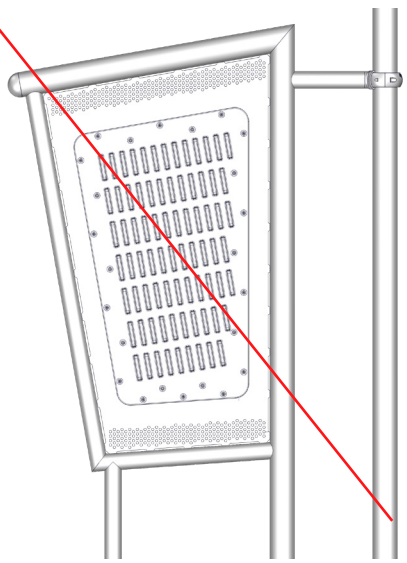

Miracle Museum - SpinAtorium, Odyssey Hall, Dynamics Lab, Grand Gallery, Momentum Corridor, Tranquility Corner Frame (Inground and Bolt Down), Ground Level Panels (Falling Washer, Zoetrope, Push Pin)

Model #	*Product*	*Ground Space*	*Concrete*
453-1	MM SpinAtorium (Inground)	N/A	0.13 cu.yds.
453-1BD	MM SpinAtorium (Bolt Down)	N/A	N/A
453-2	MM Odyssey Hall (Inground)	9' x 7'	2.40 cu.yds.
453-2BD	MM Odyssey Hall (Bolt Down)	9' x 7'	N/A
453-3	MM Dynamics Lab (Inground)	7' x 5'	0.39 cu.yds.
453-3BD	MM Dynamics Lab (Bolt Down)	7' x 5'	N/A
453-4	MM Grand Gallery (Inground)	10' x 10'	0.96 cu.yds.
453-4BD	MM Grand Gallery (Bolt Down)	10' x 10'	N/A
453-5	MM Momentum Corridor (Inground)	3' x 12'	0.48 cu.yds.
453-5BD	MM Momentum Corridor (Bolt Down)	3' x 12'	N/A
453-704	MM Tranquility Corner Frame	5' x 5'	0.50 cu.yds.
453-704BD	MM Tranquility Corner Frame Bolt Down	5' x 5'	N/A
714-698-1	Museum Washer Panel KC-Ground Level	1' x 6'	0.24 cu. yds.
718-698-1	Museum Washer Panel TC-Ground Level	1' x 6'	0.24 cu. yds.
714-698-2	Museum Zeotrope Panel KC-Ground Level	1' x 5'	0.24 cu. yds.
718-698-2	Museum Zeotrope Panel TC-Ground Level	1' x 5'	0.24 cu. yds.
714-698-3	Museum Push Pin Panel KC-Ground Level	1' x 5'	0.24 cu. yds.
718-698-3	Museum Push Pin Panel TC-Ground Level	1' x 5'	0.24 cu. yds.

Miracle Museum

Miracle Museum - SpinAtorium, Odyssey Hall, Dynamics Lab, Grand Gallery, Momentum Corridor, Tranquility Corner Frame (Inground and Bolt Down), Ground Level Panels (Falling Washer, Zoetrope, Push Pin)

DESCRIPTION

The Miracle Museum playevents are designed to be enjoyed by children of all abilities, including autism, developmental delays and those that use mobility devices. Children can use their imagination and enhance creative play. The Miracle Museum playevents may be freestanding, clustered or grouped with other Miracle Museum playevents.

MATERIALS

Spinner Assembly:	Shall be constructed from 3/4" and 1/2" Mira-lene routed panels, bronze bearing and polymer and stainless steel balls inside the spinner and covered by a transparent polycarbonate bubble.
Post Weldment:	Shall be made from 3/5" x 11ga. galvanized steel tubing, 7 ga. galvanized steel sheet and 3/8" steel plate.
Odyssey Hall Frame Weldments:	Shall be constructed of tube 3.500 OD x 11 ga. galvanized with tabs and blocks made from SHST GAL 3.0mm (11ga.) and 5/8" mild steel block hanger.
Cross Members:	Shall be constructed from tube 2.375 OD x 12 ga. galvanized with tabs and blocks made from SHST GAL 3.0mm (11 ga.) and 5/8" mild steel block hanger.
Spinners:	Shall be made from rotational molded plastic and 9.5mm (.38") grey textured styrene butadiene rubber (SBR).
Ropes:	Shall be steel reinforced nylon braided rope with a galvanized foundation steelwork.
Chains:	Shall be 4/O straight link coil chain.
Odyssey Hall Finish:	The frame shall have a MICA-Cote™ finish.
Dynamics Lab Frame Weldments:	Shall be constructed of tube 3.500 OD x 11 ga. galvanized, tube 2.375 OD x 16 ga. galvanized and SHST GAL 3.0mm (11 ga.). Footings for bolt down version will be made from plate 9.5mm (3/8") A36 and welded to the main frame.
Gear Spinner:	Shall be constructed from 1/2" Mira-lene routed gears separated by spacers constructed from 1/4" Mira-lene. Gears and spacers are to be assembled onto a M10 threaded rod.
Ground Level Panel Weldments:	Shall be constructed of tube 3.500” OD x 11 ga. galvanized tube, 2.375” OD x 10 ga. galvanized, tube 2.375” OD x 12 ga. galvanized tube and 3.0mm (11 ga.) galvanized sheet.

Consult Miracle's "Glossary of Technical Data for Materials, Processes and Finishes" for specifications of underlined items.

453-1, 453-1BD, 453-2, 453-2BD, 453-3, 453-3BD, 453-4, 453-4BD, 453-5, 453-5BD, 453-704, 453-704BD, 7146981, 7146982, 7146983, 7186981, 7186982, 7186983

Miracle Museum - SpinAtorium, Odyssey Hall, Dynamics Lab, Grand Gallery, Momentum Corridor, Tranquility Corner Frame (Inground and Bolt Down), Ground Level Panels (Falling Washer, Zoetrope, Push Pin)

Mounting Weldments:	Shall be constructed of RDTB ILG 42.2 x 3.0, SHST GAL 3.0mm (11ga.) and tube 1.315 OD x 11 ga. galvanized and used to mount the drum. The weldment for the spinner events shall be constructed of SHST HR 4.5mm (7 ga.) and 1215 steel.
Router Events:	Shall be constructed from 3/4" sheet laminated HDPE or 1/2" sheet HDPE.
Dynamics Lab Finish:	The frame shall have a MICA-Cote™ finish.
Grand Gallery Frame:	Shall be constructed of 3 1/2" OD x 11 ga. galvanized tube, 2 3/8" OD x 12 ga. galvanized tube, 1 5/8" x 11 ga. galvanized tube and 3.0mm galvanized sheet. Footings for bolt down version shall be constructed of 3/8" A36 plate, welded.
Activities:	Shall be constructed from 1/2" laminated high-density polyethylene, 3/4" laminated high-density polyethylene, 1/4" translucent colored polycarbonate, cast alloyed aluminum bells, golf balls, mirrored finish stainless steel, polystyrene high impact static cylinders in red and blue and 1/2" stainless steel acme threaded rod.
Momentum Corridor Slide:	Slide sides shall be constructed of 4.6mm galvanized sheet, 3 1/2" x 13 ga. galvanized tube and 25.4 x 14 ga. tube. Slide decks shall be constructed of 2.3mm galvanized sheet. Rollers shall be constructed of 2" aluminum tubing with nitrile bearings on stainless steel shafts.
Roof:	Slide roof shall be constructed of 4.6mm galvanized sheet, 3.0mm galvanized sheet, 1 7/8" x 11 ga. tube and 1 5/16" x 14 ga. tube.
Support:	Slide support shall be constructed of 1 5/8" x 11 ga. galvanized tube and 4.6mm galvanized sheet.
Tranquility Corner Top Weldment:	Top weldment shall be made from: corner cross member 1, tube rnd 3.500 11ga. glv; corner cross member 2, tube rnd 3.500 11ga. glv; corner cross member 3, tube rnd 2.375 12ga. glv; corner bolt panel 1, 2 and 3, sheet 11ga. galv (3.0mm).
Triangle Roof (KODA):	Shall be constructed of KODA XT 1/4".
Corner Leg 1 and 2:	Shall be constructed of tube rnd 3.500 11ga. glv.
All Models Fasteners:	All hardware shall be Fastener Style A.
Finishes (unless otherwise stated):	The frame assembly and Versalok Fasteners shall have a Mira-Cote™ finish.
Versalok Fasteners:	All Versalok Fasteners for component attachment shall be aluminum alloy.

Consult Miracle's "Glossary of Technical Data for Materials, Processes and Finishes" for specifications of underlined items.

FRAME & PANEL – SAND & DARK BROWN



ACTUAL COLORS NOT SHOWN

Miracle Machines - Curiosity Thrilled the Cat, My Cup of Tea, GOOOAAALLL (inground and bolt down)

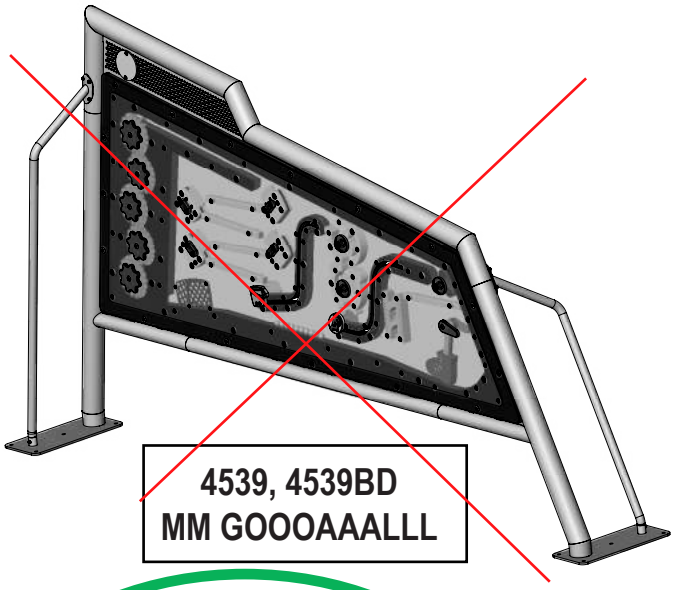

4539, 4539BD
MM GOOOAAALLL

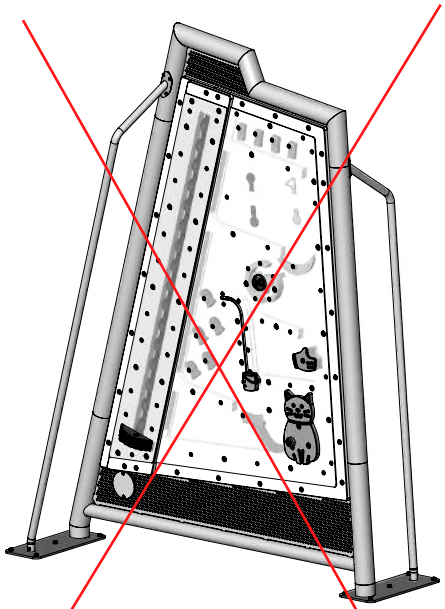

4536, 4536BD
MM Curiosity Thrilled the Cat

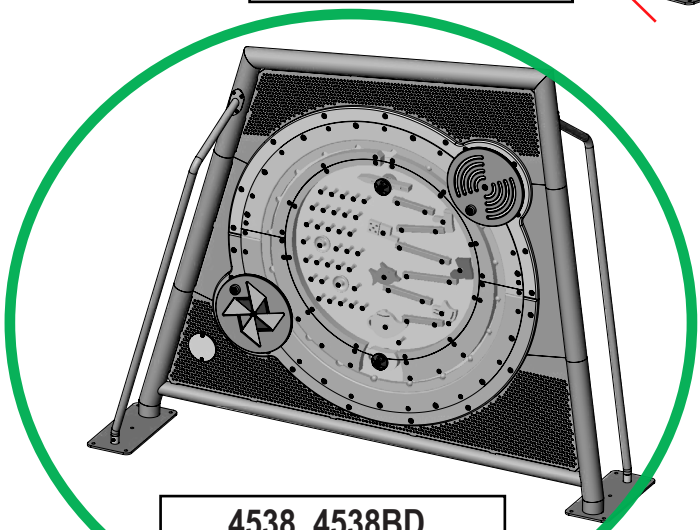

4538, 4538BD
MM My Cup of Tea

Model #	*Product*	*Ground Space*	*Concrete*
4536	MM Curiosity Thrilled the Cat (inground)	3' x 3'	0.35 cu.yds.
4536BD	MM Curiosity Thrilled the Cat BD (bolt down)	3' x 3'	N/A
4538	MM My Cup of Tea (inground)	8' x 3'	0.35 cu.yds.
4538BD	MM My Cup of Tea BD (bolt down)	8' x 3'	N/A
4539	MM GOOOAAALLL (inground)	11' x 3'	0.35 cu.yds.
4539BD	MM GOOOAAALLL BD (bolt down)	11' x 3'	N/A

Consult Miracle's "Glossary of Technical Data for Materials, Processes and Finishes" for specifications of underlined items.

Miracle Machines - Curiosity Thrilled the Cat, My Cup of Tea, GOOOAAALLL (inground and bolt down)

DESCRIPTION

The Miracle Machines play events are designed to be enjoyed by children of ages. They feature sensory-rich details with fun auditory feedback. Interactive gears and levers at a variety of heights and reach ranges provide children of varying abilities with a real play choice. The Miracle Machines play events may be freestanding, clustered or grouped with other Miracle Machines, and Miracle Museum play events.

MATERIALS

Frame Weldments	The frame weldments shall be constructed of tube 3.500 OD x 11 ga galvanized with sheet steel 3.0mm thick (11ga) galvanized welded to it. The supports shall be constructed of 1" pipe gator grip. Footings for bolt down version will be made from plate 7.9mm thick and welded to the main frame. For inground, the bolt on legs shall be constructed of 5" 11ga pipe with a 7.9mm plate welded to it.
Panel Activity	The structure shall be constructed from 3/4" sheet laminated HDPE, with a 1/8" sheet of polycarbonate on the outsides. The insides of the panel shall be constructed of 3/4" and 1/4" mira-lene routed panels, bronze bushings, 1” square galvanized pipe and stainless-steel balls.
Finishes	The frame shall have a Mira-Cote™ Finish.

Consult Miracle's "Glossary of Technical Data for Materials, Processes and Finishes" for specifications of underlined items.

SWING LEG – DARK BROWN

SWING TOP RAIL – SAND

BELT SEATS - BLACK

TOT SEATS - BLACK

PLASTIC – FOREST GREEN

SWING ROPE - BLACK



Arch Swing Frames 3.5" (inground and bolt down)

2 Seat, 2 Seat Add-A-Bay, 1 Seat, 1 Seat Add-A-Bay

MR0930 & MR0930BD
3.5" 2 Seat Arch Swing



Inground Model Shown

MR0932 & MR0932BD
3.5" 2 Seat Arch Swing Add-A-Bay



Inground Model Shown

MR0934 & MR0934BD
3.5" 1 Seat Arch Swing

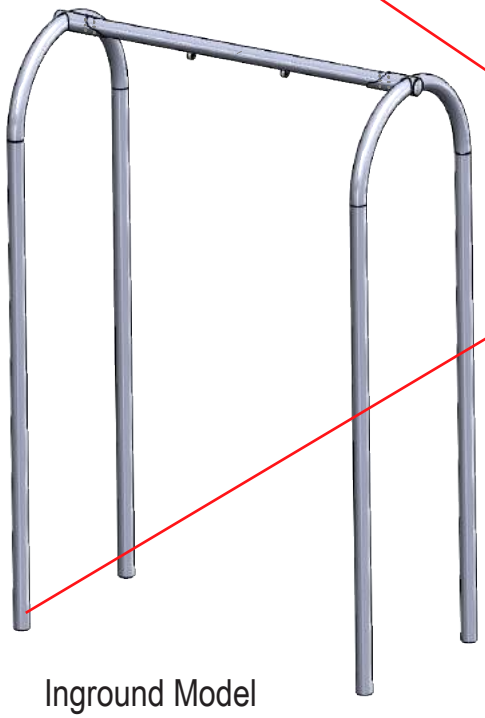

Inground Model Shown

MR0936 & MR0936BD
3.5" 1 Seat Arch Swing Add-A-Bay

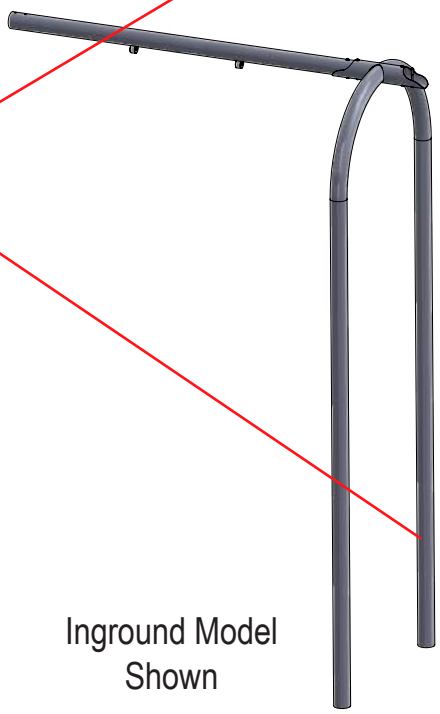

Inground Model Shown

Arch Swing Frames 3.5" (inground and bolt down)

2 Seat, 2 Seat Add-A-Bay, 1 Seat, 1 Seat Add-A-Bay

Model #	*Product*	*Protective Area*	*Concrete*
MR0930	3.5" 2 Seat Arch Swing	24' x 32'	0.5 cu.yds.
MR0930BD	3.5" 2 Seat Arch Swing - BD	24' x 32'	0.5 cu.yds.
MR0932	3.5" 2 Seat Arch Swing Add-A-Bay	24' x 32'	0.5 cu.yds.
MR0932BD	3.5" 2 Seat Arch Swing Add-A-Bay - BD	24' x 32'	0.5 cu.yds.
MR0934	3.5" 1 Seat Arch Swing	21' x 32'	0.25 cu.yds.
MR0934BD	3.5" 1 Seat Arch Swing - BD	21' x 32'	0.25 cu.yds.
MR0936	3.5" 1 Seat Arch Swing Add-A-Bay	21' x 32'	0.25 cu.yds.
MR0936BD	3.5" 1 Seat Arch Swing Add-A-Bay - BD	21' x 32'	0.25 cu.yds.

DESCRIPTION

All models consist of arch weldments and header weldments which assemble to form a swing frame. Swings must be ordered separately.

MATERIALS

Arches:	Arch weldments shall consist of the arch and stub(s). Arches shall be constructed of 3-1/2" tube, 11-gauge. Stubs shall be constructed of 4" tube, 7-gauge. The stub(s) shall be solid welded to the arches.
Header:	The header weldment shall consist of the header and bushing housings. The header shall be constructed of 3-½" tube, 8-gauge. The header shall have bushing housings welded to it with oil-impregnated bushings installed after painting.
Clevises:	The clevises shall be cast of ductile iron grade 60-40-18.
Fasteners:	All fastening hardware shall be Fastener Style A.
Finishes:	The arches and header shall be finished in Mira-Cote. The clevises shall be zinc plated.

Consult Miracle's "Glossary of Technical Data for Materials, Processes & Finishes" for specifications of underlined items.

Arch Basket Swings 3.5" (inground and bolt down)

1 Seat, 1 Seat Add-A-Bay

MR0938 & MR0938BD
3.5" Multi-User Arch Swing

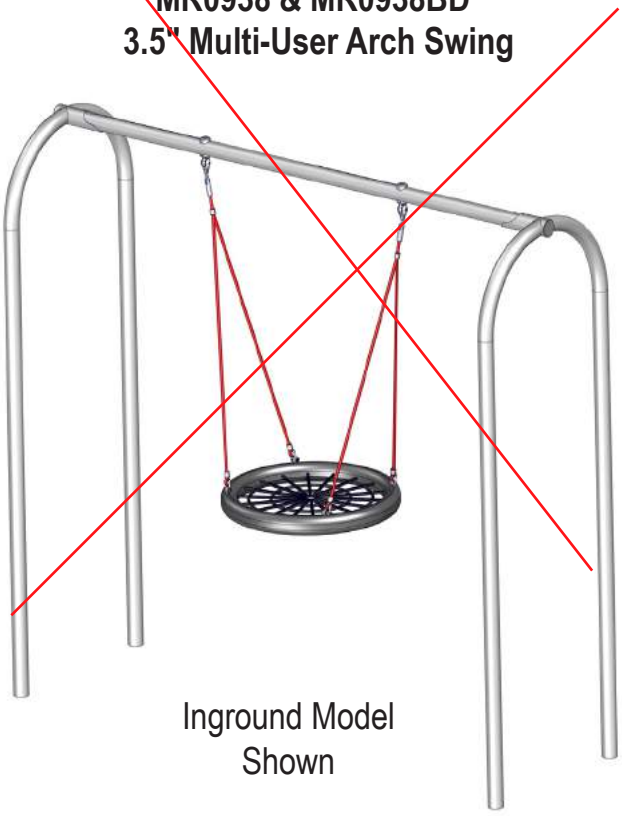

Inground Model Shown

MR0940 & MR0940BD
3.5" Multi-User Arch Swing Add-A-Bay

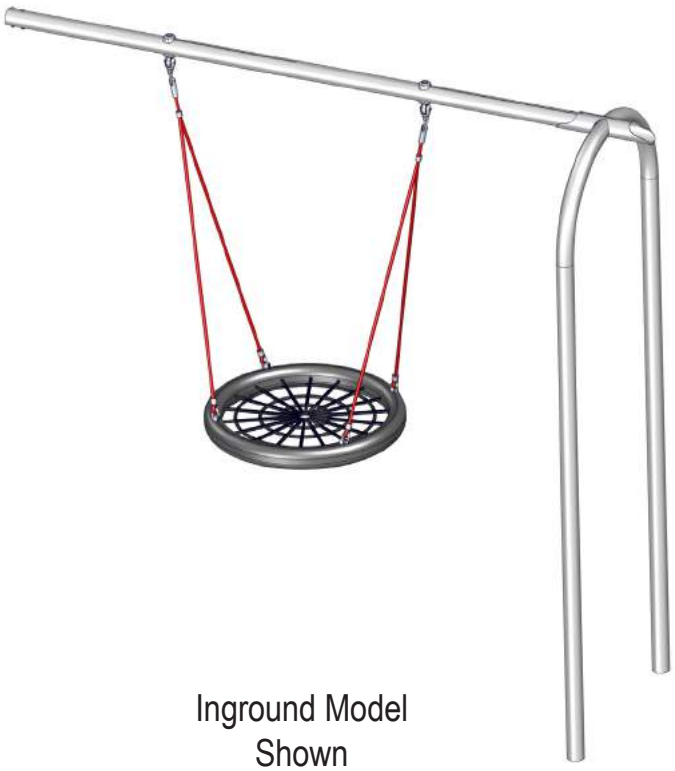

Inground Model Shown

Arch Basket Swings 3.5" (inground and bolt down)

1 Seat, 1 Seat Add-A-Bay

Model #	*Product*	*Protective Area*	*Concrete*
MR0938	3.5" Multi-User Arch Swing	24’ x 32’	0.5 cu.yds.
MR0938BD	3.5" Multi-User Arch Swing - BD	24’ x 32’	N/A
MR0940	3.5" Multi-User Arch Swing Add-A-Bay	24’ x 32’	0.5 cu.yds.
MR0940BD	3.5" Multi-User Arch Swing Add-A-Bay BD	24’ x 32’	N/A

DESCRIPTION

All models consist of arch weldments and headers which assemble to form a swing frame. Basket swing included.

MATERIALS

Arches:	Arch weldments shall consist of the arch and stub(s). Arches shall be constructed of 3-1/2” tube, 11-gauge. Stubs shall be constructed of 4" tube, 7-gauge. The stub(s) shall be solid welded to the arches.
Header:	The header shall be constructed of 3-½" tube, 8-gauge.
Rope:	Ropes shall be constructed of 16mm diameter, steel reinforced nylon braided rope with a galvanized foundation steelwork.
Mounting Hardware:	Mounting hardware shall be stainless steel.
Chain:	Chain shall be 5/0 straight link coil chain.
Fasteners:	All hardware shall be Fastener Style A.
Finishes:	The arches and header shall be finished in Mira-Cote.

Consult Miracle's "Glossary of Technical Data for Materials, Processes & Finishes" for specifications of underlined items.

Swing Seats

284, 2840 and 2841
Slashproof Seat



299 and 2990
360° Tot Seat

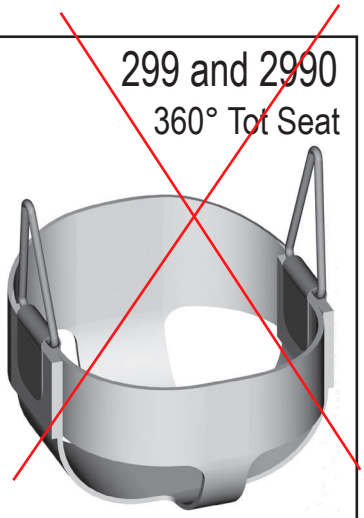

Note: Chains NOT shown.

2740 and 2741
Inclusive Swing Seat

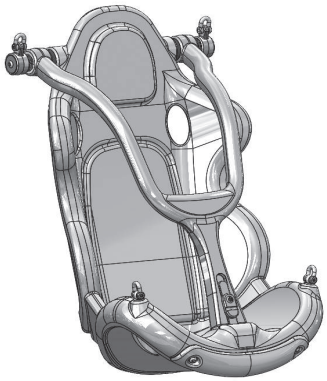

2760
Generation Swing Seat



Note: Chains NOT shown.

Swing Seats

DESCRIPTION:

The Slashproof Seat is a flexible flat single strap seat with end attachment points and has an exterior surface of EPDM rubber. The 360 Degree Slashproof Tot Seat is a flexible seat fabricated into a configuration of a wide strap through the bottom, a wide strap running completely around at the top, and two (2) interconnecting straps at the front and the rear of the seat for complete enclosure of the small user. The exterior surface is EPDM rubber. The Inclusive Swing Seats are Rockite seats molded to form a chair. Models with chain each have two chains to suspend the swing from a swing frame header. The Generation Swings are Rockite seats molded to form a double sided swing, one side a tot swing design and the other for an adult. Models with chain each have two chains to suspend the swing from a swing frame header.

MATERIALS:

Slashproof Seat: The Slashproof Seat is constructed of a 4" wide inner steel insert of type 301 stainless spring steel, 0.020" thick. The slashproof seat is 26" long (excluding mounting triangles) x 5" wide x 5/8" thick at the front and rear leading cushion edges. The rubber molded to the steel core is 70 durometer EPDM. At each end a 16 ga. galvanized steel clip 3" wide is attached by three stainless steel rivets through the clip and seat subassembly. A 3/8" diameter galvanized steel mounting triangle is encompassed by the steel clip at each end of the seat.

360 Degree Tot Seat: The 360 Degree Tot Seat is constructed of a one piece die cut 0.020" thick, martinsitic spring steel insert with 70 durometer EPDM rubber, 1/4" thick, molded to the insert. The main seat strap is 5" wide, the back strap is 4" wide, and the front strap is 2" wide. The two (2) places where the straps are interconnected and form the suspension points for the seat are held by a clip and grommet system. The clip is 4" wide 16 ga. galvanized steel. There are two grommets per clip, each of which is 3/4" O.D. by 14 ga. wall galvanized steel tubing, flared to securely attach the clip to the seat. The two (2) mounting triangles are secured to the seat by clips and are made from 3/8" steel round stock, formed and galvanized.

Inclusive Swing Seat: The Inclusive Swing Seat shall be constructed of Rockite. Attached to the seat is a reinforced polyurethane rubber bumper. The sliding latch mechanism is constructed from 6061 machined aluminum.

Generation Swing Seat: The Generation Swing shall be constructed of Rockite.

Chain: Each chain assembly is 4/0 straight link coil chain.

"D" Shackle: The "D" Shackle for all models except the Inclusive Swing Seat and Generation Swing Seat are sand cast of ductile iron grade 60-40-18.

Finishes: All rubber surfaces are EPDM. The Rockite Inclusive Swing Seat have molded-in color. All exposed metal surfaces are bright zinc plated. The clevises are zinc plated.

POST – DARK BROWN

ACCENTS – SAND

PVC BENCH – BROWN



PLASTIC POST TOPPERS – FOREST GREEN, DARK BROWN, SAND



SENSORY PLASTIC – ORANGE, GREEN

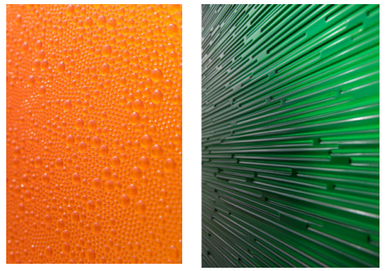



Kids' Choice®

Steel Posts (5" O.D., 11 ga. Round Tube) & Aluminum Posts

Steel Posts - 5" O.D., 11ga.

MODEL	DESCRIPTION	USES	PART NUMBER
714-545-3	144" Deck Post (Cheer Roof)	3' Deck	997292*
714-545-5	168" Deck Post (Cheer Roof)	5' Deck	997294*
714-545-6	186" Deck Post (Cheer Roof)	6'-6" Deck	908813*
714-545-8	204" Deck Post (Cheer Roof)	8' Deck	997297*
714-545-10	228" Deck Post (Cheer Roof)	10" Deck	908812*
714-549-1	88" Maze Post	Sensory Panel	925341*
714-549-3	112" Deck Post	3' Decks	995228*
714-549-4	124" Deck Post	4' Decks	995229*
714-550-3	206" Deck Post (PlayCover)	3' Deck & less	997215*
714-550-5	219" Deck Post (PlayCover)	3'-6" to 5' Decks	997218*
714-550-6	243" Deck Post (PlayCover)	5'-6" to 6'-6" Decks	997203*
714-550-8	258" Deck Post (PlayCover)	7' to 8' Decks	997315*
714-551	106" Deck Post	2'-6" Decks & less	713551*
714-552	136" Deck Post	3' to 5' Decks	713552*
714-552L	136" Deck Post w/CPSIA Label	3' to 5' Decks	996061*
714-553	160" Deck Post	5'-6" to 6'-6" Decks	713553*
714-554	178" Deck Post	7' to 8' Decks	713554*
714-556	196" Deck Post	10' Deck	985244*
714-571	106" Post (Roof)	Ground Level	713561*
714-571L	106" Post (Roof) w/CPSIA Label	Ground Level	996352*

Note: An (*) by a part number indicate: Color Code Required.

Consult Miracle's "Glossary of Technical Data for Materials, Processes and Finishes" for specifications of underlined items.

714-545-3, 714-545-5, 714-545-6, 714-545-8, 714-545-10, 714-549-1, 714-549-3, 714-549-32, 714-549-4, 714-549-42, 714-550-3, 714-550-5, 714-550-6, 714-550-8, 714-551, 714-551-2, 714-552, 714-552L, 714-552-2, 714-552-2L, 714-553, 714-553-2, 714-554, 714-554-2, 714-556, 714-571, 714-571-2, 714-571L, 714-572, 714-572-2, 714-573, 714-573-2, 714-574, 714-574-2, 714-575, 714-576, 714-576-8, 714-576-10

Kids' Choice®

Steel Posts (5" O.D., 11 ga. Round Tube) & Aluminum Posts

Steel Posts - 5" O.D., 11ga. cont.

MODEL	DESCRIPTION	USES	PART NUMBER
714-572	144" Deck Post (Roof)	3' Decks & less	713572*
714-573	168" Deck Post (Roof)	3'-6" to 5' Decks	713573*
714-574	186" Deck Post (Roof)	5'-6" to 6'-6" Decks	713574*
714-575	196" Deck Post (Uses 2 for Flippo Roof)	6'-6" Deck	985260*
714-576	204" Deck Post (Roof)	8' Deck	713818*
714-576-8	228" Deck Post (Topper)	8' Deck	994097*
714-576-10	252" Deck Post (Topper)	10' Deck	994407*

Aluminum Posts - 5" O.D.

MODEL	DESCRIPTION	USES	PART NUMBER
714-549-32	112" Deck Post	3' Decks	995230*
714-549-42	124" Deck Post	4' Decks	995231*
714-551-2	106" Deck Post	2'-6" Decks & less	713593*
714-552-2	136" Deck Post	5' Decks	713594*
714-552-2L	136" Deck Post w/CPSIA Label	5' Decks	996065*
714-553-2	160" Deck Post	5'-6" to 6'-6" Decks	713595*
714-554-2	178" Deck Post	7' to 8' Decks	713599*
714-571-2	106" Post (Roof)	Ground Level	713588*
714-572-2	144" Deck Post (Roof)	3' Decks & less	713589*
714-573-2	168" Deck Post (Roof)	3'-6" to 5' Decks	713590*
714-574-2	186" Deck Post (Roof)	5'-6" to 6'-6" Decks	713591*

Consult Miracle's "Glossary of Technical Data for Materials, Processes and Finishes" for specifications of underlined items.

714-545-3, 714-545-5, 714-545-6, 714-545-8, 714-545-10, 714-549-1, 714-549-3, 714-549-32, 714-549-4, 714-549-42, 714-550-3, 714-550-5, 714-550-6, 714-550-8, 714-551, 714-551-2, 714-552, 714-552L, 714-552-2, 714-552-2L, 714-553, 714-553-2, 714-554, 714-554-2, 714-556, 714-571, 714-571-2, 714-571L, 714-572, 714-572-2, 714-573, 714-573-2, 714-574, 714-574-2, 714-575, 714-576, 714-576-8, 714-576-10

Kids' Choice®

Steel Posts (5" O.D., 11 ga. Round Tube) & Aluminum Posts

CONCRETE 0.13 cubic yards required per post
0.26 cubic yards per post for model's 714-550-3, 714-550-5, 714-550-6 and 714-550-8.

DESCRIPTION Posts are used for support of deck systems and freestanding components.

MATERIALS

Steel Post Assembly: Steel posts shall be constructed of 5" tube, 11 ga. Posts not designed for roof assemblies shall have 5" round end caps pressed in at the factory.

Aluminum Post Assembly: Aluminum posts shall be constructed of 5" aluminum tube. Posts not designed for roof assemblies shall have 5" round end caps pressed in at the factory.

Fasteners: Components shall be field assembled to Posts by means of Versalok Fasteners, Fastener Style A hardware and/or Fastener Style B hardware.

Finishes: Post assemblies and clamps shall be finished in Mira-Cote.

Consult Miracle's "Glossary of Technical Data for Materials, Processes and Finishes" for specifications of underlined items.

714-545-3, 714-545-5, 714-545-6, 714-545-8, 714-545-10, 714-549-1, 714-549-3, 714-549-32, 714-549-4, 714-549-42, 714-550-3, 714-550-5, 714-550-6, 714-550-8, 714-551, 714-551-2, 714-552, 714-552L, 714-552-2, 714-552-2L, 714-553, 714-553-2, 714-554, 714-554-2, 714-556, 714-571, 714-571-2, 714-571L, 714-572, 714-572-2, 714-573, 714-573-2, 714-574, 714-574-2, 714-575, 714-576, 714-576-8, 714-576-10

Kids' Choice®

Wall Enclosures - Below Deck or Freestanding

714-816B
Wall Enclosure Below Deck

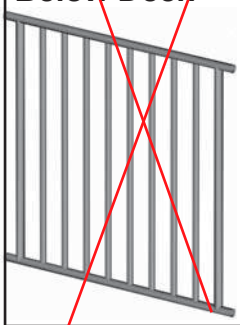

714-817B
Wall Enclosure w/Seat Below Deck



714-900B
Wall Enclosure w/Steering Wheel Below Deck



MODEL	PRODUCT	PROT. AREA	GRND. SPACE	CONCRETE
714-816B	Wall Enclosure Below Deck	NA	NA	NA
714-817B	Wall Enclosure w/Seat Below Deck	NA	NA	NA
714-900B	Wall Enclosure w/Steering Wheel Below Deck	NA	NA	NA

DESCRIPTION

These Wall Enclosures are designed for below deck or freestanding installation. Model 714-817B features a PVC-dipped steel seat. Model 714-900B features a plastic steering wheel designed to enhance imaginative play.

MATERIALS

Wall Enclosure/ Wall Enslosure w/ Steering Wheel: The wall enclosures shall consist of a top and bottom rail and end uprights of 1" pipe with spoked infill of 3/4" x 1" oval tube, all solid welded.

Steering Wheel Mounting Bracket: The steering wheel mounting bracket shall be 7 ga. G-90 Galvanized sheet welded to the wall enclosure.

Steering Wheel: The steering wheel shall be constructed of a high density polyethylene produced from high performance, U.V. stabilized rotational molding grade resins with a comprehensive additive package. These resins shall be tested in accordance with ASTM testing procedures D-1505, D-1248, D-1693(b), D-638, D-790, and D-746. Resin's properties shall exhibit a balance of toughness, rigidity, environmental stress crack resistance, and excellent low temperature impact performance. Wall thickness shall be 1/8". The steering wheel hub cover shall be constructed of injection molded polypropylene which contains U.V. light stabilizers.

Consult Miracle's "Glossary of Technical Data for Materials, Processes and Finishes" for specifications of underlined items.

Kids' Choice®

Wall Enclosures - Below Deck or Freestanding

MATERIALS cont.

Wall Enclosure w/ Seat:	The wall enclosure with seat shall comprise a top and bottom rail and end uprights constructed of 1" pipe and spoked infill of 3/4" x 1" oval tube and a seat assembly, all solid welded. The seat assembly shall comprise a frame of 1" pipe with bolting brackets of sheet 7 ga. black HR CQ and a factory-assembled 19" wide seat constructed of 11 ga. sheet, perforated with a staggered pattern of 3/8" diameter holes at 5/8" apart center-to-center. The seat shall be approximately 14" from the deck surface.
Fasteners:	The assembly shall contain Versalok Fasteners and Fastener Style A hardware.
Finishes:	The wall enclosures and clamps shall have a Mira-Cote finish. The seat shall have a Mira-Therm finish. The steering wheel shall have color molded in.

Consult Miracle's "Glossary of Technical Data for Materials, Processes and Finishes" for specifications of underlined items.

Kids' Choice®

Wave Topper

714-680-4T
Square Wave Topper



714-680-6T
Hex Wave Topper

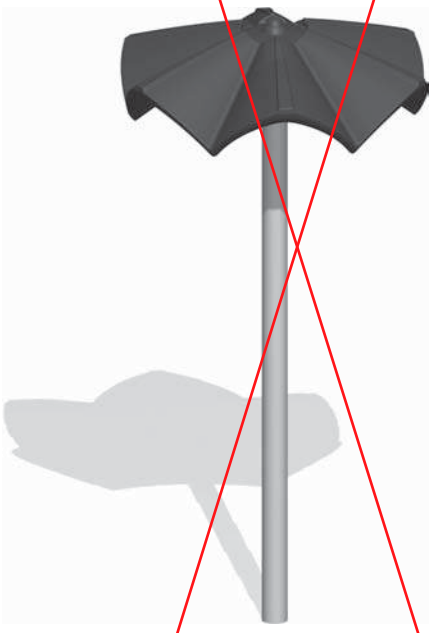

DESCRIPTION

Wave Toppers shall act as an attractive roof to provide shade to your system.

MATERIALS

Post Topper	Post topper shall be constructed of Rockite®.
Fasteners:	The assembly shall contain Versalok Fasteners and Fastener Style A hardware.

Kids' Choice®

Sensory Panels - Below Deck

714-713-11B

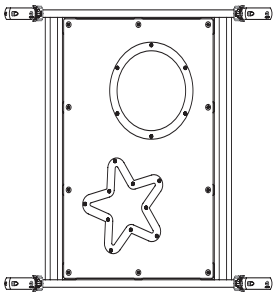

714-713-12B

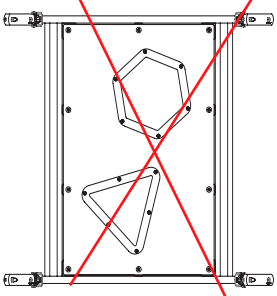

714-713-13B

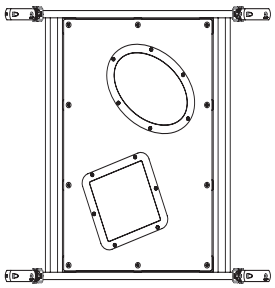

714-713-14B

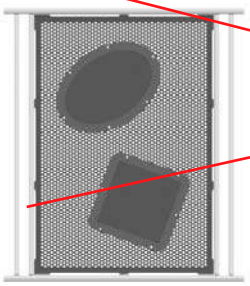

714-713-15B

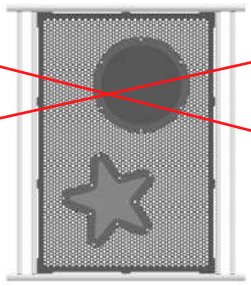

714-713-16B

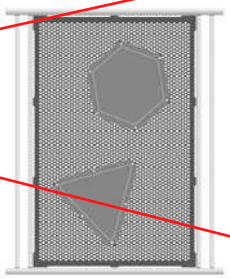

Models included:

MODEL	DESCRIPTION
714-713-11B	Sensory Panel Textured Star Circle
714-713-12B	Sensory Panel Textured Triangle Hexagon
714-713-13B	Sensory Panel Textured Square Oval
714-713-14B	KC Below Deck Oval/Square Perf. Panel
714-713-15B	KC Below Deck Star/Circle Perf. Panel
714-713-16B	KC Below Deck Hex/Triangle Perf. Panel

DESCRIPTION

These representational sensory panels, designed to enhance imagination and creative play, may be free-standing, clustered or below deck.

Consult Miracle's "Glossary of Technical Data for Materials, Processes & Finishes" for specifications of underlined items.

Sensory Panels

Kids' Choice®

Sensory Panels - Below Deck

MATERIALS

Panels:	The panel shall consist of a border plastic, plastic shape inserts and shape flanges all joined by double sided rivets.
Rivets:	The rivets shall be aluminum.
Border Plastic:	The border plastic shall be constructed of translucent colored polycarbonate.
Insert Plastic:	The insert plastic shall be constructed of translucent, colored and textured plastic.
Shape Flanges:	The shape flanges shall be constructed of 11ga. sheet steel flange
Frame:	The frame shall be constructed of Gator Grip, 1" round tube and a 13ga. sheet steel flange all solid welded.
Perforated Panels:	The perforated panel shall be constructed of 11ga. galvanized sheet.
Fasteners:	Each assembly shall contain Versalok Fasteners and Fastener Style A hardware.
Finishes:	The frame and shape frames shall have a Mira-Cote finish.

Consult Miracle's "Glossary of Technical Data for Materials, Processes & Finishes" for specifications of underlined items.

714-713-11B, 714-713-12B, 714-713-13B, 714-713-14B, 714-713-15B, 714-713-16B

ACCENTS – GREEN

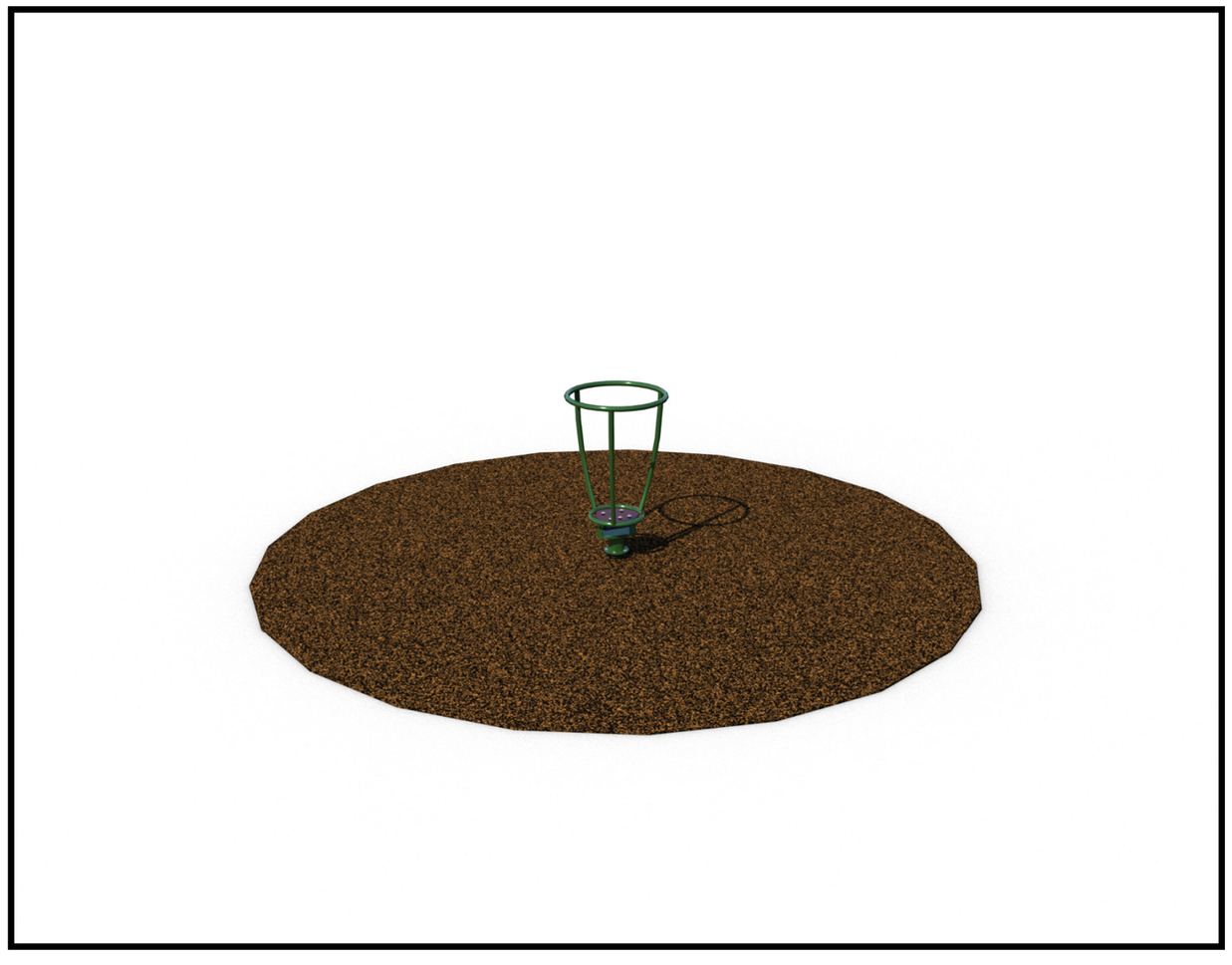

Barrel Ride



947
Barrel Ride

MODEL	PRODUCT	GROUND SPACE	PROTECTIVE AREA	CONCRETE:
947	Barrel Ride	3' DIA	17' DIA.	0.14 cu. yds.

DESCRIPTION
Inventive motion component is designed to provide a spinning, rocking action.

MATERIALS

Inground Leg Support Weldment:	Shall be fabricated from 5.000" OD x 7ga. galvanized tubing, Ø3.13" carbon steel and 3/8" plate.
Upper Assembly Weldment:	Shall be fabricated from 1.315" OD x 14ga. galvanized tubing, 1.315" OD x 11ga. galvanized tubing, 7ga. galvanized sheet and 3/8" black sheet.
Standoff Weldment:	Shall be fabricated from 3/8" black sheet.
Hub Weldment:	Shall be fabricated from Ø5.50" carbon steel and 3/8" black steel and shall be zinc plated.
Plate:	Shall be fabricated from 13ga. HRPO sheet and shall be PVC coated.
Spring Assembly:	Shall be fabricated from cast iron, steel tubing, elastic inserts and shall be coated with blue enamel.
Axel Bar:	Shall be fabricated from 1.57" x 1.67" bar and shall be zinc plated.
Shaft Cap:	Shall be fabricated from 7ga. galvanized sheet.
Hardware:	Shall be Fastener Style A hardware.
Finish:	Shall be finished in Mira-Cote®.

Consult the Glossary of Technical Data for Materials, Processes and Finishes of the underlined items.

POST – GALVANIZED

ACCENT – VIBRANT GREEN*
not available to change

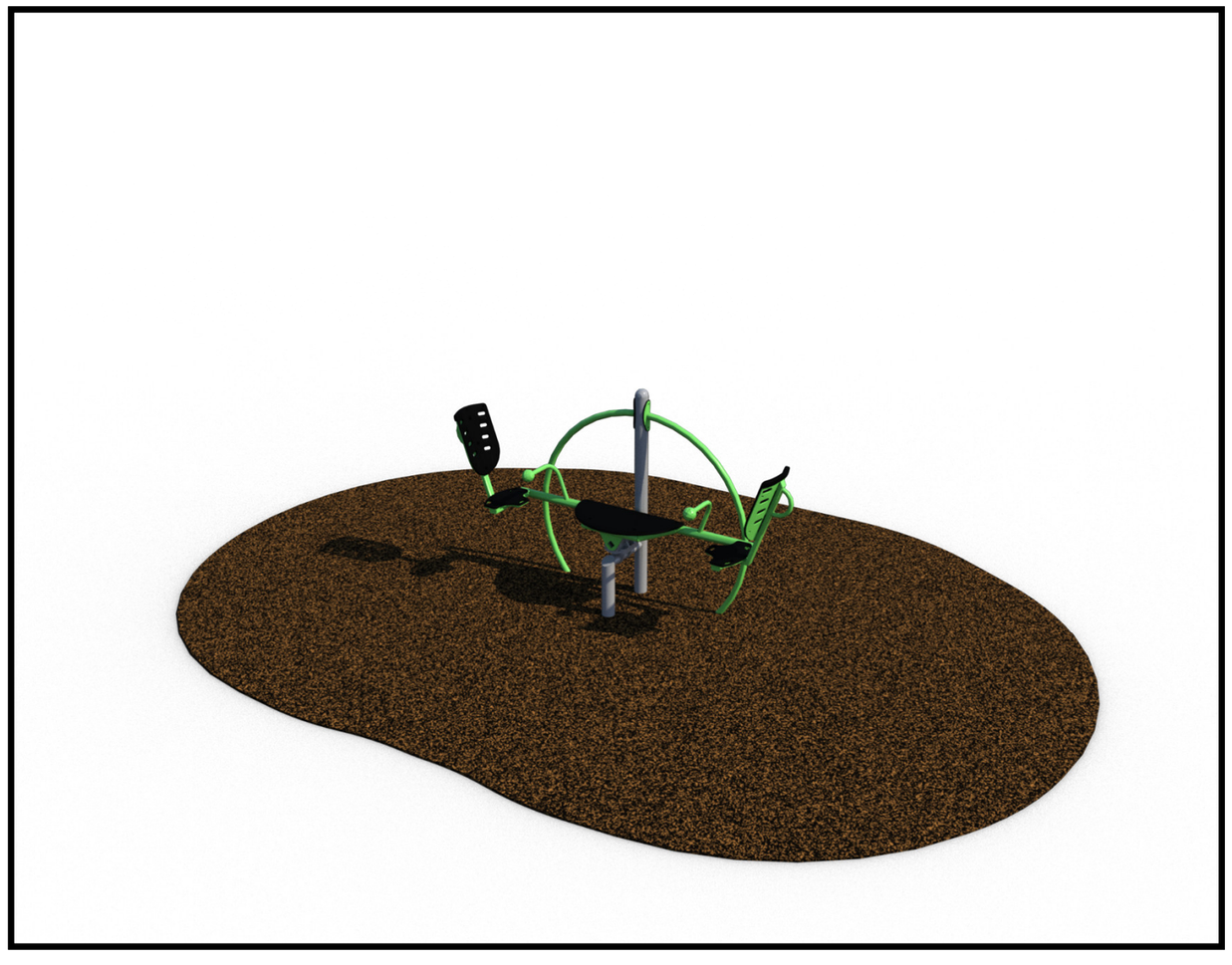

Freestanding

Dennis Inclusive Seesaw

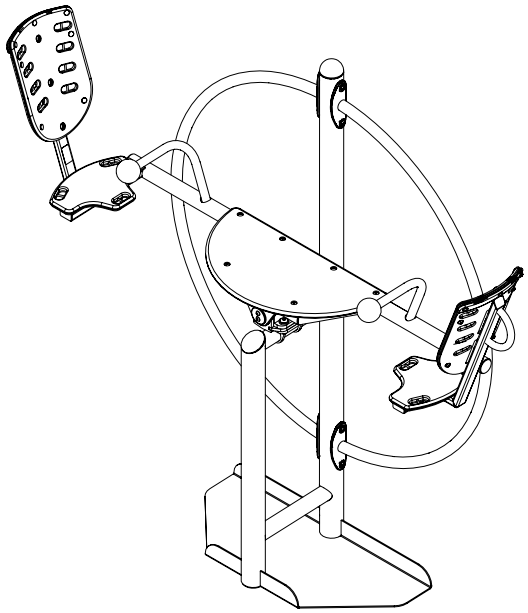

Model MR8097781
Model MR8097802

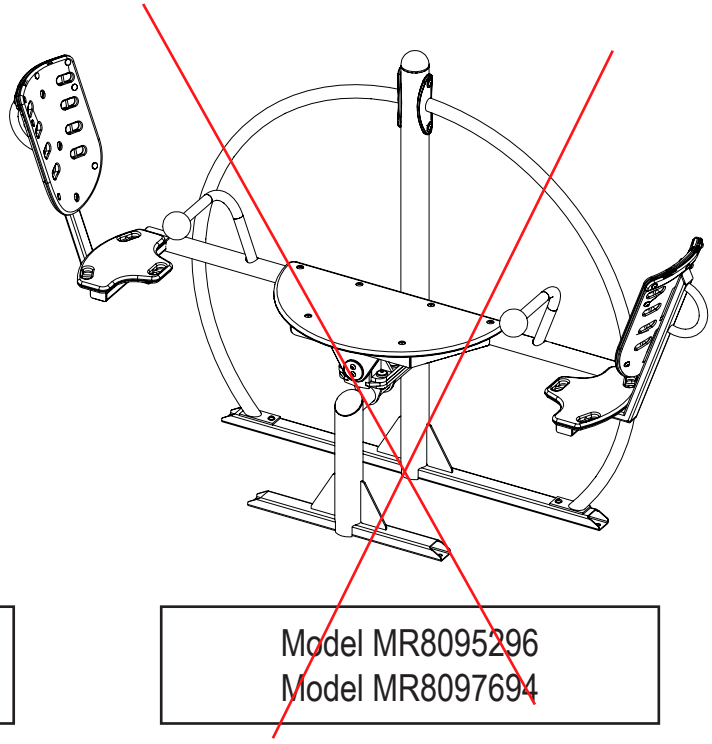

Model MR8095296
Model MR8097694

Model #	*Product*	*Ground Space*	*Protective Area*	*Concrete*
MR8097781	Dennis Incl Seesaw Green	8.3' x 2.0'	21' x 16'	0.44 cu. yds
MR8097802	Dennis Incl Seesaw Gray	8.3' x 2.0'	21' x 16'	0.44 cu. yds
MR8095296	Dennis Seesaw Green BD/SM	8.3' x 2.0'	21' x 16'	0.42 cu. yds
MR8097694	Dennis Seesaw Grey BD/SM	8.3' x 2.0'	21' x 16'	0.42 cu. yds

DESCRIPTION

The Dennis Seesaw shall provide a sitting see-saw action. Users on opposite seats can grasp either the curved handrail, connected to the anchored post serving as a fulcrum, and alternately they can use their feet to push off the ground to see-saw.

Freestanding

Dennis Inclusive Seesaw

MATERIALS

Seat Weldment	The horizonal chair support shall be fabricated from 60.3mm (2.37") O.D. steel tubing. The chair frame structure shall be fabricated from 50.8mm (2") by 30.5mm (1.2") steel rectangular tubing. The seats and the center stand shall be fabricated from 12.7mm (0.5") HDPE and reinforced with 6.350mm (0.25") thick sheet metal.
Base Weldment	The vertical posts shall be fabricated from 88.9mm (3.5") O.D. 10 gauge steel tubing.
Round Support Weldment	The round support weldments shall be fabricated from 42.2mm (1.66") O.D. steel tubing.
Finishes	After fabrication all metal parts shall be painted per PPLT PAINT Specification.

Consult Miracle's "Glossary of Technical Data for Materials, Processes & Finishes" for specifications of underlined items.

WEB ROPE – GREEN

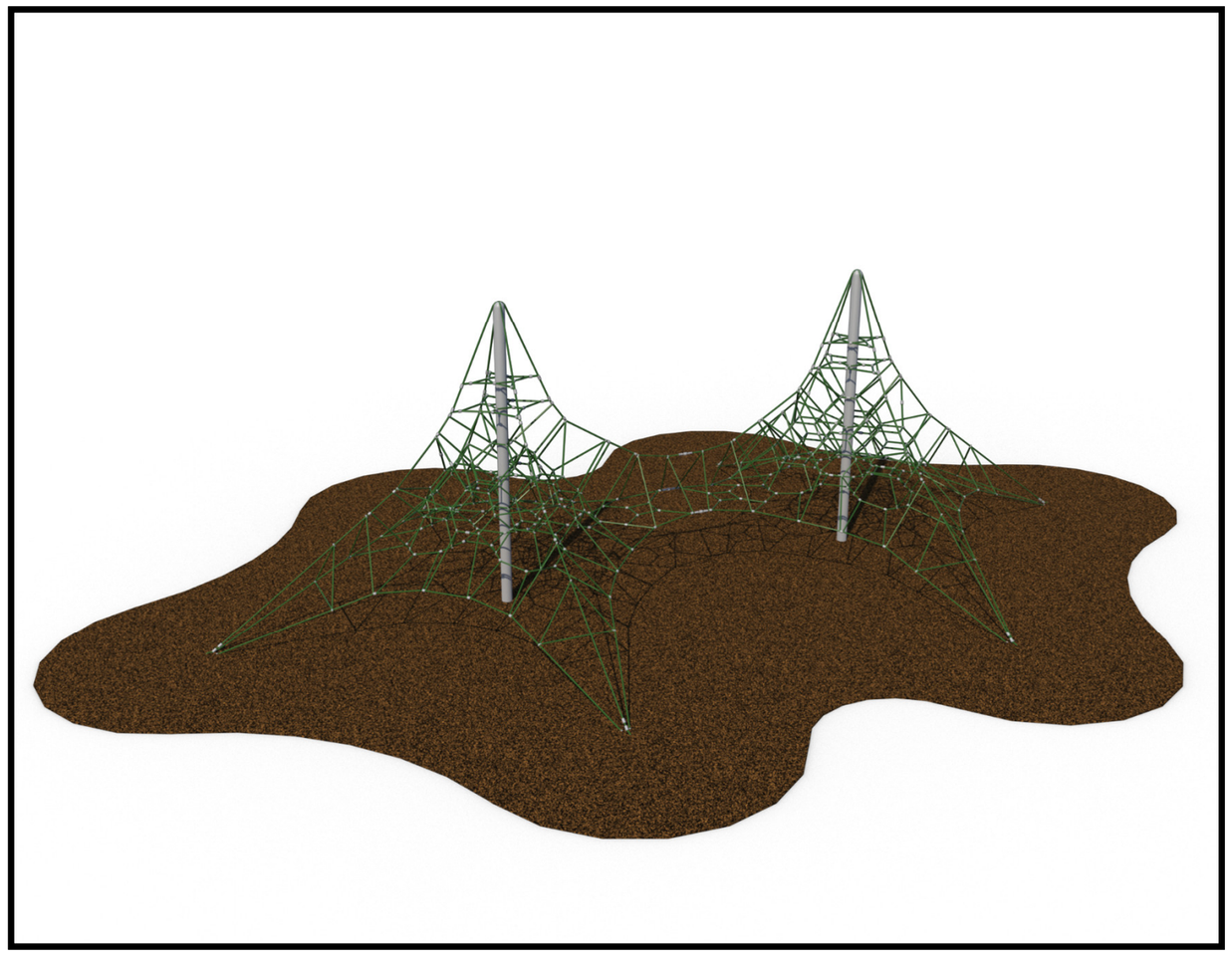

Webscapes™ Activity Nets

Gemini™ (4m) and Perseus™ (6m) - In Ground

4434
Gemini (4m) Activity Net

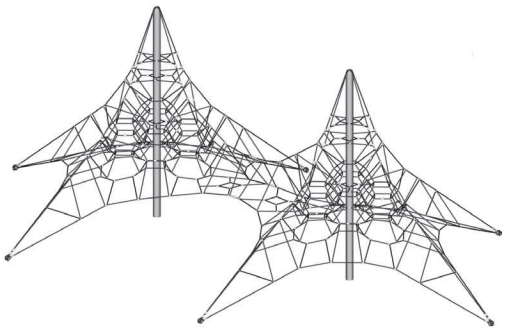

4436
Perseus (6m) Activity Net

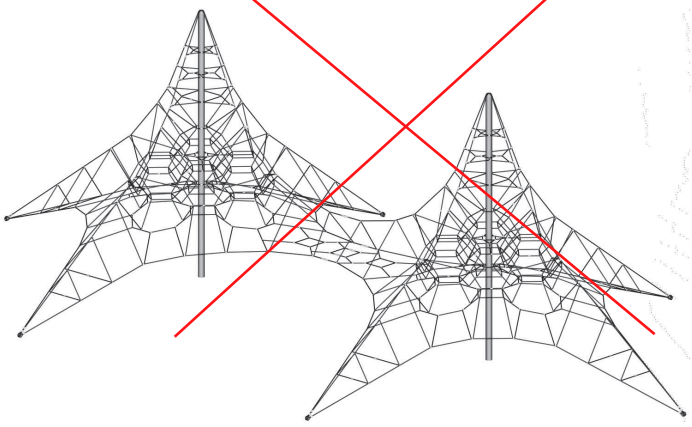

MODEL	PRODUCT	GRND SPC	PROT AREA	CONCRETE
4434	Webscapes Gemini (4m) Activity Net	42'-6" x 25'-5"	55' x 38'	11.13 cu. yds.
4436	Webscapes Perseus (6m) Activity Net	66'-3" x 38'-3"	86' x 57'-11"	11.13 cu. yds.

DESCRIPTION

These Webscapes Activity Nets are freestanding climbers comprising interlinked nylon ropes anchored to the ground in six corners and ascending to the apex of two central masts.

MATERIALS

Activity Nets: The nets shall be constructed of 18mm diameter, steel reinforced nylon braided rope with heavy duty aluminum joints hydraulically pressed into position (with a bursting strength in excess of 2.5 metric tons), CNC machined top caps, galvanized foundation steelwork, and two central masts of 5" O.D., 11 ga., stainless steel tube. The nylon rope is specially woven to produce a durable yet extremely soft covering. The rope shall have a minimum safe working load of 9000 kg and shall comply with ISO R114/DS2114 and ISO 2232.

Fasteners: The assembly shall contain Fastener Style A hardware.

Finishes: The nylon braided rope shall be available in a variety of colors.

Consult Miracle's "Glossary of Technical Data for Materials, Processes and Finishes" for specifications of underlined items.

POST – DARK BROWN

PLASTIC – FOREST GREEN

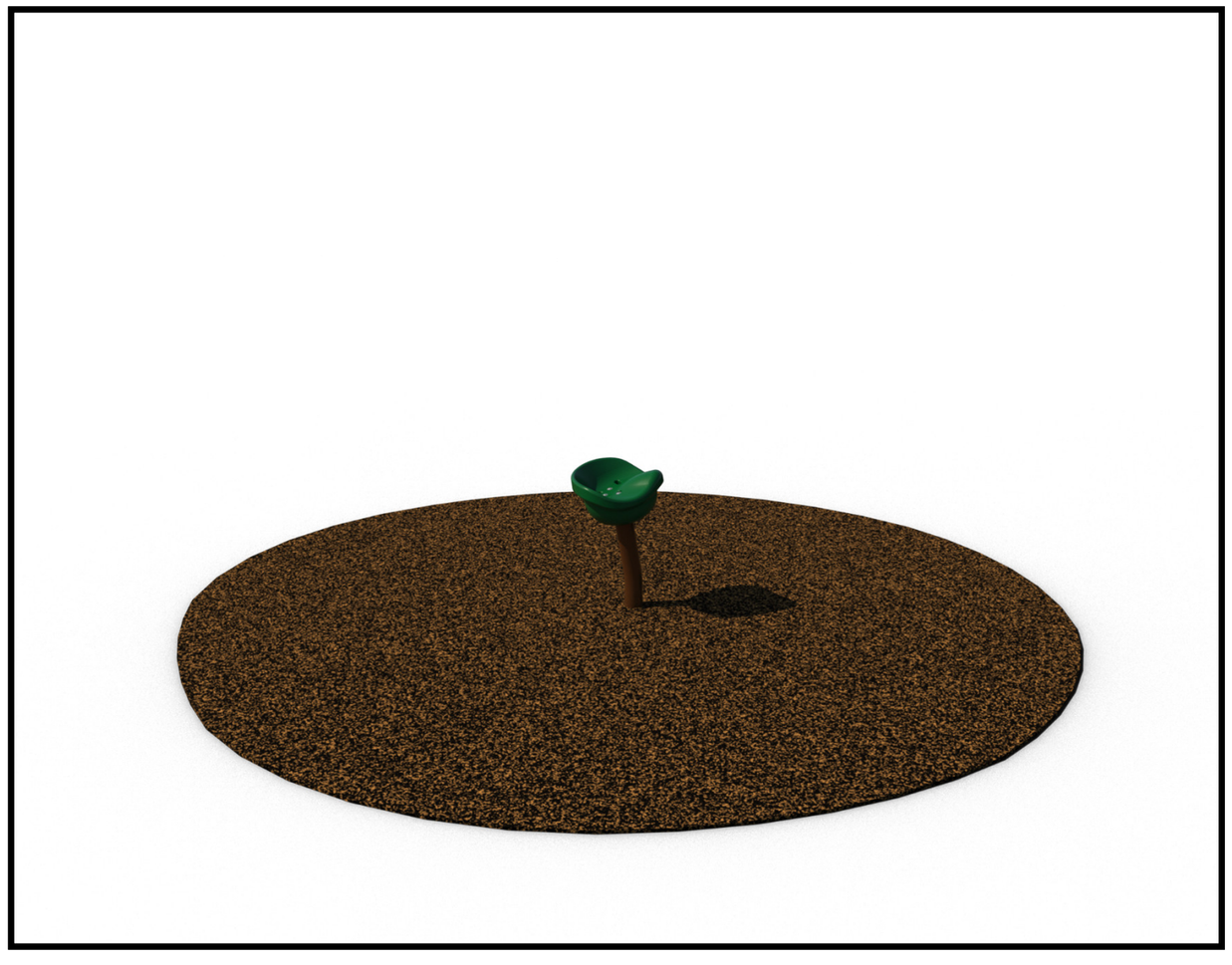

Freestanding **Saddle Seat**

945-1
Saddle Seat-Angled Post



945-2
Saddle Seat-Straight Post

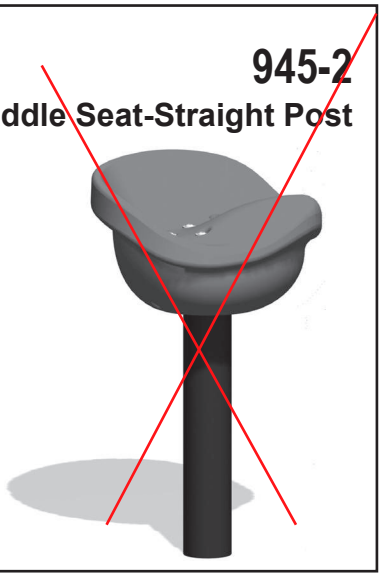

MODEL	PRODUCT	GRND SPACE	PROT. AREA	CONCRETE
945-1	Saddle Seat-Angled Post	1'-2 1/2" x 1'-4 1/4"	14" DIA	0.16 cu. yds
945-2	Saddle Seat-Straight Post	1'-2 1/2" x 1'-4 1/4"	14" DIA	0.16 cu. yds

DESCRIPTION

The freestanding Saddle Seat is an amazing spinning component that supports the principles of inertia by keeping kids spinning merely by use of body weight. Entire assembly shall measure 66 5/8" in height, 18 5/8" in width and 16 13/16" in length.

MATERIALS

Seat: Shall be constructed of rotomolded Rockite® which shall be contoured for comfort and include water drain holes. Hand grips shall be molded into the sides.

Post Assembly: The spindle shaft shall be fully welded to a spacer constructed of 3/8" A36 hot rolled steel plate, which shall be fully welded to a post constructed of 3 1/2" x 13 ga. galvanized steel tubing. A base plate of 11 ga. galvanized sheet steel shall be welded to the bottom of the post to facilitate installation and retain the post in the concrete footing. Model 945-1 post assembly shall have a 10° bend.

Hub/Spindle Assembly: Hub assembly shall comprise a 2,500 lb. capacity industrial trailer hub with tapered roller bearings. Bearings shall be packed with grease prior to assembly and protected against contaminants through an elastomeric seal around spindle shaft.

Fasteners: All fastening hardware shall be Fastener Style A.

Finishes: The Rockite® seat shall have color molded in. The post assembly and exposed hub surfaces shall be finished in Mira-Cote®

Consult Miracle's "Glossary of Technical Data for Materials, Processes and Finishes" for specifications of underlined items.

SHELTER COVE BEST BUDDIES PARK - REV C – HILTON HEAD, SC

5-12 PLAY STRUCTURE SPECIFICATIONS FOR SUBMITTAL

POST – DARK BROWN

ACCENTS – SAND

STEEL ROOFS – SAND

FABRIC ROOFS – DESERT SAND

PVC DECKS – BROWN

PLASTIC SLIDES – COBALT HOODS, SAND BEDWAY

CHAMELEON SLIDES – GREEN/FOREST GREEN

TUBE SLIDES – GREEN ENTRANCE/EXIT, SAND TUBE, COBALT RINGS

HDPE PANELS – BROWN/SAND/BROWN





SHELTER COVE BEST BUDDIES PARK - REV C – HILTON HEAD, SC

5-12 PLAY STRUCTURE SPECIFICATIONS FOR SUBMITTAL

POST – DARK BROWN

ACCENTS – SAND

STEEL ROOFS – SAND

FABRIC ROOFS – DESERT SAND

PVC DECKS – BROWN

PLASTIC SLIDES – COBALT HOODS, SAND BEDWAY

CHAMELEON SLIDES – GREEN/FOREST GREEN

TUBE SLIDES – GREEN ENTRANCE/EXIT, SAND TUBE, COBALT RINGS

HDPE PANELS – BROWN/SAND/BROWN





Miracle Museum - SpinAtorium, Odyssey Hall, Dynamics Lab, Grand Gallery, Momentum Corridor, Tranquility Corner Frame (Inground and Bolt Down), Ground Level Panels (Falling Washer, Zoetrope, Push Pin)

453-1, 453-1BD
SpinAtorium



453-2, 453-2BD
Odyssey Hall

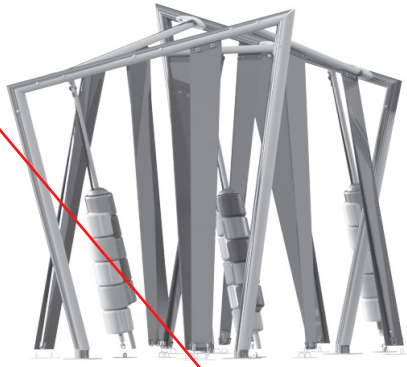

453-3, 453-3BD
Dynamics Lab

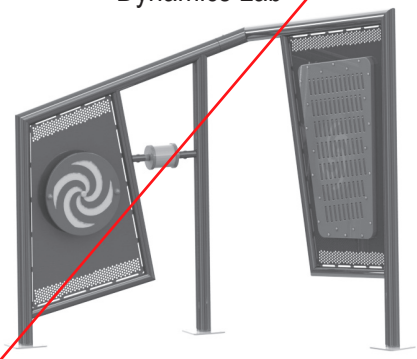

453-4, 453-4BD
Grand Gallery

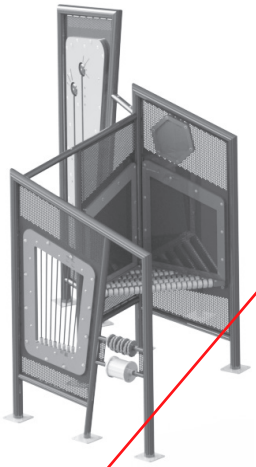

453-5, 453-5BD
Momentum Corridor

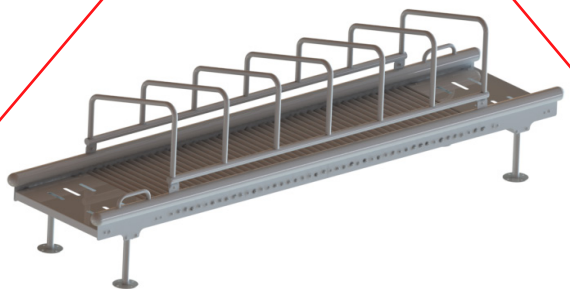

453-704, 453-704BD
Tranquility Corner Frame

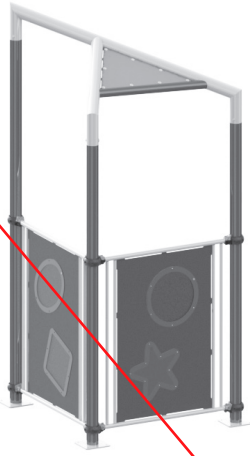

Consult Miracle's "Glossary of Technical Data for Materials, Processes and Finishes" for specifications of underlined items.

Miracle Museum

453-1, 453-1BD, 453-2, 453-2BD, 453-3, 453-3BD, 453-4, 453-4BD, 453-5, 453-5BD, 453-704, 453-704BD, 7146981, 7146982, 7146983, 7186981, 7186982, 7186983

Miracle Museum - SpinAtorium, Odyssey Hall, Dynamics Lab, Grand Gallery, Momentum Corridor, Tranquility Corner Frame (Inground and Bolt Down), Ground Level Panels (Falling Washer, Zoetrope, Push Pin)

7146981
Museum Washer Panel
KC - ground level

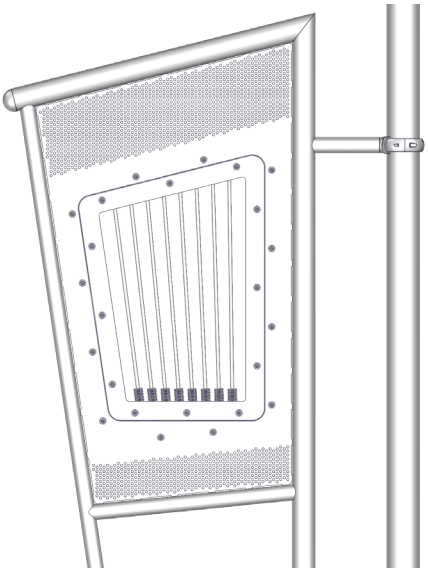

7146982
Museum Zoetrope Panel
KC - ground level

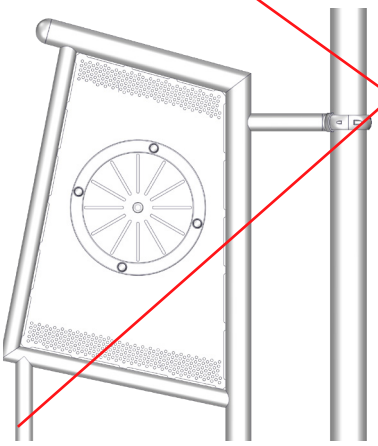

7146983
Museum Push Pin Panel
KC - ground level

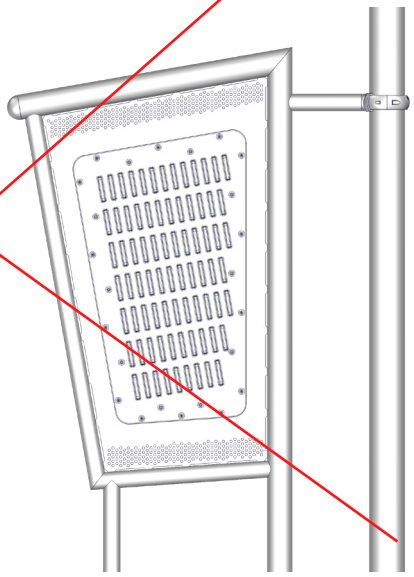

7186981
Museum Washer Panel
TC - ground level

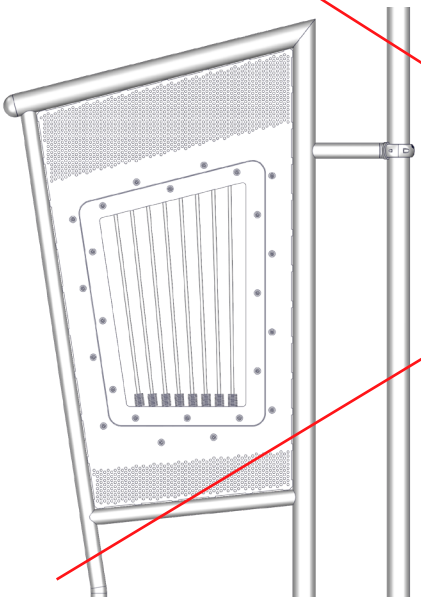

7186982
Museum Zoetrope Panel
TC - ground level

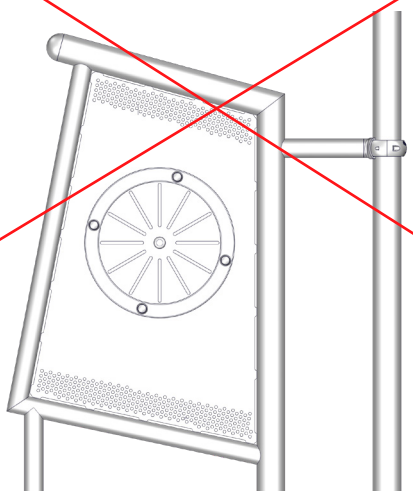

7186983
Museum Push Pin Panel
TC - ground level

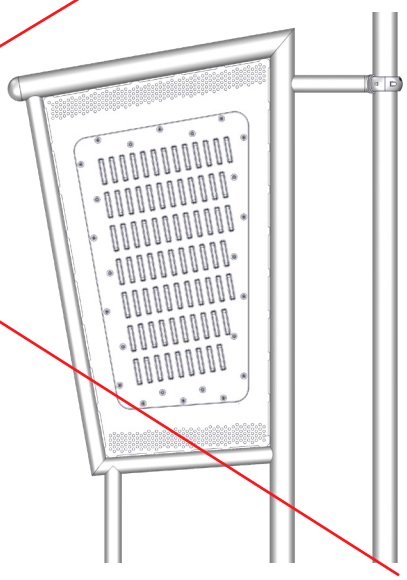

Miracle Museum - SpinAtorium, Odyssey Hall, Dynamics Lab, Grand Gallery, Momentum Corridor, Tranquility Corner Frame (Inground and Bolt Down), Ground Level Panels (Falling Washer, Zoetrope, Push Pin)

Model #	*Product*	*Ground Space*	*Concrete*
453-1	MM SpinAtorium (Inground)	N/A	0.13 cu.yds.
453-1BD	MM SpinAtorium (Bolt Down)	N/A	N/A
453-2	MM Odyssey Hall (Inground)	9' x 7'	2.40 cu.yds.
453-2BD	MM Odyssey Hall (Bolt Down)	9' x 7'	N/A
453-3	MM Dynamics Lab (Inground)	7' x 5'	0.39 cu.yds.
453-3BD	MM Dynamics Lab (Bolt Down)	7' x 5'	N/A
453-4	MM Grand Gallery (Inground)	10' x 10'	0.96 cu.yds.
453-4BD	MM Grand Gallery (Bolt Down)	10' x 10'	N/A
453-5	MM Momentum Corridor (Inground)	3' x 12'	0.48 cu.yds.
453-5BD	MM Momentum Corridor (Bolt Down)	3' x 12'	N/A
453-704	MM Tranquility Corner Frame	5' x 5'	0.50 cu.yds.
453-704BD	MM Tranquility Corner Frame Bolt Down	5' x 5'	N/A
714-698-1	Museum Washer Panel KC-Ground Level	1' x 6'	0.24 cu. yds.
718-698-1	Museum Washer Panel TC-Ground Level	1' x 6'	0.24 cu. yds.
714-698-2	Museum Zeotrope Panel KC-Ground Level	1' x 5'	0.24 cu. yds.
718-698-2	Museum Zeotrope Panel TC-Ground Level	1' x 5'	0.24 cu. yds.
714-698-3	Museum Push Pin Panel KC-Ground Level	1' x 5'	0.24 cu. yds.
718-698-3	Museum Push Pin Panel TC-Ground Level	1' x 5'	0.24 cu. yds.

Miracle Museum

Miracle Museum - SpinAtorium, Odyssey Hall, Dynamics Lab, Grand Gallery, Momentum Corridor, Tranquility Corner Frame (Inground and Bolt Down), Ground Level Panels (Falling Washer, Zoetrope, Push Pin)

DESCRIPTION

The Miracle Museum playevents are designed to be enjoyed by children of all abilities, including autism, developmental delays and those that use mobility devices. Children can use their imagination and enhance creative play. The Miracle Museum playevents may be freestanding, clustered or grouped with other Miracle Museum playevents.

MATERIALS

Spinner Assembly:	Shall be constructed from 3/4" and 1/2" Mira-lene routed panels, bronze bearing and polymer and stainless steel balls inside the spinner and covered by a transparent polycarbonate bubble.
Post Weldment:	Shall be made from 3/5" x 11ga. galvanized steel tubing, 7 ga. galvanized steel sheet and 3/8" steel plate.
Odyssey Hall Frame Weldments:	Shall be constructed of tube 3.500 OD x 11 ga. galvanized with tabs and blocks made from SHST GAL 3.0mm (11ga.) and 5/8" mild steel block hanger.
Cross Members:	Shall be constructed from tube 2.375 OD x 12 ga. galvanized with tabs and blocks made from SHST GAL 3.0mm (11 ga.) and 5/8" mild steel block hanger.
Spinners:	Shall be made from rotational molded plastic and 9.5mm (.38") grey textured styrene butadiene rubber (SBR).
Ropes:	Shall be steel reinforced nylon braided rope with a galvanized foundation steelwork.
Chains:	Shall be 4/O straight link coil chain.
Odyssey Hall Finish:	The frame shall have a MICA-Cote™ finish.
Dynamics Lab Frame Weldments:	Shall be constructed of tube 3.500 OD x 11 ga. galvanized, tube 2.375 OD x 16 ga. galvanized and SHST GAL 3.0mm (11 ga.). Footings for bolt down version will be made from plate 9.5mm (3/8") A36 and welded to the main frame.
Gear Spinner:	Shall be constructed from 1/2" Mira-lene routed gears separated by spacers constructed from 1/4" Mira-lene. Gears and spacers are to be assembled onto a M10 threaded rod.
Ground Level Panel Weldments:	Shall be constructed of tube 3.500” OD x 11 ga. galvanized tube, 2.375” OD x 10 ga. galvanized, tube 2.375” OD x 12 ga. galvanized tube and 3.0mm (11 ga.) galvanized sheet.

Consult Miracle's "Glossary of Technical Data for Materials, Processes and Finishes" for specifications of underlined items.

453-1, 453-1BD, 453-2, 453-2BD, 453-3, 453-3BD, 453-4, 453-4BD, 453-5, 453-5BD, 453-704, 453-704BD, 7146981, 7146982, 7146983, 7186981, 7186982, 7186983

Miracle Museum - SpinAtorium, Odyssey Hall, Dynamics Lab, Grand Gallery, Momentum Corridor, Tranquility Corner Frame (Inground and Bolt Down), Ground Level Panels (Falling Washer, Zoetrope, Push Pin)

Mounting Weldments:	Shall be constructed of RDTB ILG 42.2 x 3.0, SHST GAL 3.0mm (11ga.) and tube 1.315 OD x 11 ga. galvanized and used to mount the drum. The weldment for the spinner events shall be constructed of SHST HR 4.5mm (7 ga.) and 1215 steel.
Router Events:	Shall be constructed from 3/4" sheet laminated HDPE or 1/2" sheet HDPE.
Dynamics Lab Finish:	The frame shall have a MICA-Cote™ finish.
Grand Gallery Frame:	Shall be constructed of 3 1/2" OD x 11 ga. galvanized tube, 2 3/8" OD x 12 ga. galvanized tube, 1 5/8" x 11 ga. galvanized tube and 3.0mm galvanized sheet. Footings for bolt down version shall be constructed of 3/8" A36 plate, welded.
Activities:	Shall be constructed from 1/2" laminated high-density polyethylene, 3/4" laminated high-density polyethylene, 1/4" translucent colored polycarbonate, cast alloyed aluminum bells, golf balls, mirrored finish stainless steel, polystyrene high impact static cylinders in red and blue and 1/2" stainless steel acme threaded rod.
Momentum Corridor Slide:	Slide sides shall be constructed of 4.6mm galvanized sheet, 3 1/2" x 13 ga. galvanized tube and 25.4 x 14 ga. tube. Slide decks shall be constructed of 2.3mm galvanized sheet. Rollers shall be constructed of 2" aluminum tubing with nitrile bearings on stainless steel shafts.
Roof:	Slide roof shall be constructed of 4.6mm galvanized sheet, 3.0mm galvanized sheet, 1 7/8" x 11 ga. tube and 1 5/16" x 14 ga. tube.
Support:	Slide support shall be constructed of 1 5/8" x 11 ga. galvanized tube and 4.6mm galvanized sheet.
Tranquility Corner Top Weldment:	Top weldment shall be made from: corner cross member 1, tube rnd 3.500 11ga. glv; corner cross member 2, tube rnd 3.500 11ga. glv; corner cross member 3, tube rnd 2.375 12ga. glv; corner bolt panel 1, 2 and 3, sheet 11ga. galv (3.0mm).
Triangle Roof (KODA):	Shall be constructed of KODA XT 1/4".
Corner Leg 1 and 2:	Shall be constructed of tube rnd 3.500 11ga. glv.
All Models Fasteners:	All hardware shall be Fastener Style A.
Finishes (unless otherwise stated):	The frame assembly and Versalok Fasteners shall have a Mira-Cote™ finish.
Versalok Fasteners:	All Versalok Fasteners for component attachment shall be aluminum alloy.

Consult Miracle's "Glossary of Technical Data for Materials, Processes and Finishes" for specifications of underlined items.

Kids' Choice ®, Tots' Choice ®, Tots' Choice ® Expansion

Attic Climber

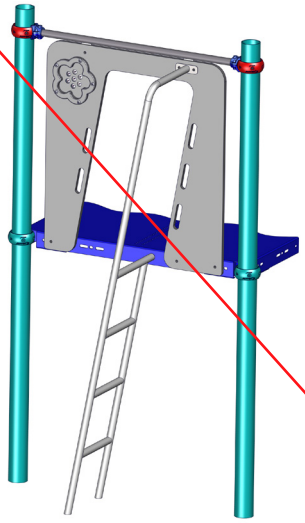

Attic Climber TCX
Model 7046964
Attic Climber Bolt Down TCX
Model 7046964BD

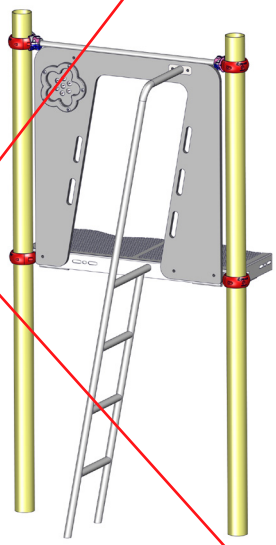

Attic Climber TC
Model 7186964
Attic Climber Bolt Down TC
Model 7186964BD

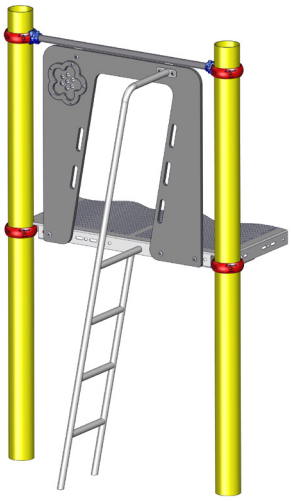

Attic Climber KC
Model 7146964
Attic Climber Bolt Down KC
Model 7146964BD

Model #	*Product*	*Ground Space*	*Protective Area*	*Concrete*
7046964	Attic Climber TCX	N/A	N/A	0.10 cu.yds.
7046964BD	Attic Climber Bolt Down TCX	N/A	N/A	N/A
7146964	Attic Climber KC	N/A	N/A	0.10 cu.yds.
7146964BD	Attic Climber Bolt Down KC	N/A	N/A	N/A
7186964	Attic Climber TC	N/A	N/A	0.10 cu.yds.
7186964BD	Attic Climber Bolt Down TC	N/A	N/A	N/A

Kids' Choice ®, Tots' Choice ®, Tots' Choice ® Expansion

Attic Climber

DESCRIPTION

The play events are designed to be enjoyed by children of all abilities. Children can use their imagination and enhance creative play. The play events can be used in a variety of ways such as freestanding, above deck, below deck, clustered or grouped together with other play events.

MATERIALS

Panels:	The panels shall be constructed of Mira-Lene™. The panels shall be supported between posts by tops and bottom rungs (as required) of 1" pipe, each with two tabs of 11 ga. A-60 Galvannealed sheet, solid welded. In addition to above panel materials, panel shall feature ½" HDPE and marble accents fastened to the panel.
Climber:	Attached to the panel is a climber comprised of 1" pipe and 7 ga. A-60 Galvannealed sheet, all solid welded.
All model fasteners:	Panel assemblies shall contain Versalok Fasteners. All hardware shall be fastener style A.
Finishes (unless otherwise stated):	The rungs, clamps, and other steel frames and accents shall have a Mira-Cote™ finish.

Consult Miracle's "Glossary of Technical Data for Materials, Processes & Finishes" for specifications of underlined items.

Tots' Choice ® Tots' Choice Expansion ® Kids' Choice ®

Flower Stand Panel, Thruway Panel, Widget Play Panel

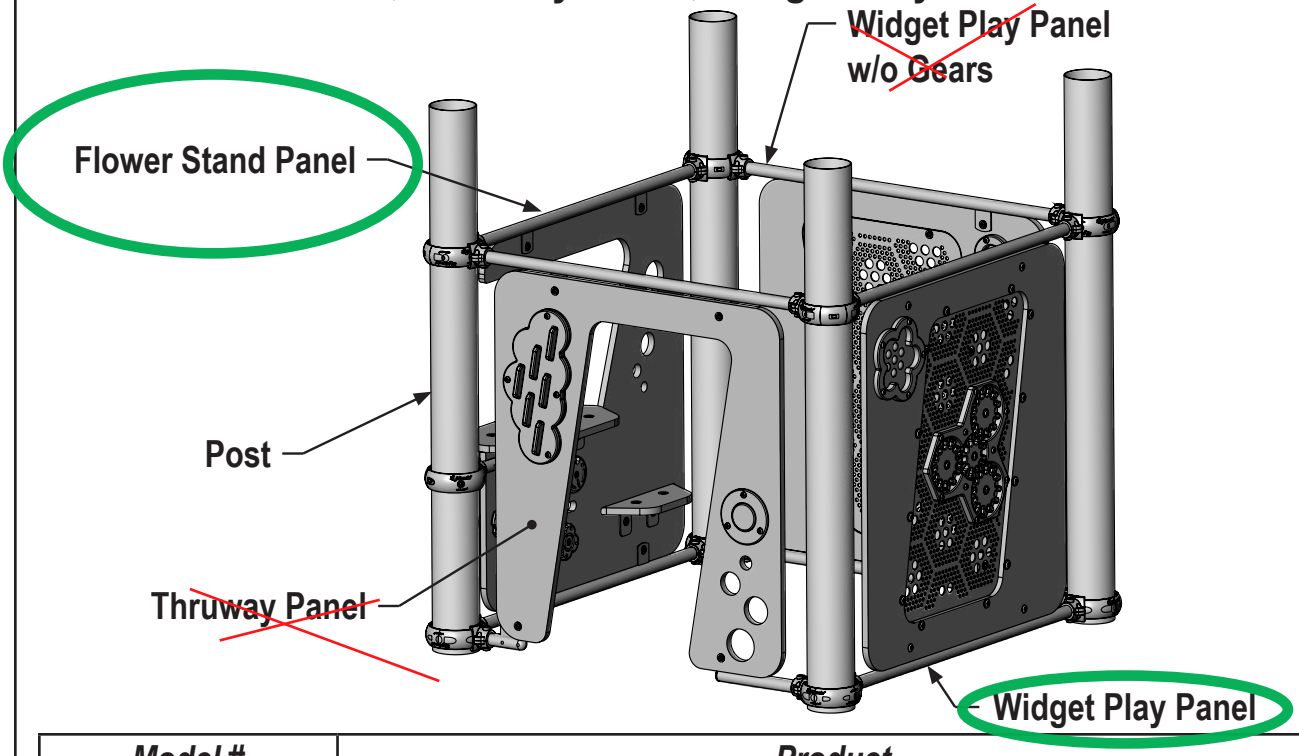

Model #	*Product*
70471521B	FLOWER STAND PANEL BELOW DECK TCX
71471521B	FLOWER STAND PANEL BELOW DECK KC
71871521B	FLOWER STAND PANEL BELOW DECK TC
70471522B	THRUWAY PANEL BELOW DECK TCX
71471522B	THRUWAY PANEL BELOW DECK KC
71871522B	THRUWAY PANEL BELOW DECK TC
70471523	WIDGET PLAY PANEL TCX
70471523B	WIDGET PLAY PANEL BELOW DECK TCX
71471523	WIDGET PLAY PANEL KC
71471523B	WIDGET PLAY PANEL BELOW DECK KC
71871523	WIDGET PLAY PANEL TC
71871523B	WIDGET PLAY PANEL BELOW DECK TC
70471524	WIDGET PLAY PANEL W/O GEARS TCX
70471524B	WIDGET PLAY PANEL W/O GEARS BELOW DK TCX
71471524	WIDGET PLAY PANEL W/O GEARS KC
71471524B	WIDGET PLAY PANEL W/O GEARS BELOW DK KC
71871524	WIDGET PLAY PANEL W/O GEARS TC
71871524B	WIDGET PLAY PANEL W/O GEARS BELOW DK TC

Flower Stand Panel, Thruway Panel, Widget Play Panel

70471521B, 71471521B, 71871521B, 70471522B, 71471522B, 71871522B, 70471523, 70471523B, 71471523, 71471523B, 71871523, 71871523B, 70471524, 70471524B, 71471524, 71471524B, 71871524, 71871524B

Tots' Choice ® Tots' Choice Expansion ® Kids' Choice ®

Flower Stand Panel, Thruway Panel, Widget Play Panel

DESCRIPTION

The play events are designed to be enjoyed by children of all abilities. Children can use their imagination and enhance creative play. The play events can be used in a variety of ways such as freestanding, above deck, below deck, clustered or grouped together with other play events.

MATERIALS

Panels:	The panels shall be constructed of Mira-Lene™. The panels shall be supported between posts by tops and bottom rungs (as required) of 1" pipe, each with two tabs of 11 ga. A-60 Galvannealed sheet, solid welded.
Flower Stand Panel:	In addition to above panel materials, panel shall feature Mira-Lene™ flower accents fastened to the panel. Seats shall be supported with tabs of 7 ga. A-60 Galvannealed sheet, bent.
Thruway Panel:	In addition to above panel materials, panel shall feature a combination of ¼" and ½" HDPE interactive accents fastened to the panel. The panel shall attach to the panel bracket with a tab of 7 ga. A-60 Galvannealed sheet.
Widget Play Panel:	In addition to above panel materials, panel shall feature a combination of perforated 11 ga. A-60 Galvannealed sheet, ½" HDPE, and marble accents fastened to the panel.
Posts:	The posts shall be comprised of 5" tube or 3 1/2" tube, 11 ga. or 13 ga. wall thickness
All model fasteners:	Panel assemblies shall contain Versalok Fasteners. All hardware shall be fastener style A.
Finishes (unless otherwise stated):	The rungs, clamps, and other steel frames and accents shall have a Mira-Cote™ finish.

Consult Miracle's "Glossary of Technical Data for Materials, Processes & Finishes" for specifications of underlined items.

Kids' Choice® - Mira-Therm II

Decks

Deck Posts not included in these assemblies.

714-501-9

Triangle Deck

Model # 714-501-9 requires three (3) Posts.

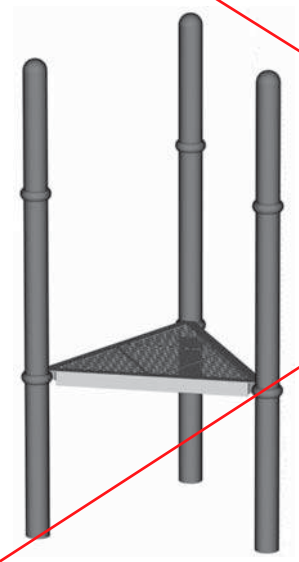

714-502-9

Square Deck

Model # 714-502-9 requires four (4) Posts.

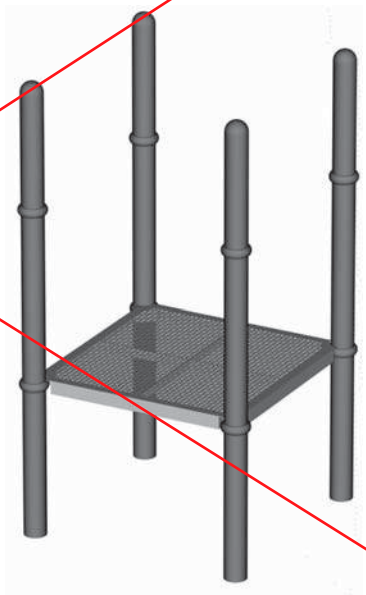

714-503-9

Half Hex Deck (Full)

Model # 714-503-9 requires four (4) Posts.



714-504-9

Half Hex Deck

Model # 714-504-9 requires five (5) Posts.

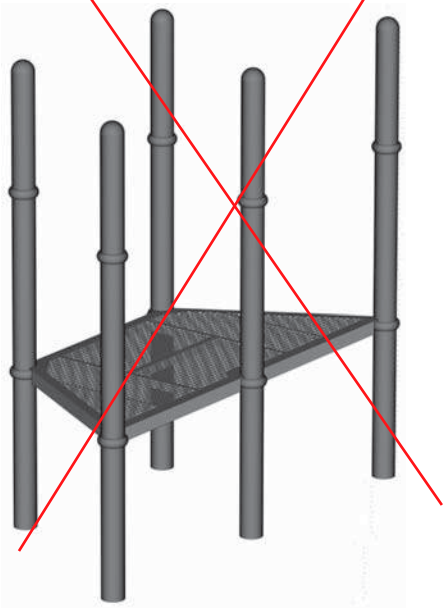

Kids' Choice® - Mira-Therm II

Decks

714-508-9

Rectangle Deck (Full)

Model # 714-508-9 requires four (4) Posts.

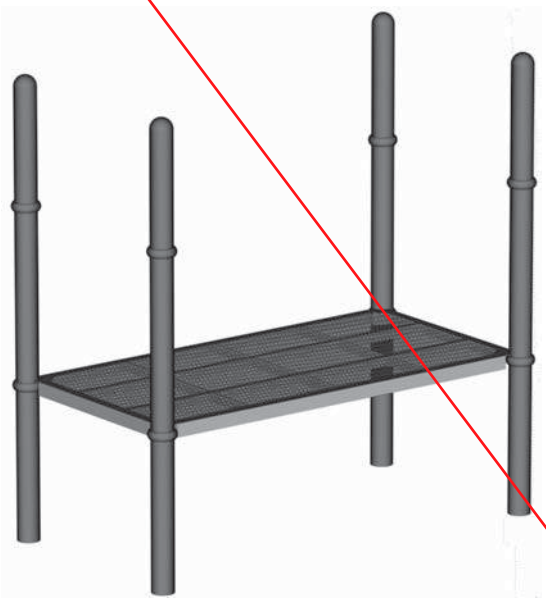

714-509-9

Rectangle Deck (Half Open)

Model # 714-509-9 requires five (5) Posts.

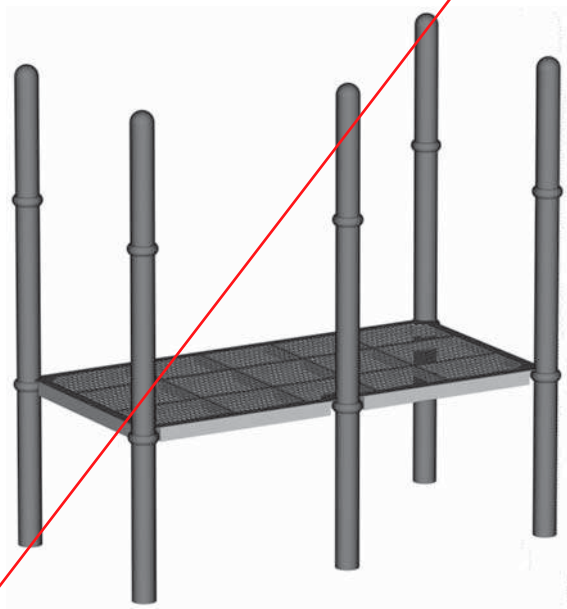

714-510-9

Rectangle Deck (Open)

Model # 714-510-9 requires six (6) Posts.

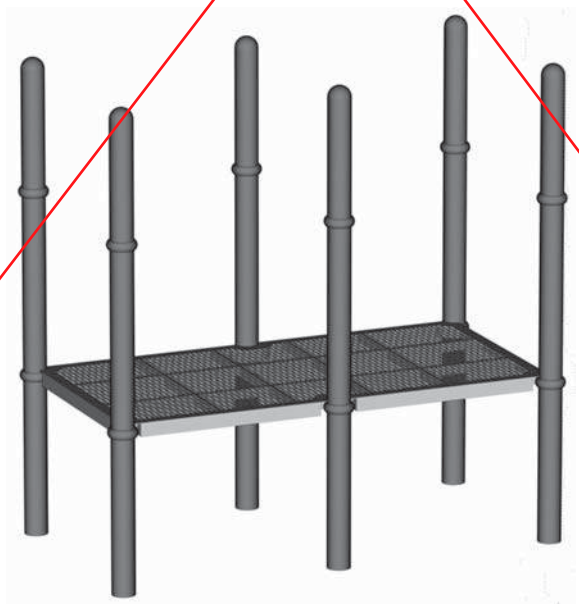

Kids' Choice® - Mira-Therm II

Decks

714-512-9

Pentagon Deck

Model # 714-512-9 requires five (5) Posts.

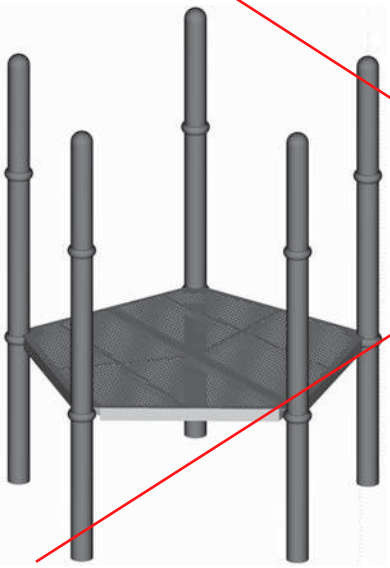

714-517-9

Heptagon Deck

Model # 714-517-9 requires seven (7) Posts and one (1) middle support post.

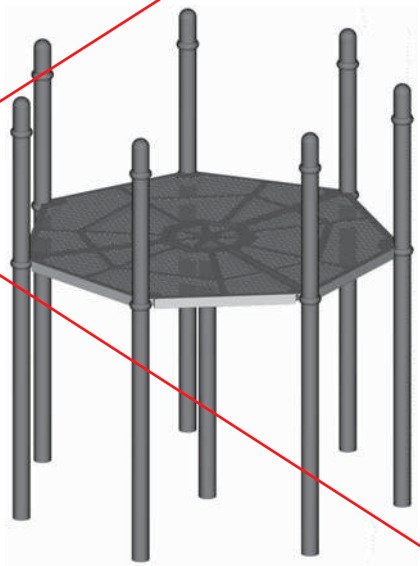

THIS SPACE INTENTIONALLY LEFT BLANK

Kids' Choice® - Mira-Therm II

Decks

MODEL #	PRODUCT	POSTS REQ'D	DECK SURFACE	CONCRETE
714-501-9	Triangle Deck	3	7 sq. ft.	See Post specs
714-502-9	Square Deck	4	16 sq. ft.	"
714-503-9	Half Hex Deck (Full)	4	21 sq. ft.	"
714-504-9	Half Hex Deck (Open)	5	21 sq. ft.	"
714-508-9	Rectangle Deck (Full)	4	32 sq. ft.	"
714-509-9	Rectangle Deck (Half Open)	5	32 sq. ft.	"
714-510-9	Rectangle Deck (Open)	6	32 sq. ft.	"
714-512-9	Pentagon Deck	5	26.5 sq. ft.	"
714-517-9	Heptagon Deck	7	55 sq. ft.	"

DESCRIPTION

Mira-Therm II deck models include an equilateral triangle deck, a square deck, two half hexagon decks, three rectangular decks, a pentagon deck, and a heptagon deck. Decks are designed for maximum flexibility in height of deck surface, from 0" to 6'-6" (in 6" increments), though 3', 5', and 6'-6" are considered standard deck heights.

Decks are designed on a 48" center-to-center spacing on 5" deck posts, at equal or varied heights. All deck-to-post connections are made with a deck support clamp. All deck connections are made beneath deck with no exposed fasteners on deck perimeter. Decks with 8' wide open side are designed to attach to another deck with 8' wide open side at same deck height.

MATERIALS

Decks: All decks shall be constructed with folded 11 ga. steel sheet forming 3" tall sides. Decking sheets shall be perforated with a staggered pattern of 3/8" diameter holes at 5/8" apart center-to-center. The decking shall have 7 ga. by 2" flat steel braces and corner braces of 7 ga. steel. The entire assembly shall be solid welded prior to PVC coating.

Fasteners: Deck assemblies shall contain Versalok Fasteners and Fastener Style A hardware.

Finishes: All deck surfaces shall be coated in Mira-Therm. Clamps shall have a Mira-Cote finish.

Consult Miracle's "Glossary of Technical Data for Materials, Processes & Finishes" for specifications of underlined items.

Kids' Choice® - Heptagon Mega Tower®

2-Level Decks

714-521-7

Heptagon Mega Tower 2-Level (2' & 8') Deck

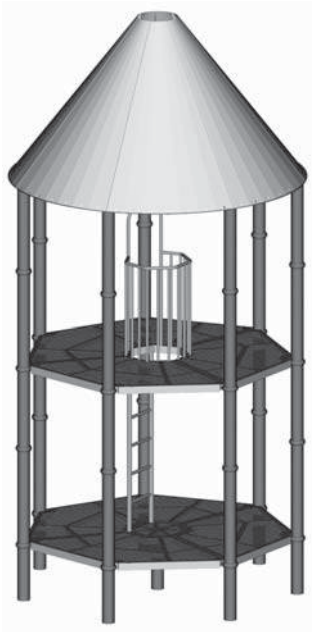

Assembly shown with Model # 714-799-7 Play Cone Roof for Heptagon Deck, not included. Model requires a roof, barriers and other play events.

714-523-7

Heptagon Mega Tower 2-Level (4' & 10') Deck



Assembly shown with Model # 714-799-7 Play Cone Roof for Heptagon Deck, not included. Model requires a roof, barriers and other play events.

714-523-7NR

Heptagon Mega Tower 2-Level (4' & 10') Deck (No Roof)

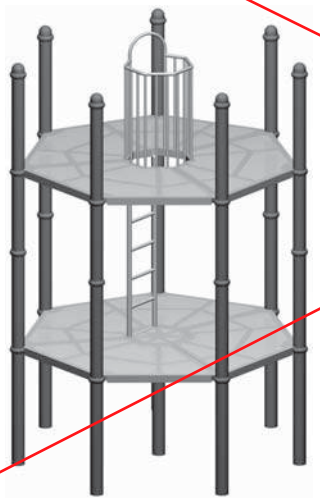

714-521-7NR

Heptagon Mega Tower 2-Level (2' & 8') Deck (No Roof)

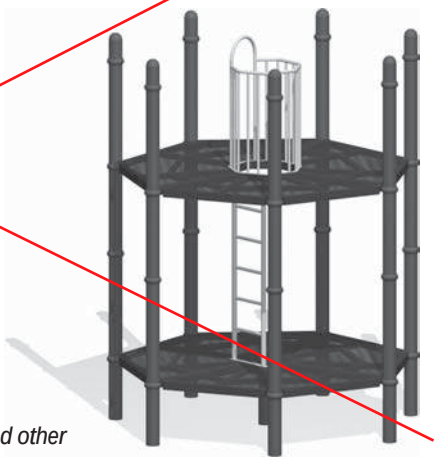

No roof models require barriers and other play events.

Kids' Choice® - Heptagon Mega Tower®

2-Level Decks

MODEL #	PRODUCT	GRD SPACE	PROT AREA	CONCRETE
714-521-7	Heptagon Mega Tower 2-Level Deck (2' & 8' Decks)	8'-8" x 8'-11"	21'-3" x 21'-6"	2 cu. yds.
714-523-7	Heptagon Mega Tower 2-Level Deck (4' & 10' Decks)	8'-8" x 8'-11"	21'-3" x 21'-6"	2 cu. yds.
714-523-7NR	Heptagon Mega Tower 2-Level Deck (4' & 10' Decks, no Roof)	8'-8" x 8'-11"	21'-3" x 21'-6"	2 cu. yds.
714-521-7NR	Heptagon Mega Tower 2-Level Deck (2' & 8' Decks, no Roof)	8'-8" x 8'-11"	21'-3" x 21'-6"	2 cu. yds.

DESCRIPTION

The Heptagon Mega Tower 2-Level Decks comprise two heptagonal decks - 2' and 8', or 4' and 10' - on common posts with an enclosed center climber for ascending to upper level. Model #s 714-521-7 and 714-523-7 require a roof as well as barriers or other play components. Model #s 714-523-7NR & 714-521-7NR require barriers and other play components, but have capped posts eliminating the need for a roof.

MATERIALS

Deck Assemblies: Seven-sided decks shall each consist of one (1) 3-Section Deck and two (2) 2-Section Decks, with 2' Deck also consisting of one (1) Center Deck Plug. Top deck surface area shall be 57 square feet. The deck length shall be 105" flat to post. The deck frame shall be constructed with folded 11 ga. steel sheet forming 3" tall sides. Decking sheets shall be perforated with a staggered pattern of 3/8" diameter holes at 5/8" apart center-to-center. Each shall contain deck support members of 3/16" x 2" flat and decking supports of 3/16" x 2-13/16" flat. Each section shall be solid welded. Post assemblies shall be constructed of 5" tube, 11 ga. The remaining posts shall be uncapped in readiness for roof attachment.

Center Climber: A center climber shall comprise a ladder and enclosure assembly. The ladder shall be constructed of two 1-1/2" pipe side rails with five 1" pipe rungs solid welded between them. Top ends of the rails shall contain 3/8" bolts for field attachment to upper deck. Bottom end of ladder shall have a 7 ga. steel sheet mounting plate for field assembly to lower deck. The overall width of the ladder assembly shall be 16". The angle of ascent shall be 0°. The enclosure assembly shall be constructed of a top rail of formed 1" pipe with uprights of 3/4" x 1" oval tube, solid welded, and a bottom mounting plate consisting of 7 ga. steel sheet.

Fasteners: The assembly shall contain Versalok Fasteners and Fastener Style A.

Finishes: The decks shall be finished in Mira-Therm. The center climber, posts, caps, and clamps shall be finished in Mira-Cote.

Consult Miracle's "Glossary of Technical Data for Materials, Processes & Finishes" for specifications of underlined items.

Kids' Choice®

Steel Posts (5" O.D., 11 ga. Round Tube) & Aluminum Posts

Steel Posts - 5" O.D., 11ga.

MODEL	DESCRIPTION	USES	PART NUMBER
714-545-3	144" Deck Post (Cheer Roof)	3' Deck	997292*
714-545-5	168" Deck Post (Cheer Roof)	5' Deck	997294*
714-545-6	186" Deck Post (Cheer Roof)	6'-6" Deck	908813*
714-545-8	204" Deck Post (Cheer Roof)	8' Deck	997297*
714-545-10	228" Deck Post (Cheer Roof)	10" Deck	908812*
714-549-1	88" Maze Post	Sensory Panel	925341*
714-549-3	112" Deck Post	3' Decks	995228*
714-549-4	124" Deck Post	4' Decks	995229*
714-550-3	206" Deck Post (PlayCover)	3' Deck & less	997215*
714-550-5	219" Deck Post (PlayCover)	3'-6" to 5' Decks	997218*
714-550-6	243" Deck Post (PlayCover)	5'-6" to 6'-6" Decks	997203*
714-550-8	258" Deck Post (PlayCover)	7' to 8' Decks	997315*
714-551	106" Deck Post	2'-6" Decks & less	713551*
714-552	136" Deck Post	3' to 5' Decks	713552*
714-552L	136" Deck Post w/CPSIA Label	3' to 5' Decks	996061*
714-553	160" Deck Post	5'-6" to 6'-6" Decks	713553*
714-554	178" Deck Post	7' to 8' Decks	713554*
714-556	196" Deck Post	10' Deck	985244*
714-571	106" Post (Roof)	Ground Level	713561*
714-571L	106" Post (Roof) w/CPSIA Label	Ground Level	996352*

Note: An (*) by a part number indicate: Color Code Required.

Consult Miracle's "Glossary of Technical Data for Materials, Processes and Finishes" for specifications of underlined items.

Kids' Choice®

Steel Posts (5" O.D., 11 ga. Round Tube) & Aluminum Posts

Steel Posts - 5" O.D., 11ga. cont.

MODEL	DESCRIPTION	USES	PART NUMBER
714-572	144" Deck Post (Roof)	3' Decks & less	713572*
714-573	168" Deck Post (Roof)	3'-6" to 5' Decks	713573*
714-574	186" Deck Post (Roof)	5'-6" to 6'-6" Decks	713574*
714-575	196" Deck Post (Uses 2 for Flippo Roof)	6'-6" Deck	985260*
714-576	204" Deck Post (Roof)	8' Deck	713818*
714-576-8	228" Deck Post (Topper)	8' Deck	994097*
714-576-10	252" Deck Post (Topper)	10' Deck	994407*

Aluminum Posts - 5" O.D.

MODEL	DESCRIPTION	USES	PART NUMBER
714-549-32	112" Deck Post	3' Decks	995230*
714-549-42	124" Deck Post	4' Decks	995231*
714-551-2	106" Deck Post	2'-6" Decks & less	713593*
714-552-2	136" Deck Post	5' Decks	713594*
714-552-2L	136" Deck Post w/CPSIA Label	5' Decks	996065*
714-553-2	160" Deck Post	5'-6" to 6'-6" Decks	713595*
714-554-2	178" Deck Post	7' to 8' Decks	713599*
714-571-2	106" Post (Roof)	Ground Level	713588*
714-572-2	144" Deck Post (Roof)	3' Decks & less	713589*
714-573-2	168" Deck Post (Roof)	3'-6" to 5' Decks	713590*
714-574-2	186" Deck Post (Roof)	5'-6" to 6'-6" Decks	713591*

Consult Miracle's "Glossary of Technical Data for Materials, Processes and Finishes" for specifications of underlined items.

714-545-3, 714-545-5, 714-545-6, 714-545-8, 714-545-10, 714-549-1, 714-549-3, 714-549-32, 714-549-4, 714-549-42, 714-550-3, 714-550-5, 714-550-6, 714-550-8, 714-551, 714-551-2, 714-552, 714-552L, 714-552-2, 714-552-2L, 714-553, 714-553-2, 714-554, 714-554-2, 714-556, 714-571, 714-571-2, 714-571L, 714-572, 714-572-2, 714-573, 714-573-2, 714-574, 714-574-2, 714-575, 714-576, 714-576-8, 714-576-10

Kids' Choice®

Steel Posts (5" O.D., 11 ga. Round Tube) & Aluminum Posts

CONCRETE 0.13 cubic yards required per post
0.26 cubic yards per post for model's 714-550-3, 714-550-5, 714-550-6 and 714-550-8.

DESCRIPTION Posts are used for support of deck systems and freestanding components.

MATERIALS

Steel Post Assembly: Steel posts shall be constructed of 5" tube, 11 ga. Posts not designed for roof assemblies shall have 5" round end caps pressed in at the factory.

Aluminum Post Assembly: Aluminum posts shall be constructed of 5" aluminum tube. Posts not designed for roof assemblies shall have 5" round end caps pressed in at the factory.

Fasteners: Components shall be field assembled to Posts by means of Versalok Fasteners, Fastener Style A hardware and/or Fastener Style B hardware.

Finishes: Post assemblies and clamps shall be finished in Mira-Cote.

Consult Miracle's "Glossary of Technical Data for Materials, Processes and Finishes" for specifications of underlined items.

714-545-3, 714-545-5, 714-545-6, 714-545-8, 714-545-10, 714-549-1, 714-549-3, 714-549-32, 714-549-4, 714-549-42, 714-550-3, 714-550-5, 714-550-6, 714-550-8, 714-551, 714-551-2, 714-552, 714-552L, 714-552-2, 714-552-2L, 714-553, 714-553-2, 714-554, 714-554-2, 714-556, 714-571, 714-571-2, 714-571L, 714-572, 714-572-2, 714-573, 714-573-2, 714-574, 714-574-2, 714-575, 714-576, 714-576-8, 714-576-10

Product Specifications

Kids' Choice®
5" O.D. Steel Arches for 3', 5' and 6'-6" Decks

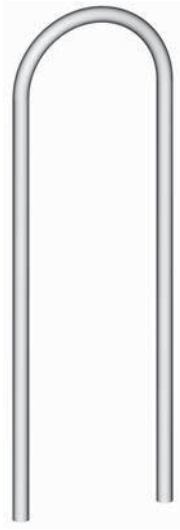

714-583, 714-585*, & 714-586*

5" O.D. Arch (3' Deck or less)

Model # 714-585, 5" O.D. Arch (3'-6" to 5' Deck), and
Model # 714-586, 5" O.D. Arch (5'-6" to 6'-6" Deck) not shown.
Installations are identical.

Top Views not shown.
Refer to Construction Drawing for Footing Layouts.

MODEL #	PRODUCT	CONCRETE
714-583	5" O.D. Arch (3' Deck or less)	0.25 cu. yds.
714-585	5" O.D. Arch (3'-6" to 5' Deck)	0.25 cu. yds.
714-586	5" O.D. Arch (5'-6" to 6'-6" Deck)	0.25 cu. yds.

DESCRIPTION

Arches are designed to serve as deck posts in deck systems and some freestanding components.

MATERIALS

Arch: Arches shall be constructed of 5" tube, 11 ga.

Fasteners: The assembly shall contain Versalok Fasteners and Fastener Style A hardware.

Finishes: Arches and clamps shall be finished in Mira-Cote.

Product Specifications

MIRACLE RECREATION EQUIPMENT COMPANY

Kids' Choice® Tree-O™ Climber

714-605-3

Tree-O Climber for 3' Deck



714-605-4

Tree-O Climber for 4' Deck



714-605-5

Tree-O Climber for 5' Deck

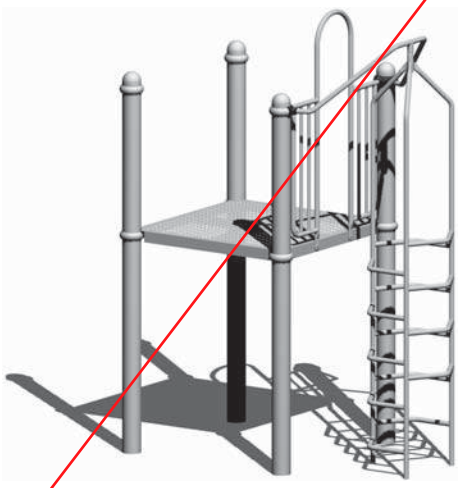

714-605-6

Tree-O Climber for 6' or 6'-6" Deck



Tree-O Climber

Kids' Choice®

Tree-O™ Climber

714-605-8

Tree-O Climber for 8' Deck

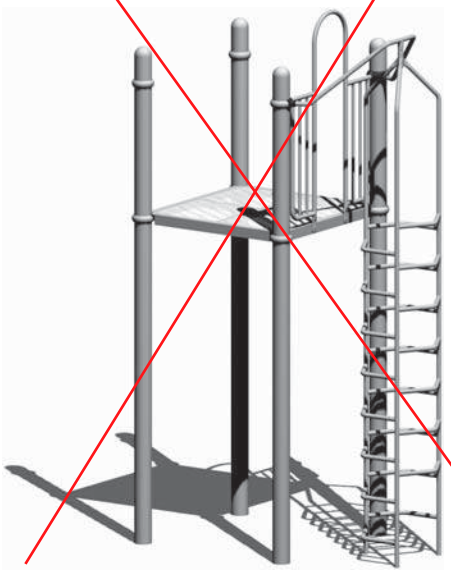

714-605-10

Tree-O Climber for 10' Deck

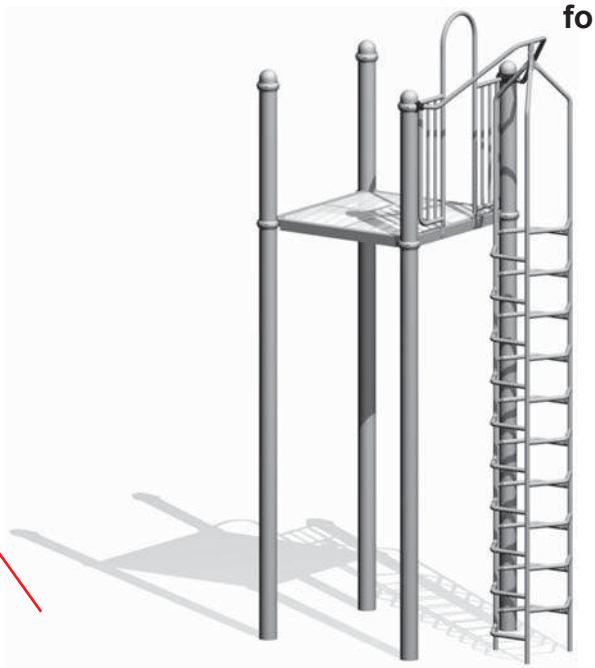

714-605-3, 714-605-4, 714-605-6, 714-605-8, 714-605-10

MIRACLE RECREATION EQUIPMENT COMPANY

Kids' Choice® Tree-O™ Climber

MODEL #	PRODUCT	PROT. AREA	GROUND SPACE	CONCRETE
714-605-3	Tree-O Climber for 3' Deck	15'-11 x 17'	4'-6" x 3'-4"	0.65 cu. yds.
714-605-4	Tree-O Climber for 4' Deck	15'-11 x 17'	4'-6" x 3'-4"	0.65 cu. yds.
714-605-5	Tree-O Climber for 5' Deck	15'-11 x 17'	4'-6" x 3'-4"	0.65 cu. yds.
714-605-6	Tree-O Climber for 6' or 6'-6" Deck	15'-11 x 17'	4'-6" x 3'-4"	0.65 cu. yds.
714-605-8	Tree-O Climber for 8' Deck	15'-11 x 17'	4'-6" x 3'-4"	0.65 cu. yds.
714-605-10	Tree-O Climber for 10' Deck	15'-11 x 17'	4'-6" x 3'-4"	0.65 cu. yds.

DESCRIPTION

The Tree-O Climber is a vertical climbing challenge featuring alternating, 60° rungs, rising to deck heights of 3', 4', 5', 6', 6'-6", 8' or 10', with arch enclosure.

MATERIALS

Climber: The Climber shall comprise 3 side rails, 60° rungs, an upper arm, and plastic pipe plug. The side rails shall be constructed of 1" pipe and shall be 175-3/16" in length. Rungs shall be constructed of 1" pipe and shall measure 19-9/16" in length. Upper arm shall consist of swaged tube constructed of 1-1/4" pipe.

Support Header: Support Header shall be composed of 1" pipe, solid welded to a support sleeve of 1-1/4" pipe, all solid welded.

Arch Enclosure: The arch enclosure shall comprise top supports and an arched upright of 1" pipe and spoked infill of 1" tube, all solid welded.

Fasteners: All models shall contain Fastener Style A hardware.

Consult Miracle's "Glossary of Technical Data for Materials, Processes & Finishes" for specifications of underlined items.

Product Specifications

MIRACLE RECREATION EQUIPMENT COMPANY

Kids' Choice®

Braided Climber

714-607-8

Braided Climber



Braided Climber

Kids' Choice®

Braided Climber

MODEL #	PRODUCT	PROTECTIVE AREA	GROUND SPACE	CONCRETE
714-607-8	Braided Climber	17'-3" x 15'	4'-6" x 2'-9"	0.09 cu. yds.

DESCRIPTION

The Braided Climber is a twisting, vertical climbing challenge rising to an 8' deck height with arch enclosure.

MATERIALS

Climber: The Climber shall comprise two uprights with coped plugs inserted into top ends, and eight rungs. The uprights and rungs shall be constructed of 1" pipe, Gator Grip. Uprights shall measure 174-1/16" in length and shall be solid welded to rungs.

Top Support: Top support shall be composed of 1" pipe, Gator Grip, solid welded.

Arch Enclosure: The arch enclosure shall comprise top supports and an arched upright of 1" pipe and spoked infill of 1" tube, all solid welded.

Fasteners: All models shall contain Fastener Style A hardware.

Kids' Choice®

Chunky Trekker

714-631
Chunky Trekker

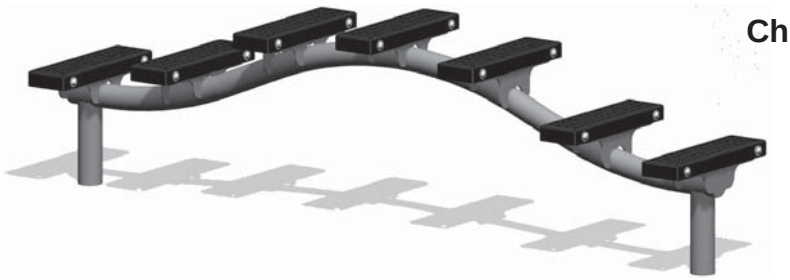

MODEL	PRODUCT	GRND SPACE	PROT. AREA	CONCRETE
714-631	Chunky Trekker	6'-4 1/4" x 1'-3"	19' x 14'	0.09 cu. yds.

DESCRIPTION

The Chunky Trekker is a simple yet versatile climbing component that can be used Deck-to-Deck, ground-to-Deck, freestanding, ground-to-Nexus or Nexus-to-Nexus.

MATERIALS

Chunky Trekker: The Chunky Trekker shall comprise a rail constructed of 2-3/8" tube, two 5" x 2-3/8" sleeves constructed of 2" pipe, and foot step brackets constructed of 7 ga sheet, all solid welded. Rail shall measure 75-1/2" in length. Brackets shall be graduated in height from 3-1/2", 4-1/8", 4-1/2" and 4-3/4". All brackets shall be 12-7/8" in length.

Legs: Legs shall have one swaged end, measure 54-3/16" in length and be constructed of 2" pipe.

Foot Step Covers: Foot step covers shall be constructed of 11 ga. sheet perforated with a staggered pattern of .375" diameter holes at 5/8" apart center to center. Steps shall be 15" in length.

Fasteners: Each assembly shall contain Versalok Fasteners and Fastener Style A hardware.

Finishes: The Chunky Trekker weldment and legs shall have a Mira-Cote finish. Foot step covers shall have a Mira-Therm finish.

Miracle Product Specifications

Kids' Choice®

Vortex Groove II® Slides

714-638-4U

4' Vortex Groove II Slide



714-638-5U

5' Vortex Groove II Slide



714-638-6U

6' & 6'-6" Vortex Groove II Slide

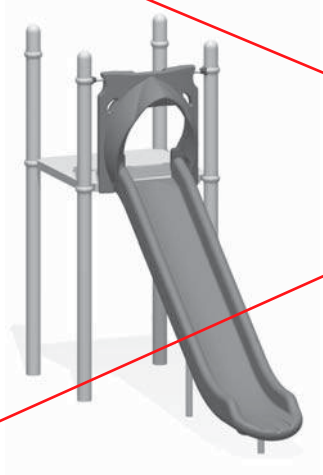

714-638-8U

8' VortexGroove II Slide



MODEL #	PRODUCT	GRND SPC.	PROT. AREA	CONCRETE
714-638-4U	4' Vortex Groove II Slide	2'-2" x 5'-9"	16' x 15'	.04 cu. yds.
714-638-5U	5' Vortex Groove II Slide	2'-2" x 7'-6"	20' x 15'	.04 cu. yds.
714-638-6U	6' & 6'-6" Vortex Groove II Slide	2'-2" x 10'-3"	24' x 15'	.08 cu. yds.
714-638-8U	8' Vortex Groove II Slide	2'-2" x 13'-1"	28' x 15'	.08 cu. yds.

DESCRIPTION

The Vortex Groove II Slides features a hooded canopy and a streamline slide design. Groove II is designed to exit from either a 4', 5', 6', 6'-6" or 8' Deck.

Kids' Choice®

Vortex Groove II® Slides

MATERIALS:

Slide: The canopy panel and one-piece slide shall be constructed of double wall Rockite. The slide shall have 6" high side rails, an overall width of 25", an 18" wide sliding surface and approximate 7' (714-638-4), 9' (714-638-5), 12' (714-638-6) and 15' (714-638-8) bedway length. The canopy panel shall be field mounted to deck and to post clamps via a 41-1/2" long rung constructed of 1" pipe.

Legs: The legs shall be 2" pipe, welded to an 11 ga. A-60 Galvannealed mounting bracket.

Fasteners: Each assembly shall contain Versalok Fasteners and Fastener Style A hardware.

Finishes: The rung, legs, and clamps shall have a Mira-Cote finish. The Rockite slide and canopy shall have molded-in color.

Product Specifications

Kids' Choice® - Mira-Therm™ II
VersaDeck



714-644-9
VersaDeck

MODEL #	PRODUCT	GRD SPACE	PROT. AREA	CONCRETE
714-644-9	VersaDeck	4'-1" x 1'-4"	16'-6' x 13'-10"	N/A

DESCRIPTION
VersaDeck is a 16" wide deck with enclosures that may be in used a variety of deck and/or transfer applications.

MATERIALS

Deck: Deck section shall be constructed with folded 11 ga. steel sheet forming 3" tall sides with 3/16" x 1-1/2" flat steel braces, all solid welded. Decking sheet shall be perforated with a staggered pattern of 3/8" diameter holes at 5/8" apart center-to-center. Deck shall measure 48" in length and 16" in width.

Enclosure: Enclosure shall comprise two outer uprights and a top rail, all solid welded. Uprights and top rail shall be constructed of 1" pipe, Gator Grip and uprights shall have mashed ends for deck attachment. Enclosure shall measure 40" in length and 9-1/2" in width.

Fasteners: The assembly shall contain Versalok Fasteners and Fastener Style A hardware.

Finishes: Deck shall be finished in Mira-Therm II. Enclosure shall be finished in Mira-Cote.

Product Specifications

Kids' Choice ®

Roller Slides

Model #	Product	Ground Space	Protective Area	Concrete
714-645-14	ROLLER SLIDE (4' DECK)	9'-10" x 3'-6"	22'-5" x 15'-4"	.09 cu yds
714-645-14BD	ROLLER SLIDE (4' DECK) BLT DN	9'-10" x 3'-6"	22'-5" x 15'-4"	N/A
714-645-15	ROLLER SLIDE (5' DECK)	12'-4" x 3'-6"	25' x 15'-4"	.09 cu yds
714-645-15BD	ROLLER SLIDE (5' DECK) BLT DN	12'-4" x 3'-6"	25' x 15'-4"	N/A
714-645-16	ROLLER SLIDE (6' DECK)	4' x 19'	16' x 31'	.09 cu yds
714-645-16BD	ROLLER SLIDE (6' DECK) BLT DN	4' x 19'	16' x 31'	N/A

Roller Slides

Kids' Choice ®

Roller Slides

714-645-14

Roller Slide, 4'

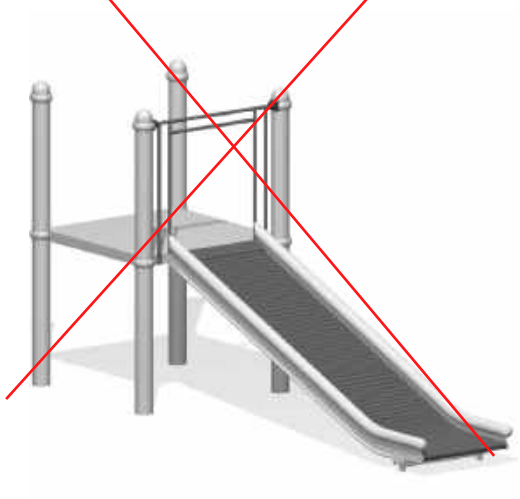

714-645-15

Roller Slide, 5'



714-645-16

Roller Slide, 6'



71464514, 71464514BD, 71464515, 71464515BD, 71464516, 71464516BD

Kids' Choice ®

Roller Slides

DESCRIPTION

The Roller Slides are available for either 4' or 5' or 6' deck heights.

MATERIALS

Slide	Slide will comprise an upper slide panel of 4.6 mm galvanized sheet, a side top cap rod of 3-1/2 x 13 ga. galvanized tube, a side end panel of 4.6 mm galvanized sheet, a side bottom cap rod of RDTB ILG 25.4 mm x 2.1 mm 14 ga., and rollers constructed of PE coated 2" aluminum tubing with nitrile bearings on stainless steel shafts.
Enclosure	The enclosure assembly shall consist of a rung, outer, inner, and L uprights, spacers, and a cross bar. Inner and L uprights, spacers, cross bar and spokes shall be constructed of 1" tube. Outer uprights and rungs shall be constructed of Gator Grip. Assembly shall be solid welded.
Slide Support	Support shall be constructed of RDTB ILG 42.2 mm x 3 mm and 4.6 mm galvanized sheet.
Versalok Fasteners	All Versalok Fasteners for deck and component attachment shall be aluminum alloy.
Fasteners	All hardware shall be Fastener Style A.
Finishes	The enclosures, legs, and Versalok Fasteners shall have a Mira-cote finish.

Consult Miracle's "Glossary of Technical Data for Materials, Processes & Finishes" for specifications of underlined items.

Kids' Choice®

Playcover® Sail Shades

714-669-617S Playcover
714-669-617SFR Playcover

Playcover Sail 17 FT



714-669-626S Playcover
714-669-626SFR Playcover

Playcover Sail 26 FT



MODEL	DESCRIPTION
714-669-617S	Playcover 17 FT Hex Sail F/KC HEX DK
714-669-617SFR	Playcover 17 FT Hex Sail F/KC HEX DK FR
714-669-626S	Playcover 26 FT Hex Sail F/KC HEX DK
714-669-626SFR	Playcover 26 FT Hex Sail F/KC HEX DK FR

DESCRIPTION

Playcover Sail Shades will attach to Kids' Choice decks to provide shade to play structures. All structures are designed to meet the requirements of ASCE 7-05 (IBC 2006, IBC 2009, CBC 2010), ASCE 7-10 (IBC 2012, IBC 2015, IBC 2018, CBC 2013, CBC 2016) and ASCE 7-16 (IBC 2018, CBC 2019). Shades will have a live load of 5 PSF, snow load of 10 PSF, nominal design wind speed of 90 MPH (3-sec gust), exposure C, risk category II (from ASCE 7-05) and ultimate design wind speed of 115 MPH, exposure C, risk category II (from ASCE 7-10 and ASCE 7-16).

Consult Miracle's "Glossary of Technical Data for Materials, Processes and Finishes" for specifications of underlined items.

Kids' Choice®

Playcover® Sail Shades

MATERIALS

Frame: All tube shall conform to ASTM A500. Steel plate shall conform to ASTM A572, Fy = 50 KSI. All fabrication and erection of structural steel shall conform with the current edition of AISC “Specification for the Design, Fabrication and Erection of Structural Steel for Buildings”. All fabrication and erection of the light gauge pipes shall conform to AISI cold-formed steel specifications. Steel welds shall conform to AWS D.1: Electrodes, Class E70XX, Low Hydrogen. Frames have primer and 3 mils of powder coat electrostatically applied. Structural Steel Columns are made of 88.9 mm (3.5") O.D. pre-galvanized tubing for PB and are made of 127 mm (5") O.D. pre-galvanized tubing for KB. Structural Steel Rafters are made of 88.9 mm (3.5") O.D. pre-galvanized tubing.

Shades: Fabric shade cloth has been specifically developed to produce a very strong and stable outdoor fabric for use in tension structures and shade awnings. This range offers the ultimate combination of maximum sun protection plus the strength and durability to ensure maintenance-free, long life performance. Mildew and Rot resistant. Heat and hail resistant. Maintains color in all weather conditions. High Density Polyethylene (HDPE), UV stabilized with a monofilament and lockstitch sewing construction producing a fabric that will not tear or fray if cut. Available in Standard and Fire Retardant Fabric. 6 Colors in Standard Fabric and 7 Colors in Fire Retardant Fabric. Provides shade factors up to 94% and blocks up to 95% of dangerous UV solar radiation for Standard Fabric. Provides shade factors up to 86% and blocks up to 84% of dangerous UV solar radiation for Fire Retardant Fabric. Temperature reduction of up to 30 degrees. It is recommended to remove Shade fabric prior to snowfall. Structural framing may remain in place during winter

Consult Miracle's "Glossary of Technical Data for Materials, Processes and Finishes" for specifications of underlined items.

Miracle Product Specifications

Kids' Choice®

Chameleon II Slide System

Chameleon II Slide (Sample)

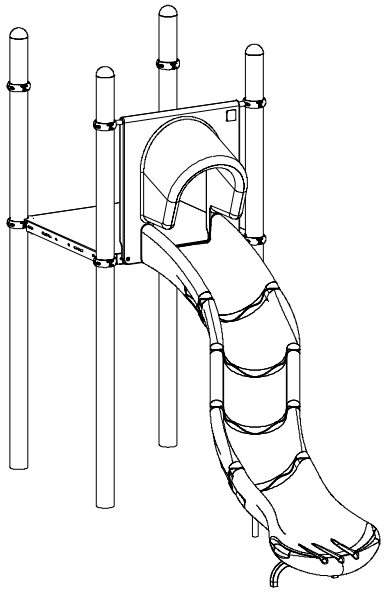

714-670,
714-670-1,
714-670-2,
714-670-4,
714-670-5,
714-670-6,
714-670-7

All Chameleon Slide systems contain one Model # 714-670 and up to seven additional pieces (determined by deck height) in any combination of remaining models (-5, -6, -7).

SECTIONAL SLIDE COMPONENTS

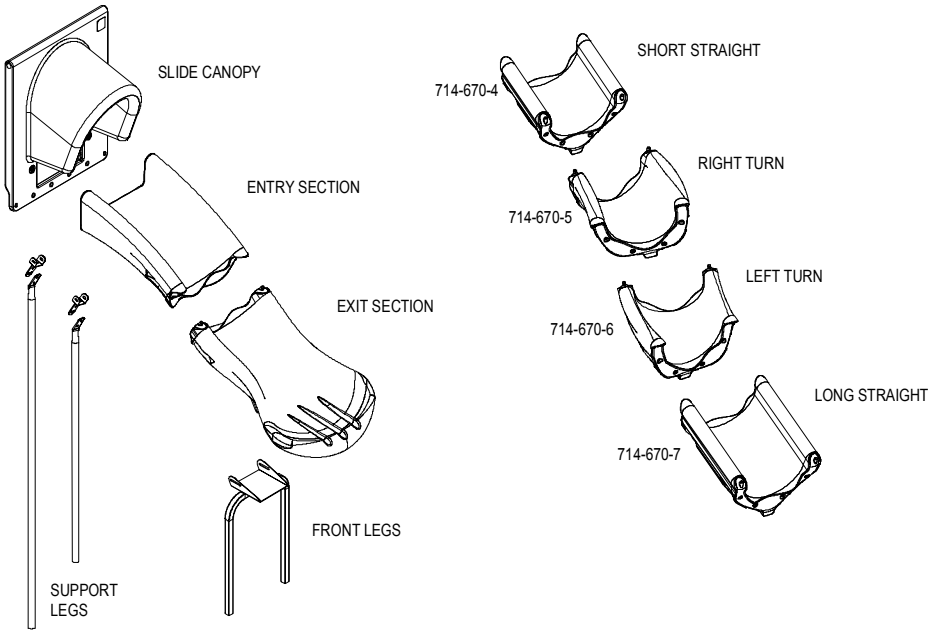

714-670; 30" TO 54" DECK HT; NO SUPPORT LEGS
714-670-1; 60" TO 78" DECK HT; ONE SHORT SUPPORT LEG
714-670-2; 84" TO 102" DECK HT; TWO SUPPORT LEGS

714-670, 714-670-1, 714-670-2, 714-670-4, 714-670-5, 714-670-6, 714-670-7

Chameleon Slide System

Kids' Choice®

Chameleon II Slide System

MODEL #	PRODUCT
714-670	Chameleon II Entry & Exit 2'-6" - 4'-6"
714-670-1	Chameleon II Entry & Exit 5' - 6'-6"
714-670-2	Chameleon II Entry & Exit 7' - 8'-6"
714-670-4	Chameleon II Short Straight Section
714-670-5	Chameleon II Right Section
714-670-6	Chameleon II Left Section
714-670-7	Chameleon II Long Straight Section

Note: Ground space and protective area required are dependent upon the specific configuration. Footings for the assembly require 0.05 cu. yds. of concrete for models attached to decks 3', 0.10 cu. yds. of concrete for models attached to decks 5' and 4', 0.15 cu. yds. of concrete for models attached to decks 6', 6'-6" and 8'.

DESCRIPTION

The Chameleon Slide System features interchangeable bedway sections to present maximum versatility in design configuration. The componentized, open bedway slide assembly may be attached to 2'-6" - 8'-6" decks.

MATERIALS

Slide Assembly:	The bedway sections, entry panel and exit section shall be constructed of double wall Rockite with a 18" bedway and 13-3/4" high sidewalls. The entry panel shall be supported by a rung of 1" pipe.
Front Leg:	The front leg shall be constructed of 1.5" X 16 ga. square tube and a bracket of 7 ga. galvanized sheet steel.
Support Legs:	Support legs shall be constructed of 1.66 OD x 13 ga. tube and a mounting bracket of 7 ga. sheet, solid welded.
Leg Bracket:	Shall be constructed of 7 ga. galvanized sheet steel, solid welded.
Fasteners:	The assembly shall contain Versalok Fasteners and Fastener Style A hardware.
Finishes:	The rung, front leg, support legs and leg brackets shall have a Mira-Cote finish. The Rockite slide sections shall have color molded in.

Consult Miracle's "Glossary of Technical Data for Materials, Processes & Finishes" for specifications of underlined items.

714-670, 714-670-1, 714-670-2, 714-670-4, 714-670-5, 714-670-6, 714-670-7

Kids' Choice®

Chameleon II Spiral Slide

714-670-8L

8' Chameleon II Spiral Slide, Left



714-670-8R

8' Chameleon II Spiral Slide, Right

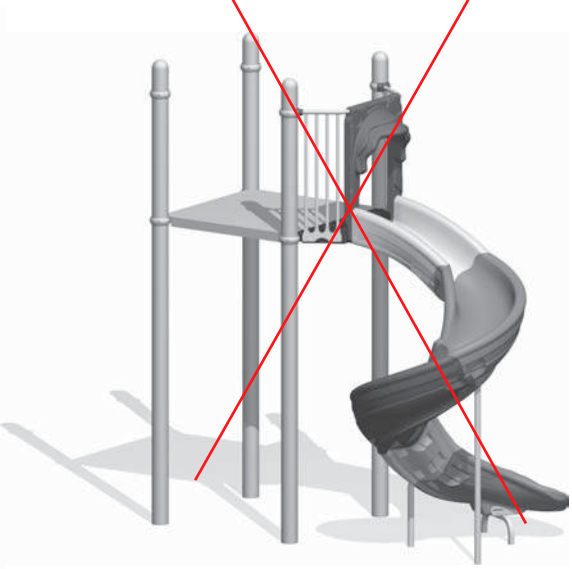

714-670-9L

9' Chameleon II Spiral Slide, Left

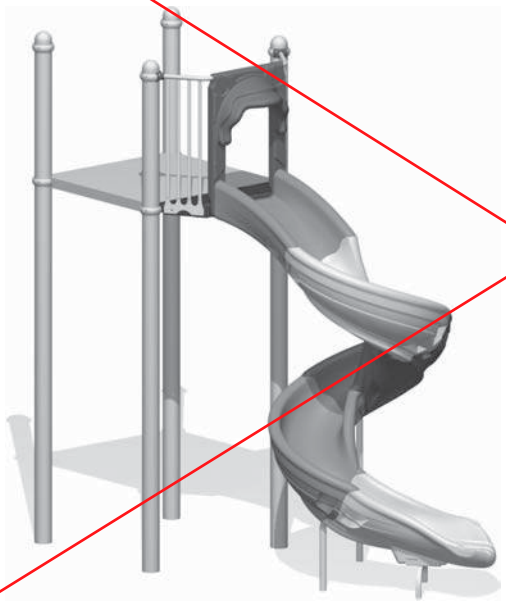

714-670-9R

9' Chameleon II Spiral Slide, Right

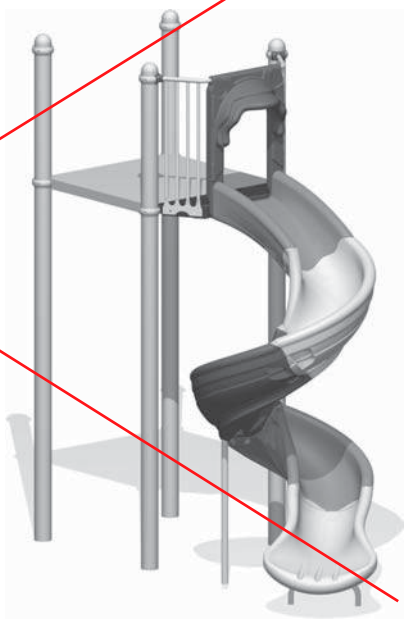

Kids' Choice®

Chameleon II Spiral Slide

MODEL #	PRODUCT	GROUND SPACE	PROT AREA	CONCRETE
714-670-8L	Chameleon Spiral Slide, 8', Left	6'-8" X 6'	21'-2" X 20'-2"	0.09 cu. yds.
714-670-8R	Chameleon Spiral Slide, 8', Right	6'-8" X 6'	21'-2" X 20'-2"	0.09 cu. yds.
714-670-9L	Chameleon Spiral Slide, 9', Left	7'-6" X 4'-6"	22'-1" X 20'-5"	0.09 cu. yds.
714-670-9R	Chameleon Spiral Slide, 9', Right	7'-6" X 4'-6"	22'-1" X 20'-5"	0.09 cu. yds.

DESCRIPTION

The Chameleon II Spiral Slide System features narrower canopy and bedway sections, and can be attached to 8' and 9' decks.

MATERIALS

Slide Assembly: The bedway sections, entry panel and exit section shall be constructed of double wall Rockite.

Enclosure: Enclosure shall be constructed of 3/4" x 1" x 15 ga tube and 3 mm galvanized sheet.

Front Leg: The front leg shall be constructed of 1.5" X 16 ga. square tube and a bracket of 7 ga. galvanized sheet steel.

Support Legs: Support legs shall be constructed of 1.66 OD x 13 ga. tube and a mounting bracket of 7 ga. sheet, solid welded.

Leg Bracket: Shall be constructed of 7 ga. galvanized sheet steel, solid welded.

Fasteners: The assembly shall contain Versalok Fasteners and Fastener Style A hardware.

Finishes: The rung, front leg, enclosure supports, support legs and leg brackets shall have a Mira-Cote finish. The Rockite slide sections shall have color molded in.

Consult Miracle's "Glossary of Technical Data for Materials, Processes & Finishes" for specifications of underlined items.

Miracle Product Specifications

Kids' Choice®

Chameleon II Vortex Slide System

Chameleon II Vortex Slide (Sample)



714-670U,
714-670-1U,
714-670-2U,
714-670-4,
714-670-5,
714-670-6,
714-670-7

All Chameleon Slide systems contain one Model # 714-670U and up to seven additional pieces (determined by deck height) in any combination of remaining models (-5, -6, -7).

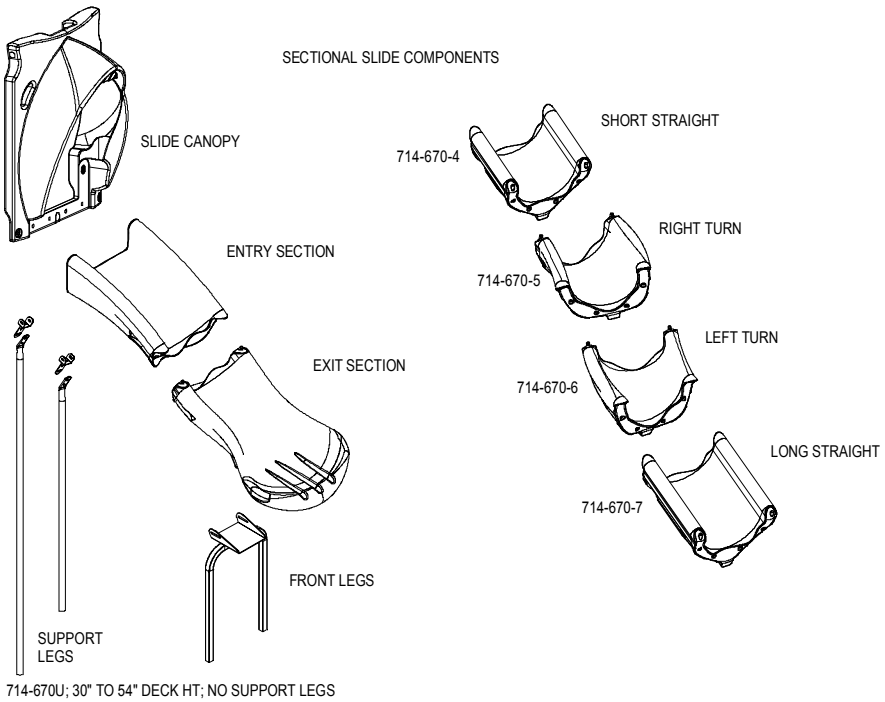

714-670U; 30" TO 54" DECK HT; NO SUPPORT LEGS
714-670-1U; 60" TO 78" DECK HT; ONE SHORT SUPPORT LEG
714-670-2U; 84" TO 102" DECK HT; TWO SUPPORT LEGS

Kids' Choice®

Chameleon II Vortex Slide System

MODEL #	PRODUCT
714-670U	Chameleon II Vortex Entry & Exit 2'-6" - 4'-6"
714-670-1U	Chameleon II Vortex Entry & Exit 5' - 6'-6"
714-670-2U	Chameleon II Vortex Entry & Exit 7' - 8'-6"
714-670-4	Chameleon II Short Straight Section
714-670-5	Chameleon II Right Section
714-670-6	Chameleon II Left Section
714-670-7	Chameleon II Long Straight Section

Note: Ground space and protective area required are dependent upon the specific configuration. Footings for the assembly require 0.05 cu. yds. of concrete for models attached to decks 3', 0.10 cu. yds. of concrete for models attached to decks 5' and 4', 0.15 cu. yds. of concrete for models attached to decks 6', 6'-6" and 8'.

DESCRIPTION

The Chameleon Slide System features interchangeable bedway sections to present maximum versatility in design configuration. The componentized, open bedway slide assembly may be attached to 2'-6" - 8'-6" decks.

MATERIALS

Slide Assembly: The bedway sections, entry panel and exit section shall be constructed of double wall Rockite with a 18" bedway and 13-3/4" high sidewalls. The entry panel shall be supported by a rung of 1" pipe.

Front Leg: The front leg shall be constructed of 1.5" X 16 ga. square tube and a bracket of 7 ga. galvanized sheet steel.

Support Legs: Support legs shall be constructed of 1.66 OD x 13 ga. tube and a mounting bracket of 7 ga. sheet, solid welded.

Leg Bracket: Shall be constructed of 7 ga. galvanized sheet steel, solid welded.

Fasteners: The assembly shall contain Versalok Fasteners and Fastener Style A hardware.

Finishes: The rung, front leg, support legs and leg brackets shall have a Mira-Cote finish. The Rockite slide sections shall have color molded in.

Consult Miracle's "Glossary of Technical Data for Materials, Processes & Finishes" for specifications of underlined items.

Alta Glide Flex Link to KC (1' Deck)

714-686-10

Alta Glide Flex Link to KC - (1' Deck)

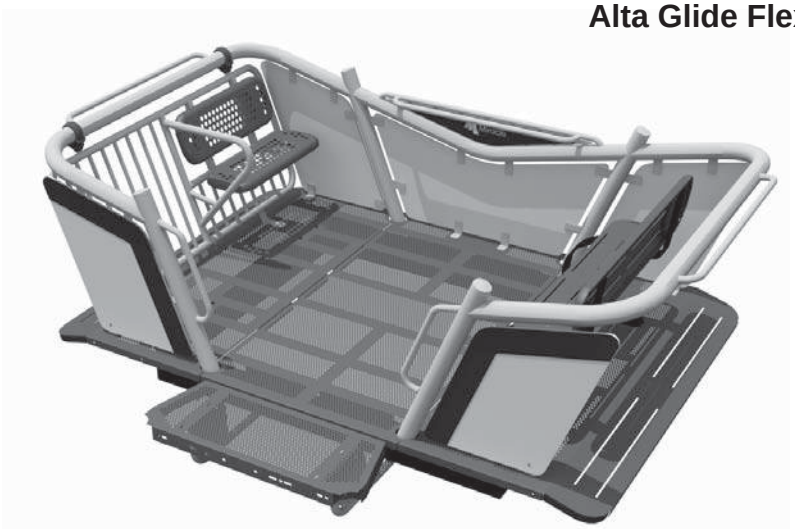

MODEL	PRODUCT	GRND. SPACE	PROT. AREA	CONCRETE
686 -10	Alta Glide Flex Link to KC (1' Deck)	11'-8" x 7'-1"	21' x 25'	0.78 cu yds.

DESCRIPTION:

Alta Glide Flex Link to KC (1' Deck) is a swaying, wheelchair-accessible glider.

MATERIALS:

Alta Glide Mechanism: Mechanism shall comprise a shaft weldment constructed of 18-8 stainless steel; rubber flex axles, bearings constructed of McMaster Carr part #5968K75 or equivalent; lock collars constructed of A283 steel grade C; guide blocks constructed of MDS filled nylon; wheels constructed of McMaster Carr part #9949T77 or equivalent.

Base: Base shall comprise gussets and base ground and vertical plates constructed of 3/8" plate; channels constructed of 6" x 13 #ASTM A-36; adaptor plate constructed of 7GA. sheet; carriage containment brackets, guides and gusses constructed of 3/8" plate; base tubes constructed of SQTB HR 51 x 51 x 3; carriage tubes constructed of SQTB HR 51 x 51 x 3; mounting brackets constructed of SHST GAL 4.5 mm; flex axle holders and keepers constructed of 3/8" plate; gusset carriages and swing arms constructed of 1/2" HR ASTM A-36; arm stops constructed of 3/8" plates with an anchor head pin constructed of bar round .50" DIA ASTM A-36.

Frame: Frame halves shall comprise tabs and half joiners constructed of SHST GAL 4.5 mm; rocker plates constructed of 3/8" plate; spacers constructed of 1.5" x 12GA.; spacer weldnuts, seat mount braces, end braces, skirt runners and main runners constructed of SQTB ILG 1.5" x 12GA.

Tabs: Tabs shall be constructed of SHST GAL 4.6 mm.

Consult Miracle's "Glossary of Technical Data for Materials, Processes and Finishes" for specifications of underlined items.

Alta Glide Flex Link to KC (1' Deck)

MATERIALS cont.:

Decks:	Decks shall be constructed of SHST HR 2.3 mm.
Bench Seats:	Bench seats shall be constructed of SHST HR 2.3 mm.
34" Heritage Seat:	Seat shall be constructed from 13GA. hot rolled pickled in oil sheet steel and coated per PPLT PVC Specification.
"C" Spring:	"C" springs shall be constructed of 1/2" spring steel.
Bench Back Brace:	Back brace shall be constructed of plate HR 3/8".
Outer Frame:	Frame shall comprise aluminum 3.5" post caps, entry and rear handles constructed of RDTB ILG 33.4 mm x 3 mm, swage sleeves, rear posts, front posts and upper rails constructed of RDTB ILG 88.9 mm x 3 mm.
Outer Frame Middle:	Outer frame middle shall comprise tabs constructed of 4.5 mm ga. sheet, handhold fillers constructed of 2.3 mm ga. sheet, handholds and middle handle constructed of RDTB ILG 33.4 mm x 3 mm, and middle joiner constructed of RDTB ILG 88.9 mm x 3 mm.
Parking Spot Frame Weldment:	Frame shall comprise stub and arm rest brace constructed of RDTB ILG 33.4 x 3.0 (6100); edge half, middle vertical tube, horizontal tube, arm rest and sleeve for 42.2 13GA tube constructed of tube 1.660 OD x 13GA Galv x 22'; long and short vertical tube constructed of tube oval .750 x 1.00 x 15GA Galv x 20'; seat back, seat tube and front tube constructed of 1.500 x 1.500 x 12GA Galv x 24'; seat bracket, frame assembly easel and anchor plate constructed of sheet 7GA x 48 x 120 Galv G90.
Walls:	Walls shall be constructed of sheet HDPE 1/2".
Miracle Panel:	Panel shall be constructed of SHST GAL 3 mm.
Wall Trim:	Wall trim shall be constructed of SHST GAL 2.3 mm.
Skirts:	Skirts shall be constructed of sheet HDPE 1/2". Skirt corners shall be constructed of SHST GAL 4.5 mm.
Legs:	Legs shall be constructed of RDTB ILG 88.9 x 3 and a mounting plate constructed of 3/8" plate.
Deck Brace:	Deck braces shall comprise a brace plate constructed of 3 mm GA. sheet and deck braces constructed of RDTB ILG 42.2 mm x 3 mm.
Transfer Deck:	Transfer deck shall comprise tabs constructed of 7GA. black sheet, deck corners constructed of 7GA. sheet x 48 x 120 black HR CQ, and deck constructed of sheet HR3 mm.

Consult Miracle's "Glossary of Technical Data for Materials, Processes and Finishes" for specifications of underlined items.

Alta Glide Flex Link to KC (1' Deck)

MATERIALS cont.:

Posts:	Posts shall be constructed of 3-1/2" tube with a 3-1/2" post cap pressed into the top end.
Finishes:	Decks, transfer Deck and bench seats shall be Mira-Cote. Wall trim and frames shall be Mira-Therm. Panels shall be gray Mira-Lene. C-Springs shall be black.

Consult Miracle's "Glossary of Technical Data for Materials, Processes and Finishes" for specifications of underlined items.

Kids Choice®

Ground to Deck Dome Climber with Orbs - 5' and 6'-6"

714-691-5

Ground to Deck Dome Climber with Orbs - 5'



714-691-6

Ground to Deck Dome Climber with Orbs - 6'-6"

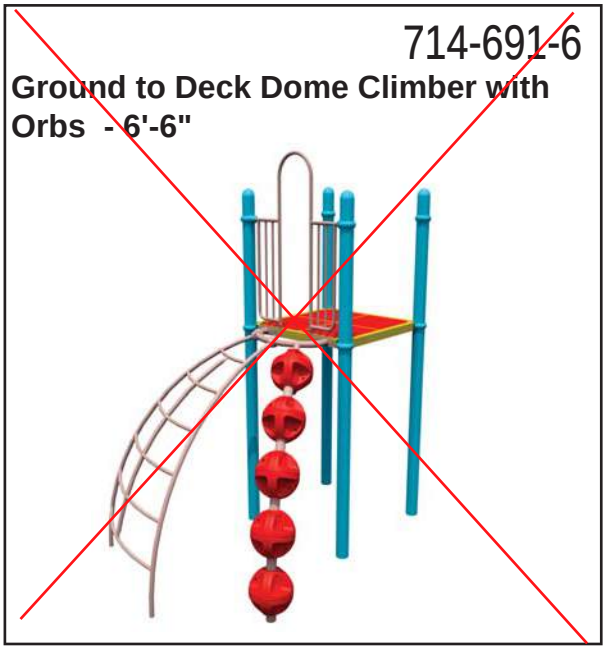

Note: Deck is not included in this model. Deck is shown for installation purposes only!

MODEL	PRODUCT	GROUND SPACE	CONCRETE
714-691-5	Ground to Deck Dome Climber with Orbs - 5'	18'-2" x 20'	0.3 cu. yds.
714-691-6	Ground to Deck Dome Climber with Orbs - 6'-6"	18'-2" x 19'-9"	0.3 cu. yds.

DESCRIPTION:

The Ground to Deck Dome Climber with Orbs is comprised of a dome climber and one (1) dome arm with orbs for ascending to a deck.

MATERIALS:

Orb Arm Weldment: The orb arm weldment shall be constructed of 3.5" dia. 11Ga tubing and 2-3/8" 12Ga tubing, 3/8" thick and 7 Ga steel plate solid welded.

Hub Ring: The hub ring shall be constructed of 2-3/8" dia. 12Ga tubing and 7Ga plate solid welded.

Dome Sections: The dome sections shall be constructed of 1-5/8" dia. 11Ga and 1-5/16" dia. 14Ga Ga-tor Grip tubing and steel threaded inserts solid welded.

Castings: The castings shall be constructed of cast 319 aluminum.

Hardware: All hardware is Fastener Style A.

Orbs: The orbs shall be constructed of Rotomolded plastic, LDPE

Finish: The climbers shall have a Mira-Cote finish.

Consult the Glossary of Technical Data for Materials, Processes and Finishes of the Underlined Items.

Upstop, Terrain, Inversion, Shuttle Climbers

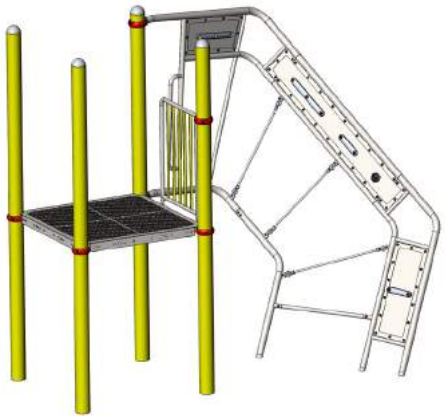

71469225, 71869225, 70469225
UPSTOP CLIMBER

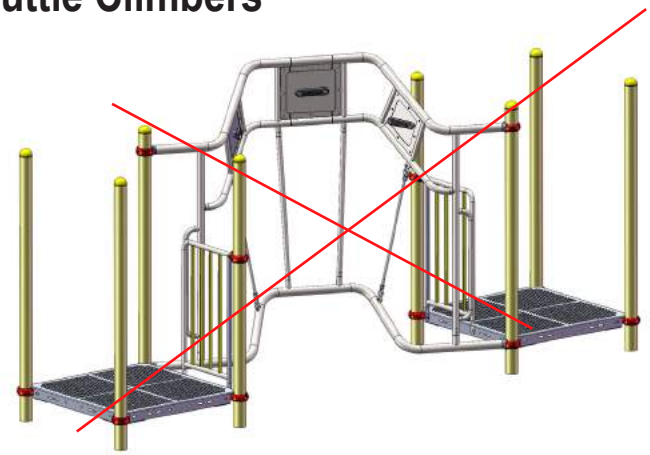

7146923, 7186923, 7046923
TERRAIN CLIMBER

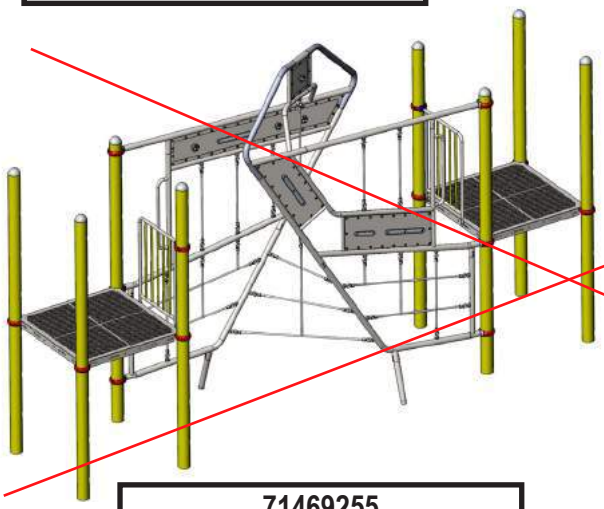

71469255
INVERSION CLIMBER



71469214, 71869214, 70469214
SHUTTLE CLIMBER

Model #	*Product*	*Protective Area*	*Ground Space*	*Concrete*
71469225	Upstop Climber KC	19' x 18'	7' x 8'	0.50 cu.yds.
71869225	Upstop Climber TC	19' x 18'	7' x 8'	0.50 cu.yds.
70469225	Upstop Climber TCX	19' x 18'	7' x 8'	0.50 cu.yds.
7146923	Terrain Climber KC	16' x 20'	4' x 8'	See Post Specs
7186923	Terrain Climber TC	16' x 20'	4' x 8'	See Post Specs
7046923	Terrain Climber TCX	16' x 20'	4' x 8'	See Post Specs
71469255	Inversion Climber KC	16' x 24'	4' x 12'	0.20 cu.yds.
71469214	Shuttle Climber KC	16' x 16'	4' x 4'	See Post Specs
71869214	Shuttle Climber TC	16' x 16'	4' x 4'	See Post Specs
70469214	Shuttle Climber TCX	16' x 16'	4' x 4'	See Post Specs

Upstop, Terrain, Inversion, Shuttle Climbers

UPSTOP CLIMBER DESCRIPTION

The Upstop Climber is a challenging climber with sturdy ropes and handholds that allow children to practice balance while increasing upper and lower body strength. The climber is designed to attach to a deck.

TERRAIN CLIMBER DESCRIPTION

The Terrain Climber is a challenging climber with sturdy ropes and handholds that allow children to practice balance while increasing upper and lower body strength. The climber is designed to attach in between decks.

INVERSION CLIMBER DESCRIPTION

The Inversion Climber is a challenging climber with sturdy ropes and handholds that allow children to practice balance while increasing upper and lower body strength. The climber is designed to attach in between decks.

SHUTTLE CLIMBER DESCRIPTION

The Shuttle Climber is a challenging climber with sturdy ropes that allow children to practice balance while increasing upper and lower body strength. The climber is designed to attach to a deck.

MATERIALS

Frame	Frame shall be constructed of 2-3/8” 12-gauge tubing, 1.9” 11-gauge tubing, and 1” pipe. The panel frame plate shall be constructed of 7-gauge sheet steel. The rope blocks shall be made from mild steel. All solid welded.
Panels	Panels shall be made from 11-gauge sheet steel.
Handholds	Handholds shall be cast alloyed aluminum.
Crossbars	Shall be constructed of 1” pipe.
Ropes	Shall be constructed of 16mm diameter, steel reinforced nylon braided rope with a galvanized foundation steelwork.
Fasteners	Shall contain Versalok Fasteners and Fastener Style A hardware.
Finishes	The frame, panels, handholds, crossbars, and clamps shall have a Mira-Cote finish.

Consult Miracle's "Glossary of Technical Data for Materials, Processes & Finishes" for specifications of underlined items.

Kids' Choice®

Sensory Panels - Above Deck

714-713-11

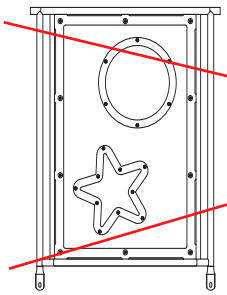

714-713-12

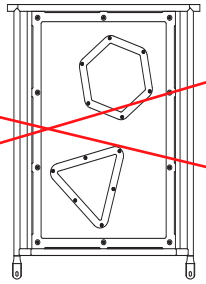

714-713-13

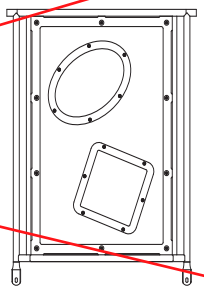

714-713-14

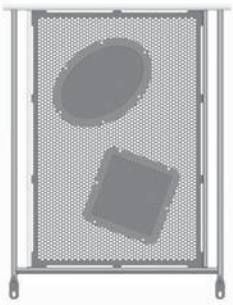

714-713-15

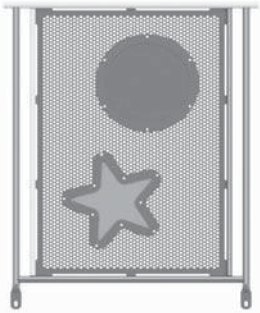

714-713-16

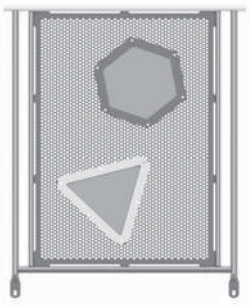

Models included:

MODEL	DESCRIPTION
714-713-11	Sensory Panel Textured Star Circle
714-713-12	Sensory Panel Textured Triangle Hexagon
714-713-13	Sensory Panel Textured Square Oval
714-713-14	KC Above Deck Oval/Square Perf. Panel
714-713-15	KC Above Deck Star/Circle Perf. Panel
714-713-16	KC Above Deck Hex/Triangle Perf. Panel

DESCRIPTION

These representational sensory panels, designed to enhance imagination and creative play, may be free-standing, clustered or above deck.

Consult Miracle's "Glossary of Technical Data for Materials, Processes & Finishes" for specifications of underlined items.

Sensory Panels

Kids' Choice®

Sensory Panels - Above Deck

MATERIALS

Panels: The panel shall consist of a border plastic, plastic shape inserts and shape flanges all joined by double sided rivets.

Rivets: The rivets shall be aluminum.

Border Plastic: The border plastic shall be constructed of translucent colored polycarbonate.

Insert Plastic: The insert plastic shall be constructed of translucent, colored and textured plastic.

Shape Flanges: The shape flanges shall be constructed of 11ga. sheet steel flange

Frame: The frame shall be constructed of Gator Grip; 1" round tube and a 13ga. sheet steel flange. All solid welded.

Perforated Panel: The perforated panel shall be constructed of 11ga. galvanized sheet.

Fasteners:

Each assembly shall contain Versalok Fasteners and Fastener Style A hardware.

Finishes:

The frame and shape frames shall have a Mira-Cote finish.

Consult Miracle's "Glossary of Technical Data for Materials, Processes & Finishes" for specifications of underlined items.

714-713-11, 714-713-12, 714-713-13, 714-713-14, 714-713-15, 714-713-16

Kids' Choice ®

Best Buddies & Communication Panels

Model #	Product
71471326	BEST BUDDIES PANEL KC ABOVE DECK
71471326B	BEST BUDDIES PANEL KC BELOW DECK
71471327	BEST BUDDIES DBL PANEL KC ABOVE DECK
71471327B	BEST BUDDIES DBL PANEL KC BELOW DECK
71471328	MREC COMMUNICATION PANEL KC ABOVE DECK
71471328B	MREC COMMUNICATION PANEL KC BELOW DECK

DESCRIPTION

Best Buddies: An Informative panel with information about "Best Buddies International" and the "Five Mission Pillars" that they promote.

Communication: An informative panel that helps individuals communicate by using sight and pointing at a picture on the panel.

Consult Miracle's "Glossary of Technical Data for Materials, Processes & Finishes" for specifications of underlined items.

Best Buddies & Communication Panels

71471326, 71471326B, 71471327, 71471327B, 71471328, 71471328B

Kids' Choice ®

Best Buddies & Communication Panels

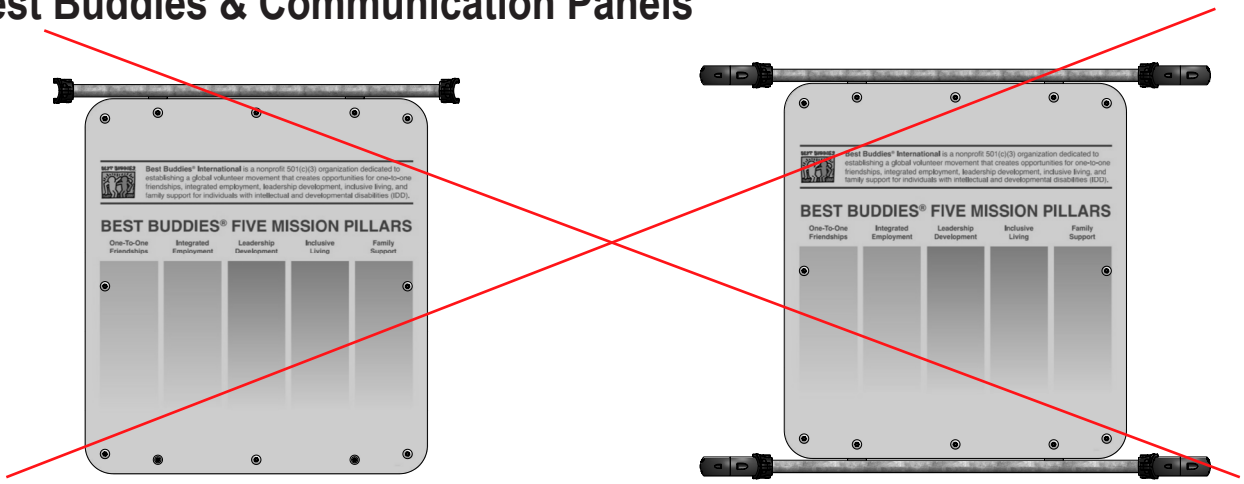

71471326
BEST BUDDIES PANEL KC ABOVE DECK

71471326B
BEST BUDDIES PANEL KC BELOW DECK

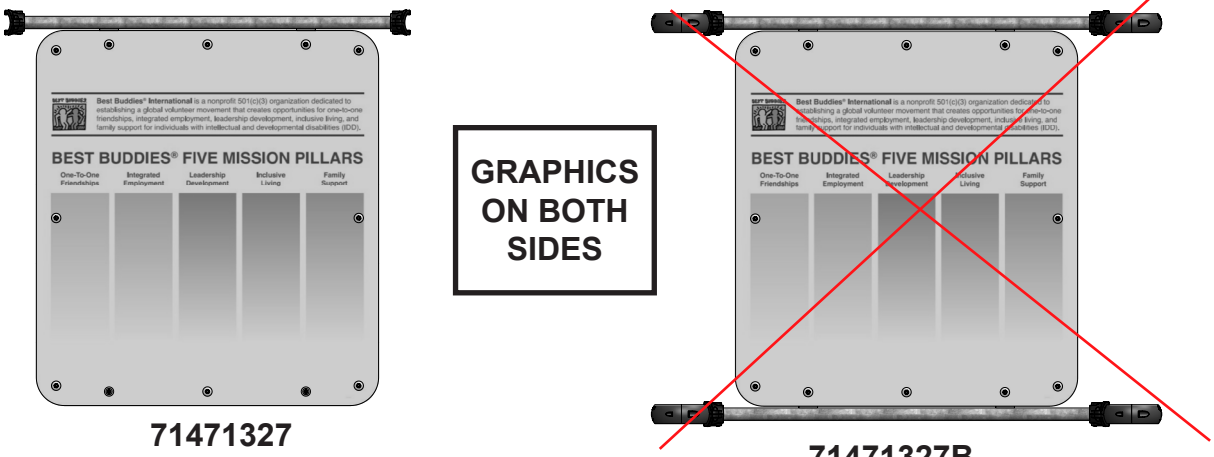

GRAPHICS ON BOTH SIDES

71471327
BEST BUDDIES DBL PANEL KC ABOVE DECK

71471327B
BEST BUDDIES DBL PANEL KC BELOW DECK

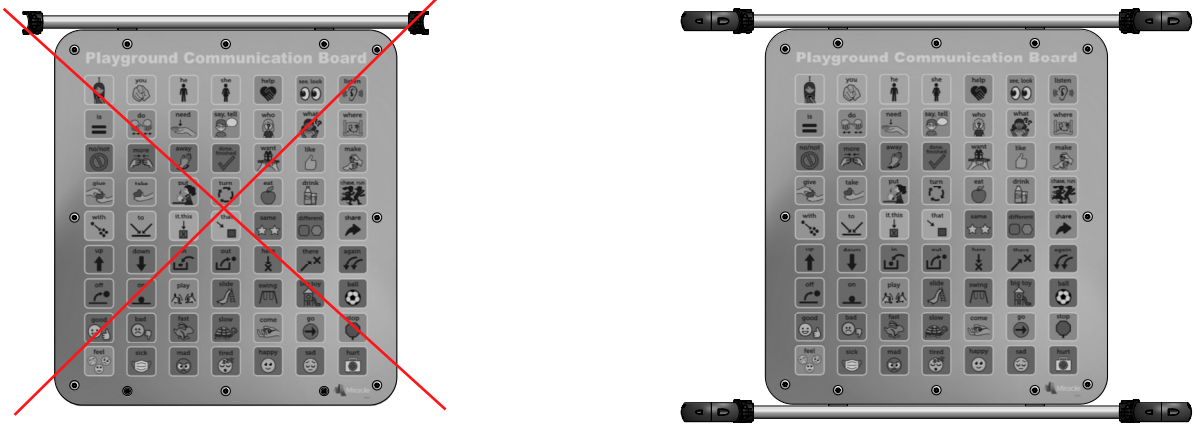

71471328
MREC COMMUNICATION PANEL KC ABOVE DECK

71471328B
MREC COMMUNICATION PANEL KC BELOW DECK

Kids' Choice ®

Best Buddies & Communication Panels

MATERIALS

Panels	The panels shall be 2 mm (.09”) fiberglass embedded signs that sit atop Mira-Lene with all corners rounded. Panels shall measure 36-1/2" x 40". The panels shall be supported between posts by top and bottom rungs of 1" pipe, each with two tabs of 11 ga. A-60 Galvannealed sheet, solid welded.
Fasteners	Each assembly shall contain Versalok Fasteners and Fastener Style A hardware.
Sign Posts	Signposts each shall be constructed of 5" tube with tabs of 11 ga. A-60 Galvannealed sheet solid welded and a 5" round end cap pressed in its top end.

Consult Miracle's "Glossary of Technical Data for Materials, Processes & Finishes" for specifications of underlined items.

71471326, 71471326B, 71471327, 71471327B, 71471328, 71471328B

Miracle **Product Specifications**

Kids' Choice®

Imagination Panels & Activity Panels

Models included :

MODEL	DESCRIPTION
714-617	Space Ship Panel
714-713-21	Space Maze Panel KC
714-713-22	Alphabet Panel KC
714-713-23	Braille Panel KC
714-713-24	Sign Language Phrases Panel KC
714-713-25	Sign Language Alphabet Panel KC
714-714-2	Fire Truck Panel
714-714-4	Train Panel
714-714-11	4 X 4 Panel KC
714-714-12	Big Rig Panel KC
714-714-13	Plane Panel KC
714-715-3	Jump Panel (3' Deck)
714-715-5	Jump Panel (5' Deck)
714-715-13	Calypso 3-Drum Panel
714-715-20	Activity Panel Frame
714-715-25	Museum Mosaic Disk Panel KC
714-715-26	Museum Opt Illusion Panel KC
714-715-27	Museum Pin Panel KC
714-715-28	Museum Washer Panel KC
714-715-29	Museum Zoetrope KC
714-732	Welcome Panel (5-12)
714-732-1	Welcome Panel (2-5)
714-732-2	Welcome Panel (2-12)
714-761-2	Piston Panel
714-761-3	Gear Panel
714-761-4	Sliding Tile Panel
714-895-1	Barn Wall Panel
714-895-3	Barn Window Panel

Note: Deck systems are NOT included in these assemblies. Please refer to Construction Drawings for the model particular to your system.

Consult Miracle's "Glossary of Technical Data for Materials, Processes & Finishes" for specifications of underlined items.

Imagination Panels & Activity Panels

Kids' Choice®

Imagination Panels & Activity Panels

714-617: Space Ship Panel

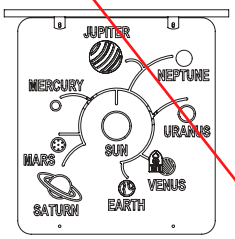

714-713-21: Space Maze Panel KC

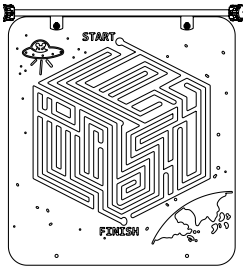

714-713-22: Alphabet Panel KC

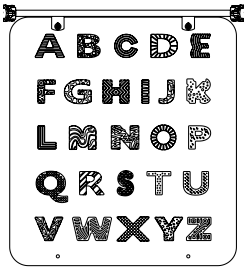

714-713-23: Braille Panel KC

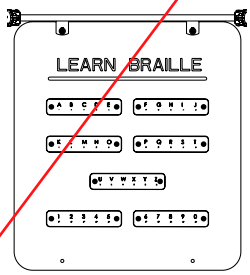

714-713-24: Sign Language Phrases Panel KC

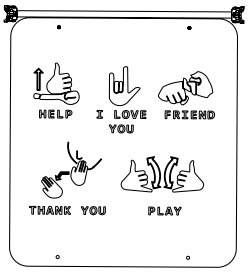

714-713-25: Sign Language Alphabet Panel KC

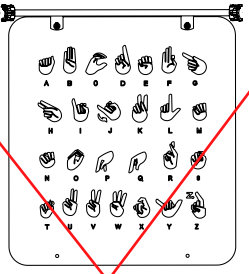

714-714-2: Fire Truck Panel

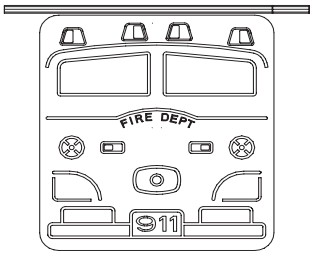

714-714-4: Train Panel

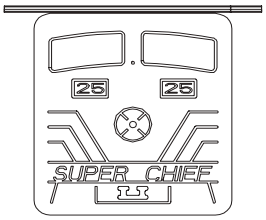

714-714-11: 4 X 4 Panel KC

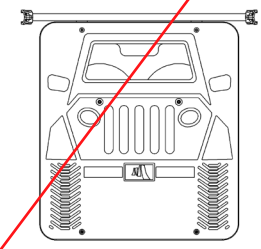

714-714-12: Big Rig Panel KC

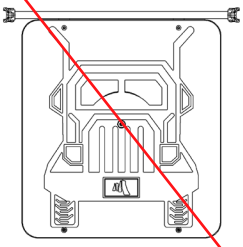

714-714-13: Plane Panel KC

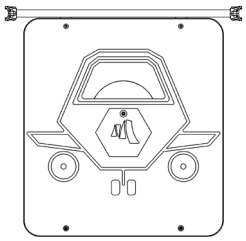

714-715-3: Jump Panel (3' Deck)

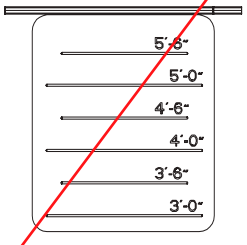

714-715-5: Jump Panel (5' Deck)

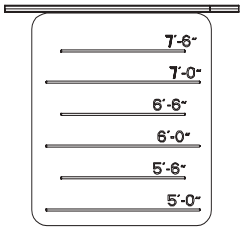

714-715-13: Calypso 3-Drum Panel

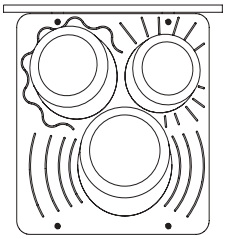

714-715-20: Activity Panel Frame

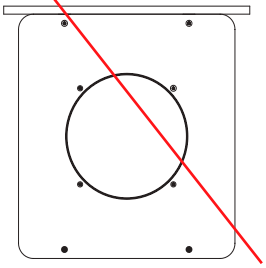

Top Views and Footing Layouts not shown. These models mount vertically on deck systems.

714-617, 714-714-2, 714-714-4, 714-715-3, 714-715-5, 714-715-13, 714-715-20, 714-732, 714-732-1, 714-732-2, 714-761-2, 714-761-3, 714-761-4, 714-895-1, 714-895-3, 714-714-11, 714-714-12, 714-714-13, 714-715-25, 714-715-26, 714-715-27, 714-715-28, 714-715-29, 714-713-21, 714-713-22, 714-713-23, 714-713-24, 714-713-25

Kids' Choice®

Imagination Panels & Activity Panels

714-715-25: Museum Mosaic Disk Panel KC

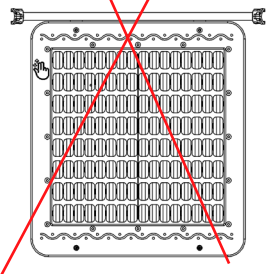

714-715-26: Museum Opt Illusion Panel KC

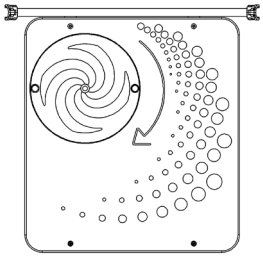

714-715-27: Museum Pin Panel KC

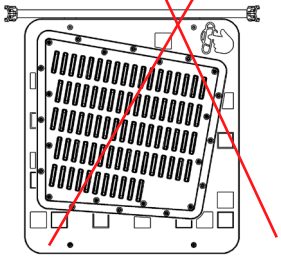

714-715-28: Museum Washer Panel KC

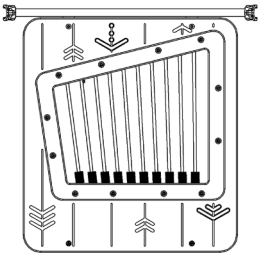

714-715-29: Museum Zoetrope KC

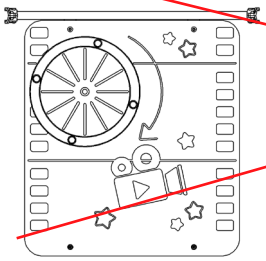

714-732: Welcome Panel (5-12)



714-732-1: Welcome Panel (2-5)



714-732-2: Welcome Panel (2-12)



714-761-2: Piston Panel

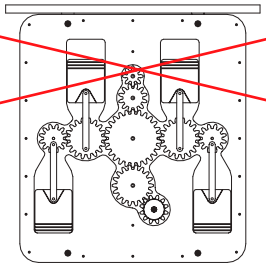

714-761-3: Gear Panel

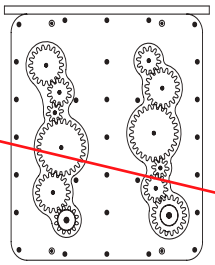

714-761-4: Sliding Tile Panel

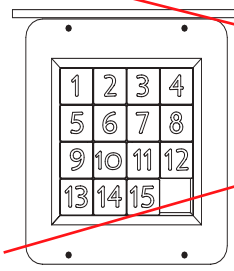

714-895-1: Barn Wall Panel

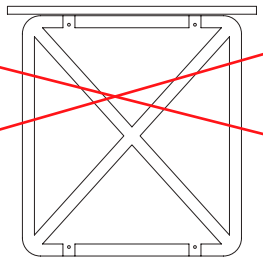

714-895-3: Barn Window Panel

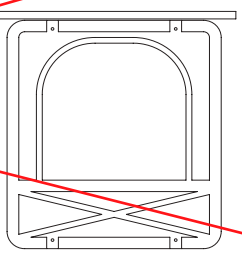

Top Views and Footing Layouts not shown. These models mount vertically on Deck systems.

714-617, 714-714-2, 714-714-4, 714-715-3, 714-715-5, 714-715-13, 714-715-20, 714-732, 714-732-1, 714-732-2, 714-761-2, 714-761-3, 714-761-4, 714-895-1, 714-895-3, 714-714-11, 714-714-12, 714-714-13, 714-715-25, 714-715-26, 714-715-27, 714-715-28, 714-715-29, 714-713-21, 714-713-22, 714-713-23, 714-713-24, 714-713-25

Kids' Choice®

Imagination Panels & Activity Panels

DESCRIPTION

These deck-mounting representational activity panels are designed to enhance imagination and creative play.

- Welcome panels are decorative and display the intended user age range.
- Vehicle-themed panels feature steering wheel assemblies.
- The Piston Panel and Gear Panel contain dynamic, user-driven parts sealed behind a transparent, tamper-resistant cover.
- The Sliding Tile Panel contains 15 routed, moveable tiles with one empty space challenging users to shift the tiles into proper sequence.
- The Calypso 3-Drum Panel allows musical expression, that may be struck with the hands to create different sounds.

MATERIALS

Panels:	The panels shall be constructed of Mira-Lene with all corners rounded. Panels shall measure 36-1/2" x 40".
Gear Panel and Piston Panel: Model 714-761-3, 714-761-2 only	In addition to the above materials and specifications, Model 714-761-3 shall contain a clear polycarbonate cover mechanically fastened over two side-by-side sets of 1/4" thick gears, to be constructed of high-density polyethylene, which shall turn on nylon bushings, except for black nylon handles and drive gears which shall turn on bronze bushings. Its opposite side shall contain side-by-side routed finger mazes. Model 714-761-2 shall contain a cover, gears, and knob as described herein, and connecting rod and piston shapes of 1/4" thick high-density polyethylene as well. Its opposite side shall contain routed designs.
Sliding Tile Panel: Model 714-761-4 only	In addition to material and specifications detailed in "panels" paragraph above, Model 714-761-4 shall contain 15 moveable, tongue-and-groove tiles with routed numerals constructed of 1/4" thick high-density polyethylene.
Calypso 3-Drum Panel: Model 714-715-13 only	In addition to material and specifications detailed in "panels" paragraph above, Model 714-715-13 shall contain 3 rotational molded drums of low density polyethylene resin. Each drum is attached to the panel through a cover plate constructed of 11 ga. galvanized steel sheet with a Mira-Cote finish.
Museum Pin Panel KC: 714-715-27 only	In addition to material and specifications detailed in “panels” paragraph above, model 714-715-27 shall contain polystyrene high impact static cylinders in red and blue and ½” stainless steel rods.
Museum Washer Panel KC: 714-715-28 only	In addition to material and specifications detailed in “panels” paragraph above, model 714-715-28 shall contain ½” stainless steel acme threaded rod.
Braille Panel KC: 714-713-23 only	In addition to material and specifications detailed in “panels” paragraph above, model 714-713-23 shall contain 3/32" lexan.

Consult Miracle's "Glossary of Technical Data for Materials, Processes & Finishes" for specifications of underlined items.

Kids' Choice®

Imagination Panels & Activity Panels

MATERIALS ***(continued)***

Museum Zoetrope KC: 714-715-29 only	In addition to material and specifications detailed in "panels" paragraph above, model 714-715-29 shall contain the weldment for the spinner event which shall be constructed of SHST HR 4.5mm (7 ga.) and 1215 steel.
Rung Bracket:	The rung brackets shall be constructed of 1" pipe with bolting tabs of 11 ga. A-60 Galvannealed sheet, all solid welded.
Steering Wheel:	The steering wheel on vehicle-themed panels shall be constructed of a high density polyethylene produced from high performance U.V. stabilized rotational molding grade resins with a comprehensive additive package. These resins are tested in accordance with ASTM testing procedures D-1505, D-1248, D-1693 (b), D-638, D-790 and D-746. Resin's properties shall exhibit a balance of toughness, rigidity, environmental stress crack resistance and excellent low temperature impact performance. Wall thickness shall be 1/8". The steering wheel hub cover shall be constructed of injection molded polypropylene which shall contain U.V. light stabilizers. Model 714-714-11 4 X 4 Panel shall contain two side-by-side steering wheels for cooperative play.
Star Brackets:	Themed for Space Ship Panel, star brackets will be constructed of 11 ga. HRPO steel and powder coat painted.
Fasteners:	Each assembly shall contain Versalok Fasteners and Fastener Style A hardware.
Finishes:	The panels and steering wheels shall have molded-in color. Each panel assembly shall have a two-color scheme. The rung brackets and clamps shall have a Mira-Cote finish.

Consult Miracle's "Glossary of Technical Data for Materials, Processes & Finishes" for specifications of underlined items.

Kids' Choice®

Electronic Panels

714-715-16
Electronic Piano Panel



714-715-17
Electronic Animal Panel



DESCRIPTION

These deck-mounting electronic activity panels are designed to enhance imagination and creative play. Panels play either music or animal noises to incorporate sound and learning into any playground theme.

MATERIALS

Panels: The panels shall be constructed of Mira-Lene with all corners rounded. The panels shall measure 36-1/2" x 40" and designs routed in the front and back.

Rung/Brackets: The rung shall be constructed of 1" pipe Gator Grip, bracket tabs shall be constructed of 11 ga. A-60 Galvannealed sheet, all solid welded.

Batteries: Each assembly shall contain three (3) "D" size alkaline batteries.

Fasteners: Each assembly shall contain Versalok Fasteners and Fastener Style A hardware.

Finishes: The rung brackets and clamps shall have a Mira-Cote finish.

Miracle Product Specifications

Activity Panel Inserts

ACTIVITY PANEL INSERTS

714-715-201
Hypnotize Insert

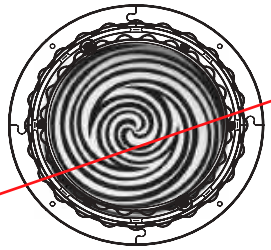

714-715-202
Funhouse Insert

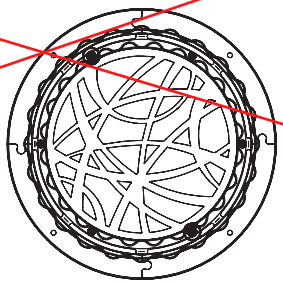

714-715-203
Very Buried Insert

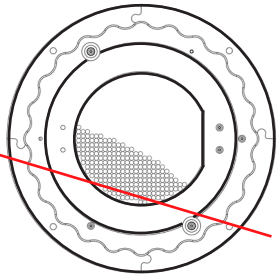

714-715-204
A-maze-ing Insert

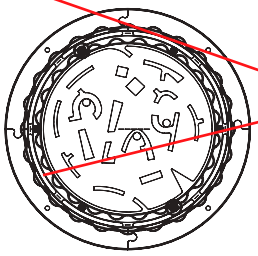

714-715-205
Four-the-Win Insert

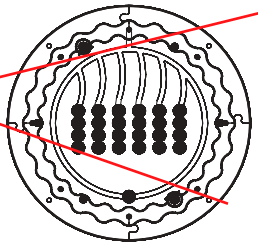

714-715-206
Magical Music Insert

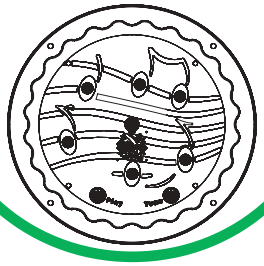

714-715-207
Slide & Solve Insert

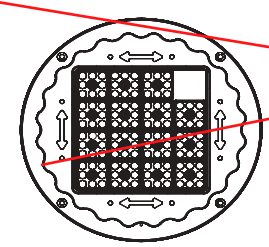

714-715-208
3-Digit RG Timer Insert

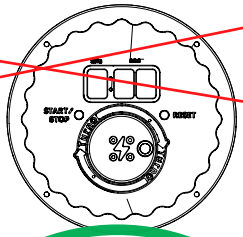

714-715-216
Solar Explorer Panel Insert
f/ KC/TC/TCX

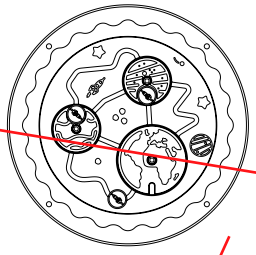

714-715-209
Cam Chimes Panel Insert
f/ KC/TC/TCX

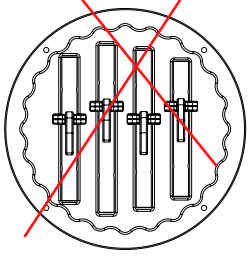

714-715-212
3 Bell Panel Insert
f/ KC/TC/TCX

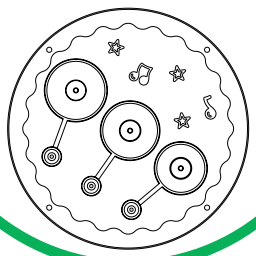

714-715-213
Bongo Panel Insert
f/ KC/TC/TCX

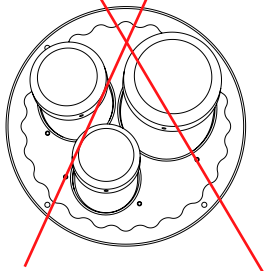

Consult Miracle's "Glossary of Technical Data for Materials, Processes & Finishes" for specifications of underlined items.

714-715-201, 714-715-202, 714-715-203, 714-715-204, 714-715-205, 714-715-206, 714-715-207, 714-715-208, 714-715-209, 714-715-212, 714-715-213, 714-715-214, 714-715-211, 714-715-215 714-715-216,

Activity Panel Inserts

Activity Panel Inserts

714-715-214
Tongue Drum Panel Insert
f/ KC/TC/TCX

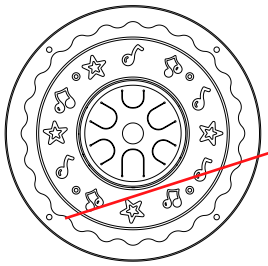

714-715-211
Make It Rain Panel Insert
f/ KC/TC/TCX

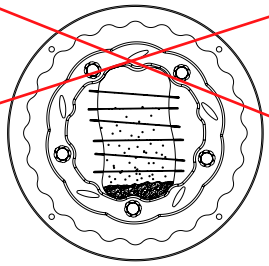

714-715-215
Tumble Cog Panel Insert
f/ KC/TC/TCX

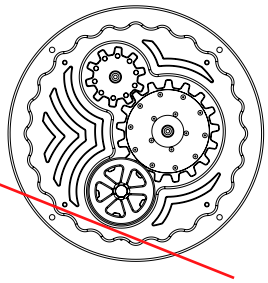

DESCRIPTION

These representational activity panel inserts are designed to enhance imagination and creative play.

MATERIALS

Insert Panel Options: Insert panel options shall be constructed from a combination of 1/2" thick high-density polyethylene, 3/4" thick high-density polyethylene, 3/16" thick polycarbonate, linear low-density polyethylene caps and stainless steel ball bearings.

714-715-201, 714-715-202, 714-715-203, 714-715-204, 714-715-205, 714-715-206, 714-715-207, 714-715-208, 714-715-209, 714-715-211, 714-715-212, 714-715-213, 714-715-214, 714-715-215, 714-715-216

Kids' Choice®

Imagination Panels & **Activity Panels** - Below Deck

Models included:

MODEL	DESCRIPTION
714-602-6B	Steel Panel, Crawl Through
714-617-B	Space Ship Panel
714-713-5B	Door Panel
714-713-17B	Door Panel Below Deck
714-713-18B	Window Panel Below Deck
714-713-19B	Store Panel Below Deck
714-713-20B	Door Panel W/Welcome Below Deck
714-713-21B	Space Maze Panel KC Below Deck
714-713-22B	Alphabet Panel KC Below Deck
714-713-23B	Braille Panel KC Below Deck
714-713-24B	Sign Language Phrases Panel KC Below Deck
714-713-25B	Sign Language Alphabet Panel KC Below Deck
714-714-2B	Fire Truck Panel
714-714-4B	Train Panel
714-714-11B	4 X 4 Panel KC Below Deck
714-714-11HB	4 X 4 Half Panel KC Below Deck
714-714-12B	Big Rig Panel Below Deck
714-714-13B	Plane Panel KC Below Deck
714-715-3B	3' Jump Panel
714-715-5B	5' Jump Panel
714-715-13B	Calypso 3-Drum Panel
714-715-20B	Activity Panel Frame

MODELS CONTINUED ON NEXT PAGE

Consult Miracle's "Glossary of Technical Data for Materials, Processes & Finishes" for specifications of underlined items.

714-602-6B, 714-617-B, 714-713-5B, 714-714-2B, 714-714-4B,, 714-715-13B, 714-715-20B, 714-761-2B, 714-761-3B, 714-761-4B, 714-713-17B, 714-713-18B, 714-713-19B, 714-713-20B, 714-714-11B, 714-714-11HB, 714-714-12B, 714-714-13B, 714-715-25B, 714-715-26B, 714-715-27B, 714-715-28B, 714-715-29B, 714-715-3B, 714-715-5B, 714-895-1B, 714895-2B, 714-895-3B, 714-713-21B, 714-713-22B, 714-713-23B, 714-713-24B, 714-713-25B

Imagination & Activity Panels (Below Deck)

Kids' Choice®

Imagination Panels & Activity Panels - Below Deck

Models included: (continued):

MODEL	DESCRIPTION
714-715-25B	Museum Mosaic Disk Panel KC Below Deck
714-715-26B	Museum Opt Illusion Panel KC Below Deck
714-715-27B	Museum Pin Panel KC Below Deck
714-715-28B	Museum Washer Panel KC Below Deck
714-715-29B	Museum Zoetrope KC Below Deck
714-761-2B	Piston Panel
714-761-3B	Gear Panel
714-761-4B	Sliding Tile Panel
714-895-1B	Barn Wall Panel
714-895-2B	Barn Door Panel
714-895-3B	Barn Window Panel

Note:
Deck systems are NOT included in these assemblies. Please refer to Construction Drawings for the model particular to your system.

714-602-6B:
Steel Panel, Crawl Through

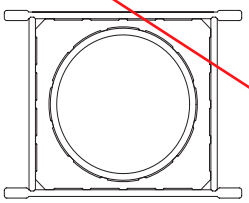

714-617-B:
Space Ship Panel

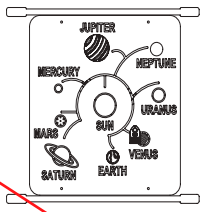

714-713-5B:
Door Panel

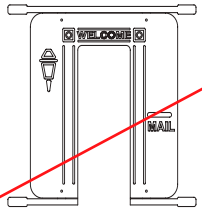

714-713-17B
Door Panel
Below Deck

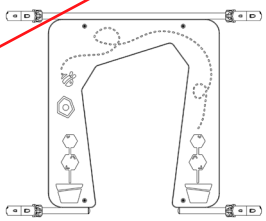

714-713-18B
Window Panel
Below Deck

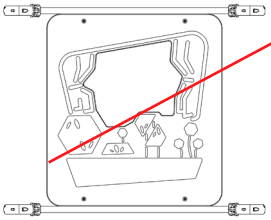

714-713-19B
Store Panel
Below Deck

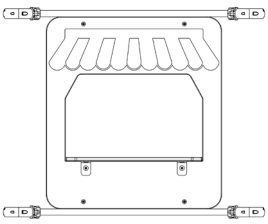

714-713-20B
Door Panel W/Welcome
Below Deck

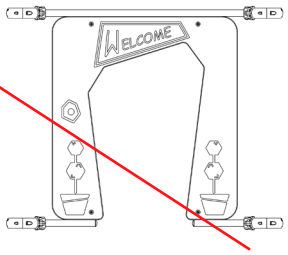

714-602-6B, 714-617-B, 714-713-5B, 714-714-2B, 714-714-4B,, 714-715-13B, 714-715-20B, 714-761-2B, 714-761-3B, 714-761-4B, 714-713-17B, 714-713-18B, 714-713-19B, 714-713-20B, 714-714-11B, 714-714-11HB, 714-714-12B, 714-714-13B, 714-715-25B, 714-715-26B, 714-715-27B, 714-715-28B, 714-715-29B, 714-715-3B, 714-715-5B, 714-895-1B, 714895-2B, 714-895-3B, 714-713-21B, 714-713-22B, 714-713-23B, 714-713-24B, 714-713-25B

Kids' Choice®

Imagination Panels & Activity Panels - Below Deck

714-713-21B: Space Maze Panel KC Below Deck

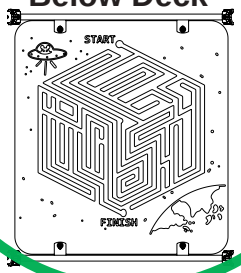

714-713-22B: Alphabet Panel KC Below Deck

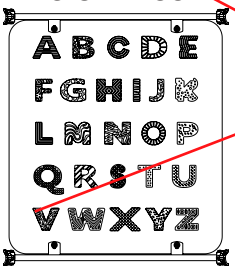

714-713-23B: Braille Panel KC Below Deck

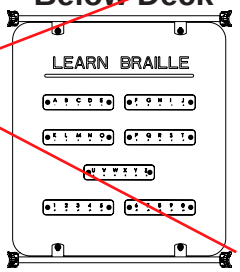

714-713-24B: Sign Language Phrases Panel KC Below Deck

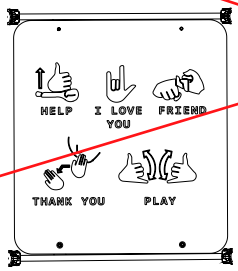

714-714-25B: Sign Language Alphabet Panel KC Below Deck

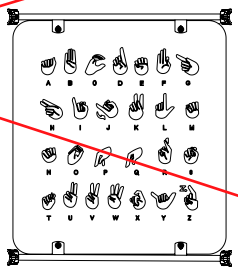

714-714-2B: Fire Truck Panel

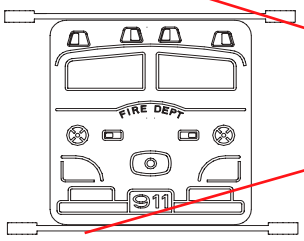

714-714-4B: Train Panel

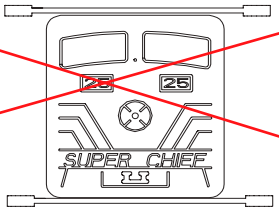

714-714-11B 4 X 4 Panel KC Below Deck

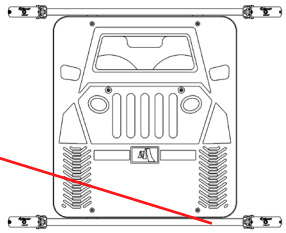

714-602-6B, 714-617-B, 714-713-5B, 714-714-2B, 714-714-4B,, 714-715-13B, 714-715-20B, 714-761-2B, 714-761-3B, 714-761-4B, 714-713-17B, 714-713-18B, 714-713-19B, 714-713-20B, 714-714-11B, 714-714-11HB, 714-714-12B, 714-714-13B, 714-715-25B, 714-715-26B, 714-715-27B, 714-715-28B, 714-715-29B, 714-715-3B, 714-715-5B, 714-895-1B, 714895-2B, 714-895-3B, 714-713-21B, 714-713-22B, 714-713-23B, 714-713-24B, 714-713-25B

Imagination & Activity Panels (Below Deck)

Kids' Choice®

Imagination Panels & Activity Panels - Below Deck

714-714-11HB
4 X 4 Half Panel KC Below Deck

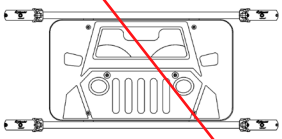

714-714-12B
Big Rig Panel Below Deck

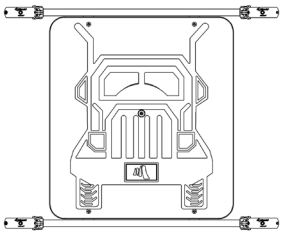

714-714-13B
Plane Panel KC Below Deck

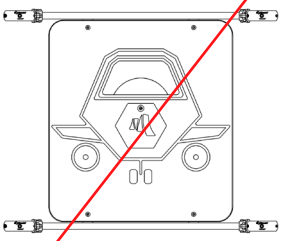

714-715-3B:
Jump Panel (3' Deck)

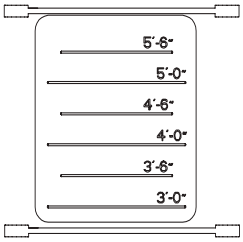

714-715-5B:
Jump Panel (5' Deck)

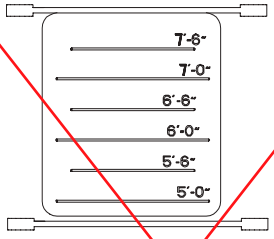

714-715-13B:
Calypso 3-Drum Panel

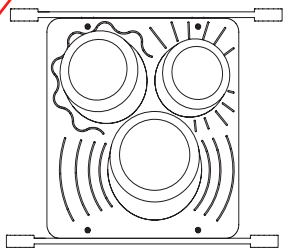

714-715-20B:
Activity Panel Frame

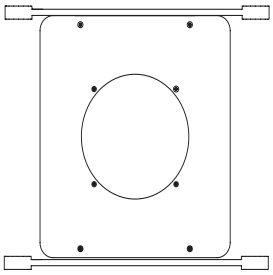

714-715-25B
Museum Mosaic Disk Panel KC Below Deck

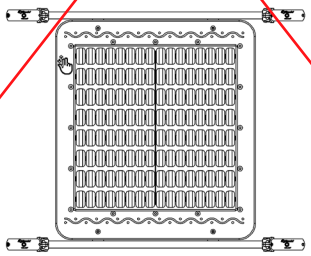

714-715-26B
Museum Opt Illusion Panel KC Below Deck

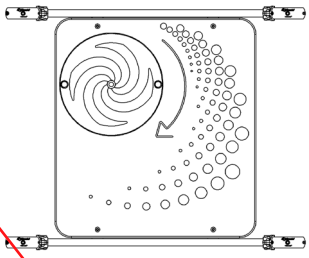

714-715-27B
Museum Pin Panel KC Below Deck

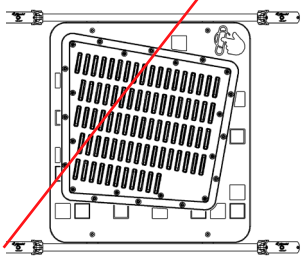

714-715-28B
Museum Washer Panel KC Below Deck

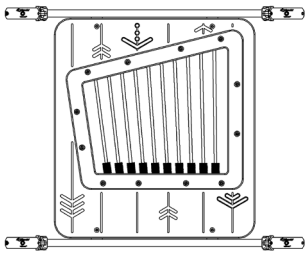

714-715-29B
Museum Zoetrope KC Below Deck

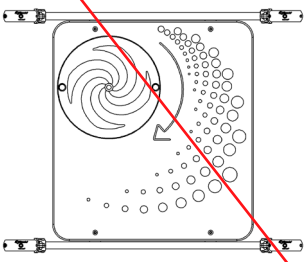

714-602-6B, 714-617-B, 714-713-5B, 714-714-2B, 714-714-4B,, 714-715-13B, 714-715-20B, 714-761-2B, 714-761-3B, 714-761-4B, 714-713-17B, 714-713-18B, 714-713-19B, 714-713-20B, 714-714-11B, 714-714-11HB, 714-714-12B, 714-714-13B, 714-715-25B, 714-715-26B, 714-715-27B, 714-715-28B, 714-715-29B, 714-715-3B, 714-715-5B, 714-895-1B, 714895-2B, 714-895-3B, 714-713-21B, 714-713-22B, 714-713-23B, 714-713-24B, 714-713-25B

Kids' Choice®

Imagination Panels & Activity Panels - Below Deck

714-761-2B:
Piston Panel

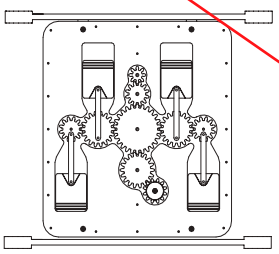

714-761-3B:
Gear Panel

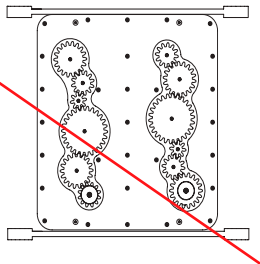

714-761-4B:
Sliding Tile Panel

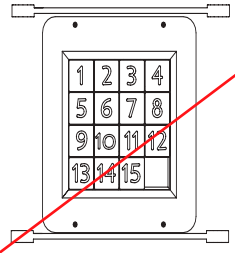

714-895-1B:
Barn Wall Panel

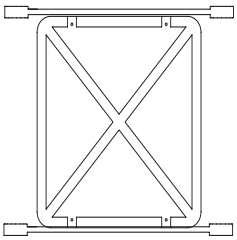

714-895-2B:
Barn Door Panel

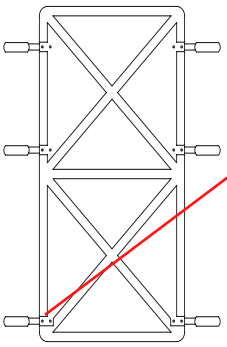

714-895-3B:
Barn Window Panel

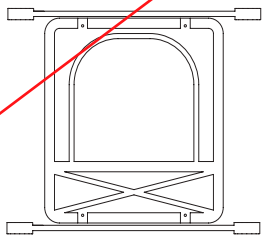

Kids' Choice®

Imagination Panels & Activity Panels - Below Deck

DESCRIPTION

These representational activity panels, designed to enhance imagination and creative play, may be freestanding, clustered or below deck.

- Vehicle-themed panels feature steering wheel assemblies.
- The Piston Panel and Gear Panel contain dynamic, user-driven parts sealed behind a transparent, tamper-resistant cover.
- The Sliding Tile Panel contains 15 routed, moveable tiles with one empty space challenging users to shift the tiles into proper sequence.
- The Calypso 3-Drum Panel allows musical expression, that may be struck with the hands to create different sounds.

MATERIALS

Panels:	The panels shall be constructed of Mira-Lene with all corners rounded. Panels shall measure 36-1/2" x 40" and shall contain routered designs in several themes. The panel shall be supported between posts by top and bottom rungs of 1" pipe, each with two tabs of 11 ga. A-60 Galvannealed sheet, solid welded.
Steel Panel, Crawl Through Model 714-602-6B only	The steel crawl through panel shall comprise rungs and a ring of 1" pipe, Gator Grip, and a 7 ga. sheet, laser cut panel measuring 33-5/8" x 36".
Barn Door Panel: Model 714-895-2B only	In addition to the above materials and specifications, Model 714-895-2B shall be supported between posts by top, middle and bottom rungs of 1" pipe, each with two (2) tabs of 11 ga. A-60 Galvannealed sheet, solid welded. Panel shall measure 36-1/2" x 71-1/2".
Gear Panel and Piston Panel: Model 714-761-3B, 714-761-2B only	In addition to the above materials and specifications, Model 714-761-3B shall contain a clear polycarbonate cover mechanically fastened over two side-by-side sets of 1/4" thick gears, to be constructed of high-density polyethylene, which shall turn on nylon bushings, except for black nylon handles and drive gears which shall turn on bronze bushings. Its opposite side shall contain side-by-side routed finger mazes. Model 714-761-2B shall contain a cover, gears, and knob as described herein, and connecting rod and piston shapes of 1/4" thick high-density polyethylene as well. Its opposite side shall contain routed designs.
Sliding Tile Panel: Model 714-761-4B only	In addition to material and specifications detailed in "panels" paragraph above, Model 714-761-4B shall contain 15 moveable, tongue-and-groove tiles with routed numerals constructed of 1/4" thick high-density polyethylene.
Store Panel: Model 714-713-19B only	In addition to material and specifications detailed in "panels" paragraph above, Model 714-713-19B shall contain brackets holding the counter panel on constructed of 7ga. glv bent sheet steel.
Braille Panel KC: 714-713-23B only	In addition to material and specifications detailed in “panels” paragraph above, model 714-713-23B shall contain 3/32" lexan.

Consult Miracle's "Glossary of Technical Data for Materials, Processes & Finishes" for specifications of underlined items.

Kids' Choice®

Imagination Panels & Activity Panels - Below Deck

MATERIALS ***(continued)***

Calypso 3-Drum Panel: Model 714-715-13B only	In addition to material and specifications detailed in "panels" paragraph above, Model 714-715-13B shall contain 3 rotational molded drums of low density polyethylene resin. Each drum is attached to the panel through a cover plate constructed of 11 ga. galvanized steel sheet with a Mira-Cote finish.
Museum Pin Panel KC: 714-715-27B only	In addition to material and specifications detailed in “panels” paragraph above, model 714-715-27B shall contain polystyrene high impact static cylinders in red and blue and ½” stainless steel rods.
Museum Washer Panel KC: 714-715-28B only	In addition to material and specifications detailed in “panels” paragraph above, model 714-715-28B shall contain ½” stainless steel acme threaded rod.
Museum Zoetrope KC: 714-715-29B only	In addition to material and specifications detailed in “panels” paragraph above, model 714-715-29B shall contain the weldment for the spinner event which shall be constructed of SHST HR 4.5mm (7 ga.) and 1215 steel.
Rung Bracket:	The rung brackets shall be constructed of 1" pipe with bolting tabs of 11 ga. A-60 Galvannealed sheet, all solid welded.
Steering Wheel:	The steering wheel on vehicle-themed panels shall be constructed of a high density polyethylene produced from high performance, U.V. stabilized rotational molding grade resins with a comprehensive additive package. These resins are tested in accordance with ASTM testing procedures D-1505, D-1248, D-1693 (b), D-638, D-790 and D-746. Resin's properties shall exhibit a balance of toughness, rigidity, environmental stress crack resistance and excellent low temperature impact performance. Wall thickness shall be 1/8". The steering wheel hub cover shall be constructed of injection molded polypropylene which shall contain U.V. light stabilizers. Model 714-714-11B 4X4 Panel shall contain two side-by-side steering wheels for cooperative play.
Star Brackets:	Themed for Space Ship Panel, star brackets shall be constructed of 11 ga. HRPO steel and powder coat painted.
Fasteners:	Each assembly shall contain Versalok Fasteners and Fastener Style A hardware.
Finishes:	The steering wheel and two-color panels shall have molded-in color. The rungs, clamps, and steel panel shall have a Mira-Cote finish.

Consult Miracle's "Glossary of Technical Data for Materials, Processes & Finishes" for specifications of underlined items.

714-602-6B, 714-617-B, 714-713-5B, 714-714-2B, 714-714-4B,, 714-715-13B, 714-715-20B, 714-761-2B, 714-761-3B, 714-761-4B, 714-713-17B, 714-713-18B, 714-713-19B, 714-713-20B, 714-714-11B, 714-714-11HB, 714-714-12B, 714-714-13B, 714-715-25B, 714-715-26B, 714-715-27B, 714-715-28B, 714-715-29B, 714-715-3B, 714-715-5B, 714-895-1B, 714895-2B, 714-895-3B, 714-713-21B, 714-713-22B, 714-713-23B, 714-713-24B, 714-713-25B

Product Specifications

MIRACLE RECREATION EQUIPMENT COMPANY

Kids' Choice
Cliff Climber and Canyon Climber for 3', 5', 6'-6" & 10' Decks

714-719* and 714-719-6

Cliff Climber for 6'-6" Deck

* Model # 714-719 Cliff Climber for 3' or 5' Deck not shown.

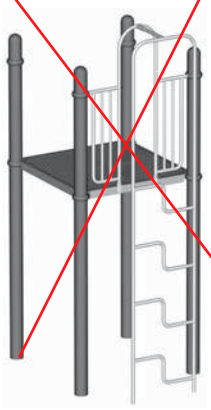

714-721*, 714-721-6 and 714-721-10*

Canyon Climber for 6'-6" Deck

* Model # 714-721 Canyon Climber for 3' or 5' Deck and Model # 714-721-10 Canyon Climber for 10' not shown.



MODEL NO:	PRODUCT:	GRND SPC.	CONCRETE:
714-719	Cliff Climber, 3' or 5' Deck	3'-0" x 3'-0"	0.10 cu. yds.
714-719-6	Cliff Climber, 6'-6" Deck	3'-0" x 3'-0"	0.10 cu. yds.
714-721	Canyon Climber, 3' or 5' Deck	3'-0" x 3'-0"	0.10 cu. yds.
714-721-6	Canyon Climber, 6'-6" Deck	3'-0" x 3'-0"	0.10 cu. yds.
714-721-10	Canyon Climber, 10' Deck	3'-0" x 3'-0"	0.10 cu. yds.

DESCRIPTION:

The cliff climber and canyon climber are to be used as an entry to or an exit from a 3', 5', 6'-6" or 10' deck.

MATERIALS:

Cliff Climber: The cliff climber side rails, rungs shall be constructed of 1" pipe, formed, drilled and all solid welded construction with plastic pipe plugs inserted in open ends. The extension tube shall be constructed of 1 1/4" pipe, 10 ga.

Canyon Climber: The climber shall consist of a frame and curved rungs all constructed of 1" pipe solid welded. The rungs shall be curved in a semi-circle shape with a 19" diameter and shall alternate sides of the frame as they ascend.

Deck Enclosure Assembly: The enclosure assembly shall consist of top supports, an extension tube, and an arched upright, which shall be constructed of 1" pipe, drilled, formed, and mashed, and vertical rungs which shall be constructed of 1" tube. The enclosure assembly shall be solid welded.

Fasteners: All hardware shall be Fastener Style A.

Versalok Fasteners: All Versalok Fasteners for deck and component attachment shall be aluminum alloy.

Finishes: The cliff climber, canyon climber, enclosure assembly, and Versalok Fasteners shall have a Mira-cote finish.

Product Specifications

Kids' Choice®

30" I.D. Funnel Tunnels with Windows from 10' & 8' Decks

714-742W and 714-742-1W | 714-742-8W and 714-742-81W

30" I.D. Funnel Tunnel from 10' Deck; Left

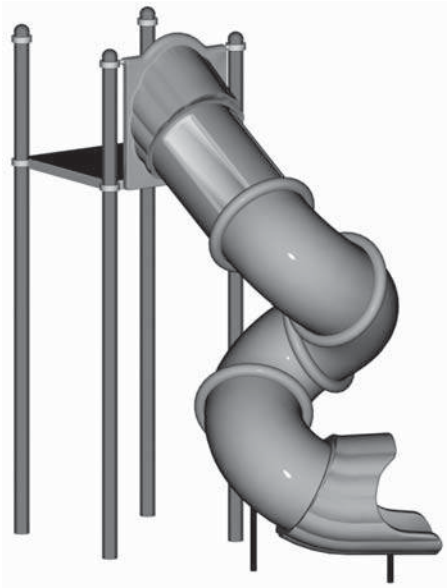

30" I.D. Funnel Tunnel from 10' Deck; Right

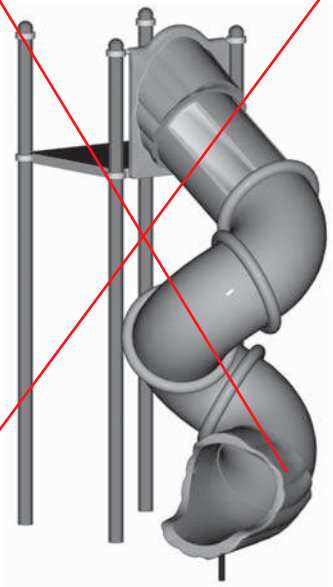

714-742W and 714-742-1W | 714-742-8W and 714-742-81W

30" I.D. Funnel Tunnel from 8' Deck; Left

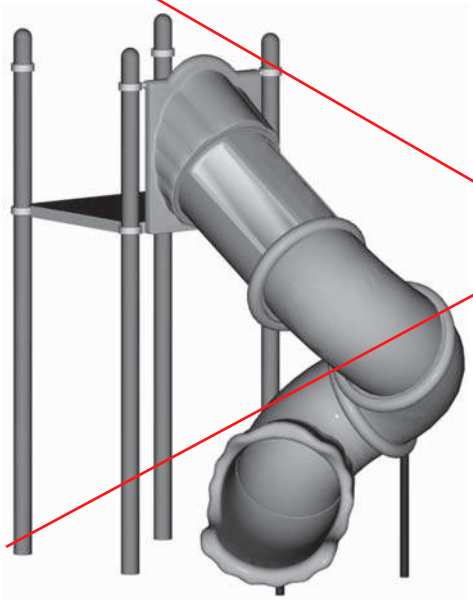

30" I.D. Funnel Tunnel from 8' Deck; Right

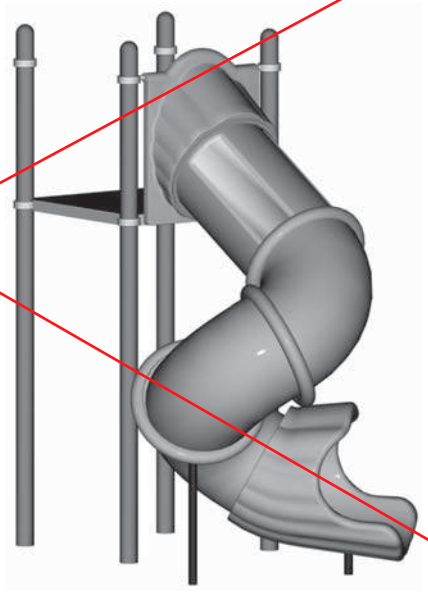

MIRACLE RECREATION EQUIPMENT COMPANY

Kids' Choice®
30" I.D. Funnel Tunnels with Windows

MODEL #	PRODUCT	GRND SPC.	PROT. AREA	CONCRETE
714-742W	30" I.D. Funnel Tunnel w/Windows from 10' Deck, Left	8' x 6'	24'-5" x 25'-3"	0.10 cu. yds.
714-742-1W	30" I.D. Funnel Tunnel w/Windows from 10' Deck, Right	8' x 6'	24'-5" x 25'-3"	0.10 cu. yds.
714-742-8W	30" I.D. Funnel Tunnel w/Windows from 8' Deck, Left	8' x 6'	22'-0" x 23'-6"	0.10 cu. yds.
714-742-81W	30" I.D. Funnel Tunnel w/Windows from 8' Deck, Right	8' x 6'	22'-0" x 23'-6"	0.10 cu. yds.

DESCRIPTION

The Funnel Tunnel slides with windows are 30" inner diameter tube slides designed to be used as exits from 10' and 8' deck heights. Overall height for 8' models is 11'-2", 10' models is 13'-2".

MATERIALS

Slides: All pieces shall be Rockite with a 30" inner diameter. Tube-to-tube connections shall have a Rockite flange cover. The bedway shall have no exposed internal fasteners. The exit section shall be constructed of double-wall Rockite with a 25" centerline radius. All slide pieces shall be constructed with a 1/4" to 3/8" wall thickness. The tube joints shall be externally flanged and overlapping, with a 1" wide flange. The windows shall be clear polycarbonate and shall measure 13" x 40".

Slide Entry Panel: The slide panels shall Rockite and shall measure 47" x 38" x 3" with a molded-in 30° extension, and shall be supported by a horizontal rung constructed of 1" pipe.

Slide Support Legs: The slide support legs shall be die-formed out of 1-1/4" pipe.

Front Leg: The front leg shall consist of an upright and a bolting plate. The upright shall be constructed of 2" pipe. The bolting plate shall be constructed of sheet 11 ga., A-60 Galvannealed and shall measure 7" x 7", drilled and welded to the upright.

Fasteners: The assembly shall contain Versalok Fasteners and Fastener Style A hardware.

Finishes: The Rockite entry panel and slide assembly shall have color molded in. The support leg, front leg, and clamps shall have a Mira-Cote finish.

Consult Miracle's "Glossary of Technical Data for Materials, Processes and Finishes" for specifications of the underlined items.

714-742W, 714-742-1W, 714-742-8W, 714-742-81W

Product Specifications

Kids' Choice ®

Cylinder Panels

Model #	Product	Concrete
7147631	PANEL CRITTER PUZZLE	see post specifications
7147633	PANEL 3 LETTER WORD SPELLER	see post specifications
7147635	PANEL CYLINDER PLANET	see post specifications
7147636	HEXS AND XS PANEL KC	see post specifications
7147637	DINOSAUR PANEL KC	see post specifications

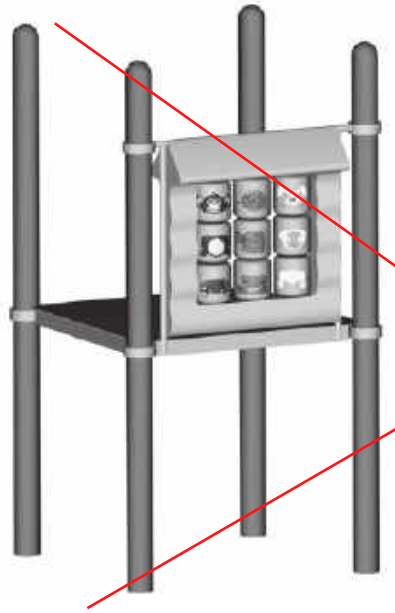

7147631
PANEL CRITTER PUZZLE



7147633
PANEL 3 LETTER
WORD SPELLER

Kids' Choice ®

Cylinder Panels

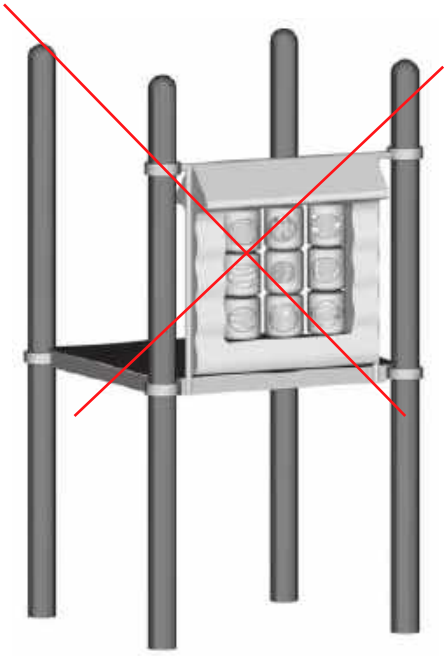

7147635
PANEL CYLINDER
PLANET

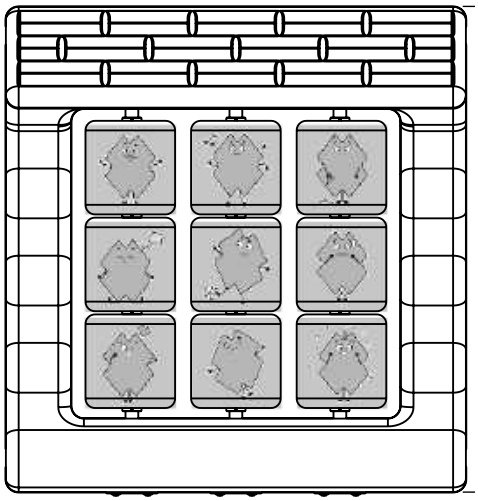



7147636
HEXS AND XS PANEL KC

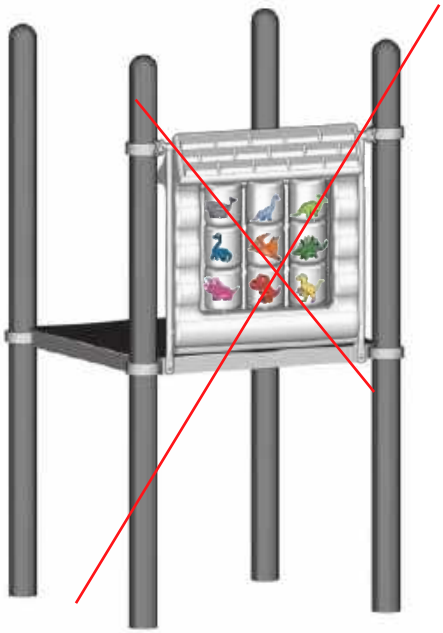

7147637
DINOSAUR PANEL
KC

Kids' Choice ®

Cylinder Panels

DESCRIPTION

These deck-mounting Cylinder Panels are panel assemblies which contain nine cylinders in rows and columns of three. The cylinders spin independently of one another, and each contains two molded-in graphic images on opposite sides.

MATERIALS

Panel	The panel shall be constructed of Rockite with all corners rounded, and shall have cylinder assemblies factory-installed using tamper-proof hardware.
Cylinders	Each cylinder shall be constructed of Rockite with molded-in graphics on two "sides." Cylinder axles shall be constructed of 1" pipe.
Enclosures	Each enclosure shall consist of a vertical upright and horizontal stubs of 1" pipe solid welded, drilled and formed.
Versalok Fasteners	All Versalok Fasteners for deck and component attachment shall be aluminum alloy.
Fasteners	All hardware shall be Fastener Style A.
Finishes	The Rockite panel and cylinders shall have color molded in. The enclosures shall have a Mira-Cote finish.

Consult Miracle's "Glossary of Technical Data for Materials, Processes & Finishes" for specifications of underlined items.

Product Specifications

MIRACLE RECREATION EQUIPMENT COMPANY

Kids' Choice®

Bongo Perch, Big Timber® Bongo Stump Perch, Bongo Bridges and Big Timber® Bongo Stump Bridges

Ground-to-Deck, Between Decks or Freestanding; spans of 8', 10' & 12'

714-625-1

Big Timber Bongo Stump Perch



714-625-8

Big Timber Bongo Stump Bridge, (4) Perches; 8' Span

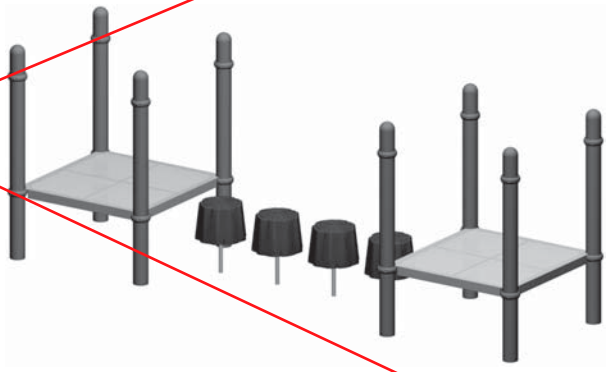

714-625-10

Big Timber Bongo Stump Bridge, (5) Perches; 10' Span

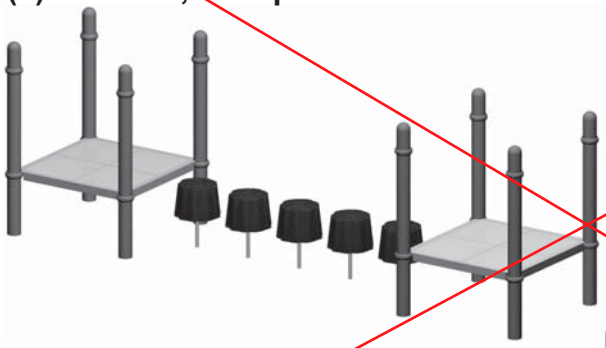

714-625-12

Big Timber Bongo Stump Bridge, (6) Perches; 12' Span

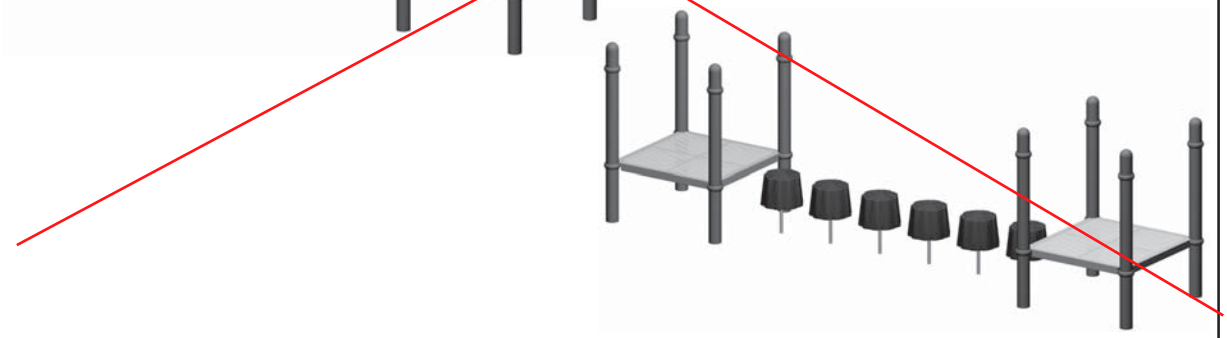

714-625-1, 714-625-8, 714-625-10, 714-625-12, 714-772-1, 714-772-8, 714-772-10, 714-772-12

MIRACLE RECREATION EQUIPMENT COMPANY

Kids' Choice®

Deck-mount models for 2'-0" Decks or lower, not included.

Bongo Perch, Big Timber® Bongo Stump Perch, Bongo Bridges and Big Timber® Bongo Stump Bridges

Ground-to-Deck, Between Decks or Freestanding; spans of 8', 10' & 12'

714-772-1

Bongo Perch



714-772-8

Bongo Bridge, (4) Perches; 8' Span

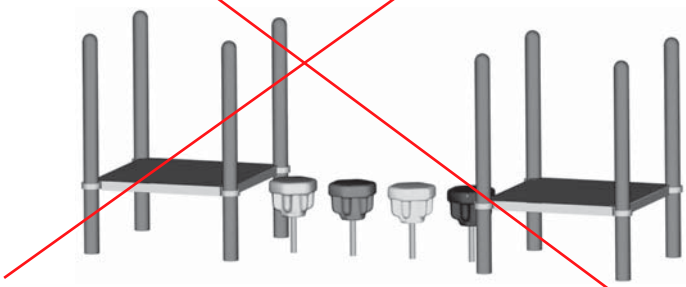

714-772-10

Bongo Bridge, (5) Perches; 10' Span

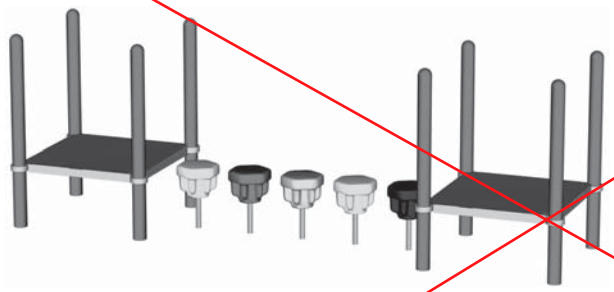

714-772-12

Bongo Bridge, (6) Perches; 12' Span

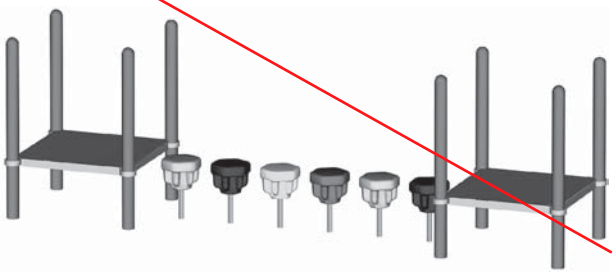

714-625-1, 714-625-8, 714-625-10, 714-625-12, 714-772-1, 714-772-8, 714-772-10, 714-772-12

MIRACLE RECREATION EQUIPMENT COMPANY

Kids' Choice®

Bongo Perch, Big Timber® Bongo Stump Perch, Bongo Bridges and Big Timber® Bongo Stump Bridges

Ground-to-Deck, Between Decks or Freestanding; spans of 8', 10' & 12'

MODEL #	PRODUCT	GRND SPC.	CONCRETE	PROT. AREA
714-625-1	Big Timber Bongo Stump Perch	1'-4" x 1'-4"	0.05 cu. yds.	14'-6" diameter
714-625-8	Big Timber Bongo Stump Bridge, (4) Perches; 8' Span	1'-4" x 6'-6"	0.20 cu. yds.	14' x 20'
714-625-10	Big Timber Bongo Stump Bridge, (5) Perches; 10' Span	1'-4" x 8'-6"	0.25 cu. yds.	14' x 22'
714-625-12	Big Timber Bongo Stump Bridge, (6) Perches; 12' Span	1'-4" x 12'-6"	0.30 cu. yds.	14' x 22'
714-772-1	Bongo Perch	1'-4" x 1'-4"	0.05 cu. yds.	14'-6" diameter
714-772-8	Bongo Bridge, (4) Perches; 8' Span	1'-4" x 6'-6"	0.20 cu. yds.	14' x 20'
714-772-10	Bongo Bridge, (5) Perches; 10' Span	1'-4" x 8'-6"	0.25 cu. yds.	14' x 22'
714-772-12	Bongo Bridge, (6) Perches; 12' Span	1'-4" x 12'-6"	0.30 cu. yds.	14' x 22'

DESCRIPTION:

The Bongo Bridges are designed to enter/exit 2' or lower deck systems, either as a bridge between decks, a ground-to-deck "stair," or as a freestanding assembly with no decks. When installed as a bridge, Bongo Perches may be installed at ascending/descending heights or all level, but should follow a straight course between decks. Freestanding Bongo Perches may ascend & descend and may follow any course so long as Bongo Perches are set 7" to 9" edge-to-edge. Bongo Perches may also be clustered and installed flush with each other to create a table, seats, small climber, etc. Regardless of layout and design, top surfaces may be set no greater than 24" from Finished Grade.

Note: If designing as bridge between 2'-0" decks intended for 2 to 5 year old users, deck enclosures Model # 714-813-5 must be installed on each deck, which are sold separately.

MATERIALS:

Bongo Perch Pod & Post Assemblies: Each Bongo Perch comprises a pod or stump and post assembly. Pods shall be constructed of Rockite and shall comprise a hex-shaped top surface measuring approximately 16" diameter. Stumps shall be constructed of Rockite and shall comprise a log-shaped top surface measuring approximately 17" diameter. Pods and stumps shall measure 12" high without posts. Posts shall be constructed of 1-1/2" pipe with a 5-7/8" diameter mounting plate of 11 ga. G-90 galvanized solid welded to the posts. Post length shall be 38-5/16" before field assembly to pod or stump. Overall assembled length shall be 42".

Fasteners: All fasteners shall be Fastener Style A.

Finishes: The Rockite pod and stump steps shall have color molded in. The posts shall be finished in Miracote.

Consult Miracle's "Glossary of Technical Data for Materials, Processes & Finishes" for specifications of underlined items.

714-625-1, 714-625-8, 714-625-10, 714-625-12, 714-772-1, 714-772-8, 714-772-10, 714-772-12

MIRACLE RECREATION EQUIPMENT COMPANY

Kids' Choice

Crunch Station

714-782

Crunch Station

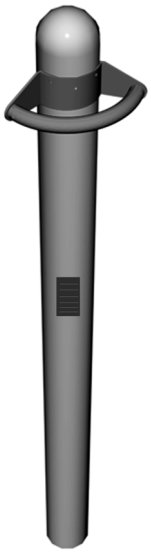

Crunch Station

Kids' Choice

Crunch Station

MODEL #	PRODUCT	PROT. AREA	CONCRETE
714-782	Crunch Station	6'-8" radius/post	See Post Spec.

DESCRIPTION:

The Crunch Station is a semi-circular horizontal rung assembly designed for mounting on a 5" steel deck post with the rung set 50" - 80" from finished grade. The Crunch Station enables the user to perform leg lifts and crunches in a standing position.

MATERIALS:

Crunch Station: The Crunch Station shall be constructed of a cut and formed 1" pipe segment solid welded to support and bolt plates of 7 ga. galvanized steel.

Fasteners: All hardware for deck and component attachment shall be Fastener Style A.

Finish: The Crunch Station shall have a Mira-Cote finish.

714-782

Consult Miracle's "Glossary of Technical Data for Materials, Processes & Finishes" for specifications of underlined items.

Kids' Choice®

Handhold for Transfer Point, Wall Enclosures, Recycled Plastic Enclosure, Wire Mesh Enclosure, Treehouse Wall and Enclosure Wall w/Steering Wheel

714-811
Handhold for Transfer Deck
(1' or 1'-6" Deck)

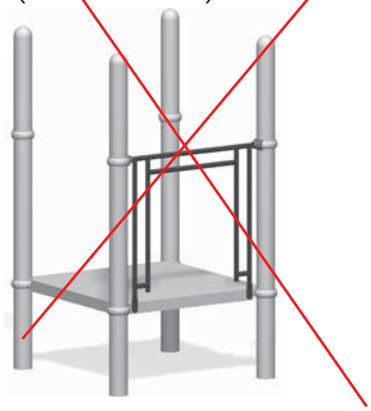

714-816
Wall Enclosure



714-816R
Wall Enclosure Recycled Plastic

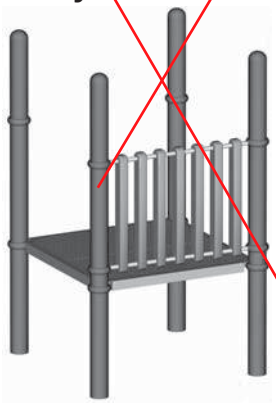

714-816-1
Wire Mesh Enclosure

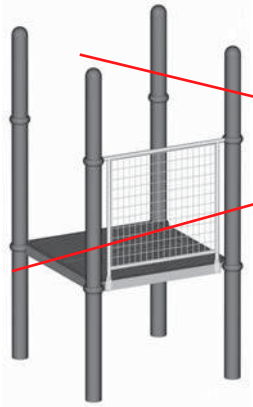

714-816-45
Wall Enclosure, Wide Side

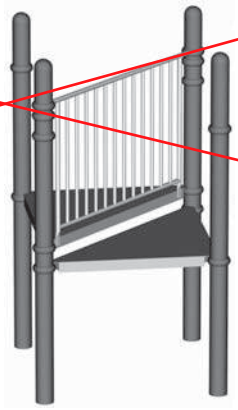

714-817
Treehouse Wall w/Seat



714-900
Wall Enclosure w/Steering Wheel



Consult Miracle's "Glossary of Technical Data for Materials, Processes and Finishes" for specifications of underlined items.

Kids' Choice®

Handhold for Transfer Deck, Wall Enclosures, Recycled Plastic Enclosure, Wire Mesh Enclosure, Treehouse Wall and Enclosure Wall w/Steering Wheel

MODEL	PRODUCT	PROT. AREA	GRND. SPACE	CONCRETE
714-811	Handhold for Transfer Deck (1' or 1'-6" Deck)	NA	NA	NA
714-816	Wall Enclosure	NA	NA	NA
714-816R	Wall Enclosure Recycled Plastic	NA	NA	NA
714-816-1	Wire Mesh Enclosure	NA	NA	NA
714-816-45	Wall Enclosure, Wide Side of 511 TRI-DK	NA	NA	NA
714-817	Treehouse Wall w/Seat	NA	NA	NA
714-900	Wall Enclosure w/Steering Wheel	NA	NA	NA

DESCRIPTION

Model 714-811 Handhold for Transfer Deck, is a support rail to assist wheelchair users with access to a 12" to 18" transfer point deck.

Model 714-816R Recycled Plastic Enclosure, Model 714-816 Wall Enclosure and Model 714-816-1 Wire Mesh Enclosure, are designed to be a barrier on any open side of a deck.

Model 714-816-45 Wall Enclosure, Wide Side is designed to be a barrier on the hypotenuse of a right triangle (split) deck.

Model 714-817 Treehouse Wall w/Seat is an enclosure with a PVC-dipped steel seat for use on 6-sided and 8-sided decks only.

Model 714-900 Wall Enclosure w/Steering Wheel is designed to be a barrier designed to enhance imaginative play.

MATERIALS

Wall Enclosure, Wire Mesh Enclosure, Handhold for Transfer Point: The wall enclosure and wire mesh enclosure supports shall consist of a solid welded handrail assembly with top, side and bottom rails constructed of 1" pipe and spoked infill of 3/4" x 1" oval tube. Wire mesh shall be 3 ga. resistance welded at each intersection.

Steering Wheel Mounting Bracket: The steering wheel mounting bracket shall be 7 ga. G-90 Galvanized sheet steel welded to the wall enclosure.

Recycled Plastic Enclosure: The recycled plastic enclosure shall consist of top and bottom support rails constructed of 1" pipe and uprights constructed of 3-1/2 x 2-1/2" recycled plastic timbers.

Enclosure with Seat: The wall enclosure with seat shall comprise a top and bottom rail and end uprights constructed of 1" pipe and spoked infill of 3/4" x 1" oval tube and a seat assembly, all solid welded. The seat assembly shall comprise a frame of 1" pipe with bolting brackets of sheet 7 ga. black HR CQ and a factory-assembled 19" wide seat constructed of 11 ga. sheet, perforated with a staggered pattern of 3/8" diameter holes at 5/8" apart center-to-center. The seat surface shall be approximately 14" from the deck surface.

Consult Miracle's "Glossary of Technical Data for Materials, Processes and Finishes" for specifications of underlined items.

Kids' Choice®

Handhold for Transfer Point, Wall Enclosures, Recycled Plastic Enclosure, Wire Mesh Enclosure, Treehouse Wall and Enclosure Wall w/Steering Wheel

MATERIALS cont.

Steering Wheel: The steering wheel shall be constructed of a high density polyethylene produced from high performance, U.V. stabilized rotational molding grade resins with a comprehensive additive package. These resins are tested in accordance with ASTM testing procedures D-1505, D-1248, D-1693(b), D638, D-790 and D-746. Resin's properties shall exhibit a balance of toughness, rigidity, environmental stress crack resistance, and excellent low temperature impact performance. Wall thickness shall be 1/8". The steering wheel hub cover shall be constructed of injection-molded polypropylene with U.V. light stabilizers.

Fasteners: The assembly shall contain Versalok Fasteners and Fastener Style A hardware.

Finishes: The wall enclosure assemblies, handhold and clamps shall have a Mira-Cote finish. The seat shall be finished in Mira-Therm. The steering wheel and plastic timbers shall have color molded in.

Consult Miracle's "Glossary of Technical Data for Materials, Processes and Finishes" for specifications of underlined items.

Miracle Product Specifications

Kids' Choice®

Deck Enclosures

714-813-1

One-Sided Deck Enclosure

Model mounts vertically on Deck system on Post opposite Post to which Horseshoe Climber (Model # 714-776-5) is mounted.

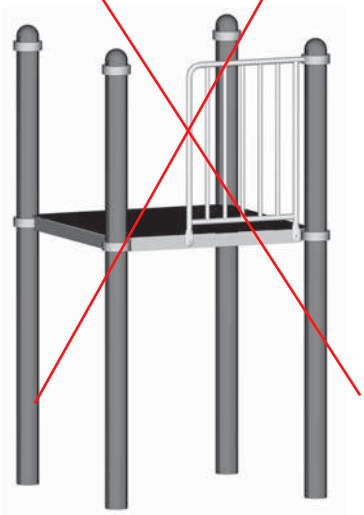

714-813-5

Deck Enclosure

Model mounts vertically on Deck systems at either or both ends of Overhead Climber component



714-813-5R1

Nature Deck Enclosure

Model mounts vertically on Deck systems at either or both ends of Overhead Climber component

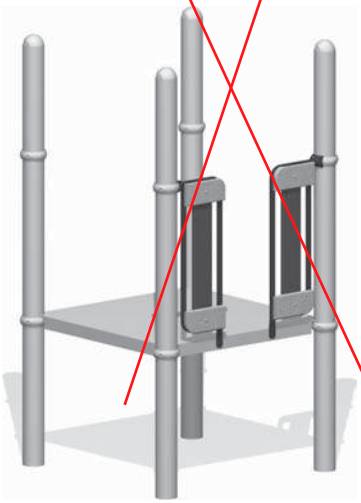

MODEL #	PRODUCT	CONCRETE	GROUND SPACE
714-813-1	One-Sided Deck Enclosure	N/A	N/A
714-813-5	Deck Enclosure	N/A	N/A
714-813-5R1	Nature Deck Enclosure	N/A	N/A

DESCRIPTION

The standard deck enclosures are basic accessories for overhead climber systems, typically installed at either end on a deck system or between deck posts, respectively. The one sided deck enclosure is mounted on deck system for use only with Horseshoe Climber, Model # 714-767, which may be mounted to any corner post of a 4' deck.

Consult Miracle's "Glossary of Technical Data for Materials, Processes and Finishes" for definitions of the underlined items.

Kids' Choice®

Deck Enclosures

MATERIALS

Deck Enclosure (Standard): The deck enclosure shall consist of two pieces, each comprising enclosure rails and uprights. The enclosure rails shall be constructed of 1" pipe, drilled, with plastic pipe plugs inserted in open end (at post) and mashed at deck end. The uprights shall be constructed of 3/4" x 1" oval tube. The entire assembly shall be solid welded.

Deck Enclosure (One-Sided): The one-sided deck enclosure shall comprise enclosure rails and uprights. The enclosure rails shall be constructed of 1" pipe, drilled and mashed at deck end. The uprights shall be constructed of 3/4" x 1" oval tube. The entire assembly shall be solid welded.

Deck Enclosure (Nature Deck): The nature deck enclosure shall comprise rails constructed of 1" pipe drilled and mashed at deck end and fully welded. Brackets of 11 ga. galvanized sheet steel are stitch welded to the 1" pipe frame. Boards of 1" x 5.5" recycled plastic and wood composite are fastened to the frame with Fastener Style A hardware.

Fasteners: All Versalok Fasteners for deck and component attachment shall be aluminum alloy. All hardware shall be Fastener Style A.

Finishes: The deck enclosures and Versalok Fasteners shall have a Mira-Cote finish.

Product Specifications

MIRACLE RECREATION EQUIPMENT COMPANY

Kids' Choice®

End Ladders

714-815-5

End Ladder

for Overhead Climber systems



714-815-51

End Ladder, 1' Top Rung

for Overhead Climber systems

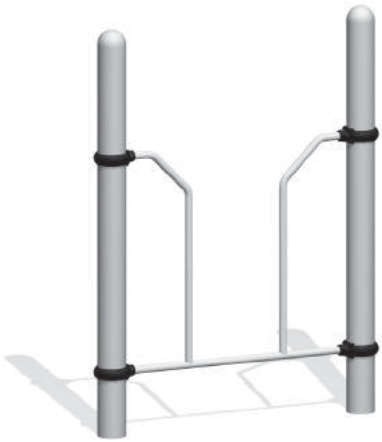

714-815-52

End Ladder, 2' Top Rung

for Overhead Climber systems

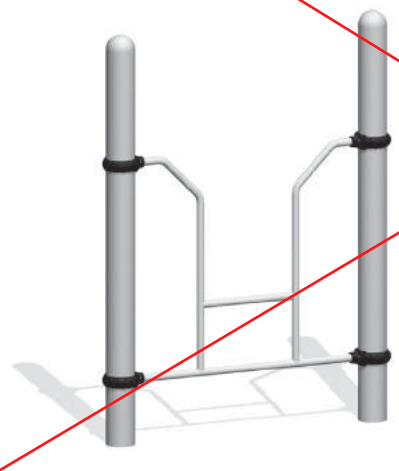

714-815-53

End Ladder, 3' Top Rung

for Overhead Climber systems

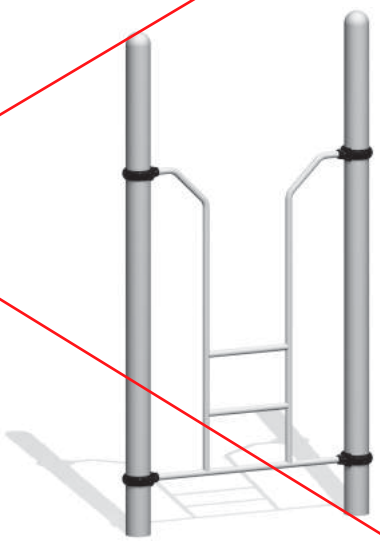

MIRACLE RECREATION EQUIPMENT COMPANY

Kids' Choice®

End Ladders

MODEL #	PRODUCT	GROUND SPACE	CONCRETE
714-815-5	End Ladder	4'-0" x 1'-6"	0.10 cu. yds.
714-815-51	End Ladder, 1' Top Rung	4'-0" x 1'-6"	N/A
714-815-52	End Ladder, 2' Top Rung	4'-0" x 1'-6"	N/A
714-815-53	End Ladder, 3' Top Rung	4'-0" x 1'-6"	N/A

DESCRIPTION

End Ladders are frequently installed at either end of overhead climber assemblies and with other components.

MATERIALS

End Ladder: The end ladder assembly shall comprise two uprights with horizontal rungs solid welded between. Models with no footings shall also have a 41-1/2" long bottom rung comprised of 1" pipe, solid welded to uprights.The rungs and uprights shall be contructed of 1" pipe, formed. Model # 714-815-5 shall measure 104-1/4" x 37-1/4"; Model # 714-815-51 shall measure 39-1/4" x 37-1/4"; Model # 714-815-52 shall measure 51-1/4" x 37-1/4"; Model # 714-815-53 shall measure 63-1/4" x 37-1/4".

Fasteners: All Versalok Fasteners for deck and component attachment shall be aluminum alloy. All hardware shall be Fastener Style A.

Finishes: The Versalok Fasteners and climber assemblies shall have a Mira-Cote finish.

Consult Miracle's "Glossary of Technical Data for Materials, Processes and Finishes" for specifications of underlined items.

Kids' Choice®

Wave Barriers

714-816W

Wave Barrier, Full Bar



714-8161W

Wave Barrier, Full Mesh

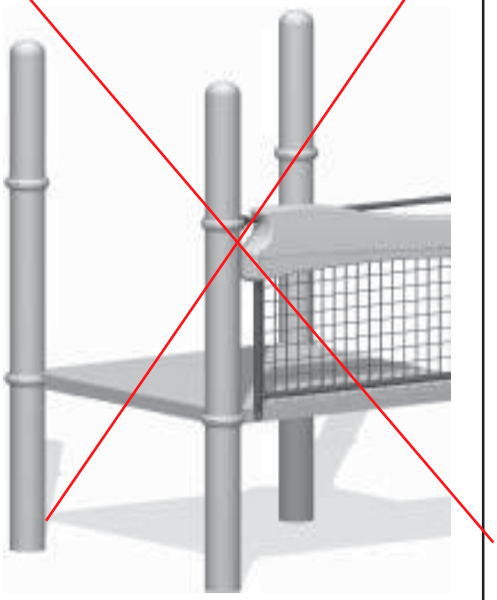

MODEL #	PRODUCT
714-816-W	Wave Barrier, Full Bar
714-816-1W	Wave Barrier, Full Mesh

DESCRIPTION

The Wave Barrier is designed to provide fall protection on Kids' Choice Deck systems.

MATERIALS

Bar Barrier: The barrier shall comprise a frame with uprights and rungs of 1.315" O.D. x 14 ga. galvanized, embossed tubing, fully welded. Brackets of 11 ga. galvanized sheet steel are stitch welded to the tubing to complete the frame. Top Barrier shall be Mira-Therm.

Mesh Barrier: The barrier shall comprise a frame with uprights and rungs of 1.315" O.D. x 14 ga. galvanized, embossed tubing, fully welded. Brackets of 11 ga. galvanized sheet steel are stitch welded to the tubing to complete the frame. Top Barrier shall be Mira-Therm. Mesh shall be constructed of galvanized welded wire, 0.224" dia.

Fasteners: The assembly shall contain Versalok Fasteners and Fastener Style A hardware.

Finishes: The frame and clamps shall have a Mira-Cote finish. The Top Barrier shall be available in Mira-Therm finishes.

Consult Miracle's "Glossary of Technical Data for Materials, Processes & Finishes" for specifications of underlined items.

Product Specifications

MIRACLE RECREATION EQUIPMENT COMPANY

Kids' Choice®
Loop Seat

714-817-1B

Loop Seat



MODEL #	PRODUCT	PROT. AREA	GRND. SPC.
714-817-1B	Loop Seat	17' x 13'-10"	4'-6" x 1'-4"

DESCRIPTION

The Loop Seat is an inventive, economical way for kids to rest between play. The Loop Seat easily installs between existing Deck Posts and is situated at a comfortable 45° angle to create a combination seat and back rest.

MATERIALS

Loop Seat: The Loop Seat shall consist of two loop halves constructed of 2" pipe, solid welded to each other to create one Loop Seat. Each loop half shall measure 32-5/8" in length and 14-13/16" in height. Two 4-3/8" stubs shall be solid welded to short sides of Loop Seat and shall be constructed of 2" pipe.

Fasteners: The assembly shall contain Versalok Fasteners and Fastener Style A hardware.

Finishes: The Loop Seat shall be finished in Mira-Cote.

Consult Miracle's "Glossary of Technical Data for Materials, Processes & Finishes" for specifications of underlined items.

Kids' Choice®

Power Pedaler

714-823-5*

Power Pedaler - Arms & Legs

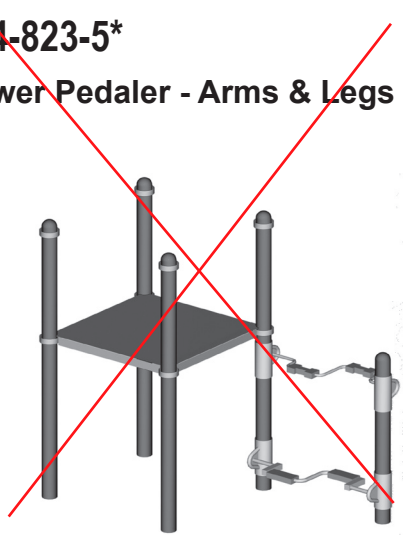

714-823-15*

Power Pedaler - Arms Only

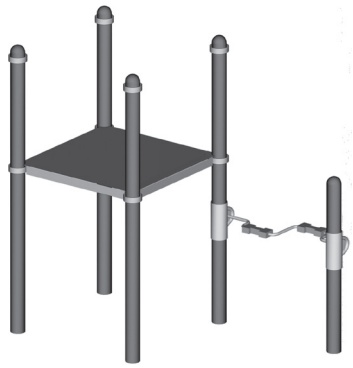

MODEL	PRODUCT	GRND. SPC.	PROT. AREA	CONCRETE
714-823-5*	Power Pedaler - Arms & Legs	5" x 4'-3"	N/A	0.13 cu. yds.
714-823-15*	Power Pedaler - Arms Only	5" x 4'-3"	N/A	0.13 cu. yds.

DESCRIPTION

Power Pedalers are dynamic levers, mounted between the post of a deck assembly and a freestanding post, which users operate with arms, legs, or both. Model 714-823-5 may be mounted to any deck height 5' or greater. Model 714-823-15 may be mounted to any deck height 4' or greater.

Note: Model numbers with an (*) indicate: Post Sold Separately.

MATERIALS

Lever: Arms-operated lever shall be constructed of formed 1" tube and legs-operated lever shall be constructed of formed 1" pipe solid welded with 2" square tube and 12 ga. end caps. Each lever shall contain two hand or foot grips constructed of high density polyethylene mechanically fastened.

Support Weldments: The support weldment sleeves shall be constructed of 5" Sch 40 pipe with U-shaped rails of 1" pipe, 12 ga. and mounting plate of 7 ga. galvanized sheet, all solid welded.

Post: The post for Models 714-823-5 and 714-823-15 are sold separately.

Fasteners: The assembly shall contain Fastener Style A hardware.

Finishes: The lever rail, post, and support weldments shall be finished in Mira-Cote. The hand or foot grips shall have color molded in.

Kids' Choice® - Mira-Therm II

Observation Deck®, Observation Deck® with Arched Entry & Observation Deck® with Extended Steering Wheel

714-849

Observation Deck



714-849-A

Observation Deck with Arched Entry



714-849-6

Observation Deck with Extended Steering Wheel



Kids' Choice® - Mira-Therm II

Observation Deck®, Observation Deck® with Arched Entry & Observation Deck® with Extended Steering Wheel

MODEL #	PRODUCT	GROUND SPACE	PROT. AREA	CONCRETE
714-849	Observation Deck	1'-9" x 3'-10"	N/A	N/A
714-849-A	Observation Deck with Arched Entry	1'-9" x 3'-10"	N/A	N/A
714-849-6	Observation Deck with Extended Steering Wheel	1'-9" x 3'-10"	N/A	N/A

DESCRIPTION

The Observation Decks each consist of a curved deck extension and a curved deck enclosure designed to enhance imaginative play. Model # 714-849-A is designed to be used with vertical climbing attachments. Model # 714-849-6 features an extended steering wheel attached to enclosure crossbars to be more easily grasped by wheelchair-bound users.

MATERIALS

Platform: The platform shall be constructed with 11 ga. steel sheet perforated with a staggered pattern of 3/8" diameter holes at 5/8" apart center-to-center. The frame shall be constructed by folding edges to form 3" tall walls and shall be supported by solid welded supports of 1/4" x 1-1/2" flat steel. The platform shall be approximately 40" long with a radius of 9-7/16".

Enclosure: The enclosure shall consist of enclosure rails, uprights, and two center stubs which shall support the bottom rail. The enclosure rails shall be constructed of 3/4" x 1" oval tube. The uprights shall be constructed of 1-1/4" tube, mashed on both ends. The top and bottom rails shall be constructed of 1-1/4" tube. The arch for Model # 714-849-A shall be constructed of 1-1/4" tube. The entire assembly shall be solid welded.

Steering Wheel Mounting Bracket: # 714-849-6 only The mounting bracket shall be 11 ga. A-60 Galvannealed sheet steel welded to the wall enclosure.

Steering Wheel: # 714-849-6 only The steering wheel shall be constructed of a high density blow molded polyethylene produced from high performance, U.V. stabilized resins with a comprehensive additive package. These resins shall be tested in accordance with ASTM testing procedures D-1505, D-1248, D-1693(b), D-638, D-790, and D-746. Resin's properties shall exhibit a balance of toughness, rigidity, environmental stress crack resistance, and excellent low temperature impact performance. Wall thickness shall be 1/8". The steering wheel hub cover shall be constructed of injection molded polypropylene which shall contain U.V. light stabilizers.

Fasteners: The assembly shall contain Versalok Fasteners and Fastener Style A hardware.

Finishes: The platform shall be finishished in Mira-Therm. The enclosure and clamps shall have a Mira-Cote finish.

Consult Miracle's "Glossary of Technical Data for Materials, Processes and Finishes" for specifications of underlined items.

Kids' Choice® - Mira-Therm II™

Square Transfer Points - 3', 4', 5', 6' & 6'-6" Decks with Closed or Open Handrails

Deck systems not included in these assemblies.

714-851-39

Square Transfer Point for 3' Deck, Closed
Bottom step to exit LEFT

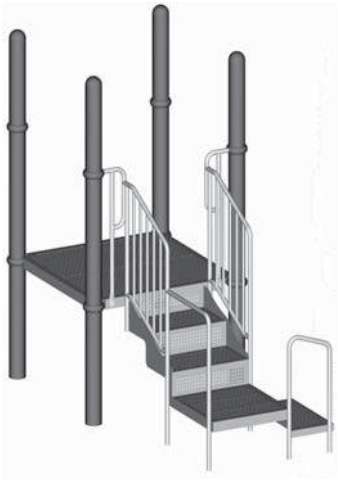

714-851-359

Square Transfer Point for 3' Deck, Open
Bottom step to exit LEFT

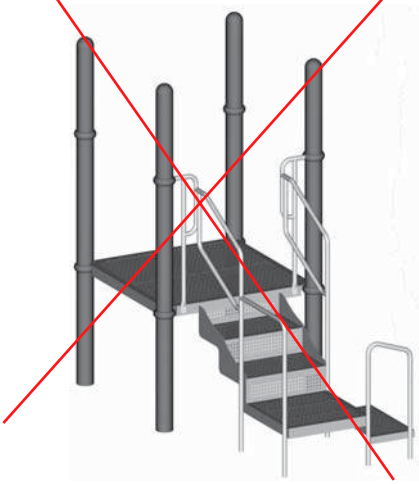

714-851-39

Square Transfer Point for 3' Deck, Closed
Bottom step to exit RIGHT

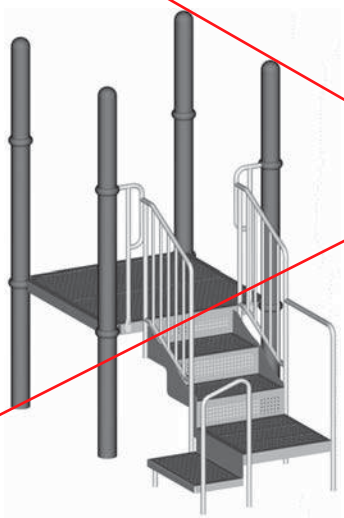

714-851-359

Square Transfer Point for 3' Deck, Open
Bottom step to exit RIGHT

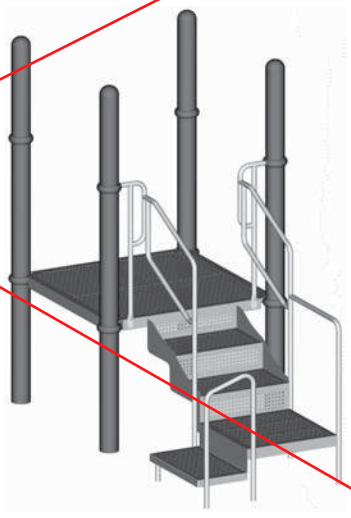

Square Transfer Points

Kids' Choice® - Mira-Therm II™

Square Transfer Points - 3', 4', 5', 6' & 6'-6" Decks with Closed or Open Handrails

Deck systems not included in these assemblies.

714-851-39

Square Transfer Point for 3' Deck, Closed
Bottom step to exit STRAIGHT
with handrail on LEFT

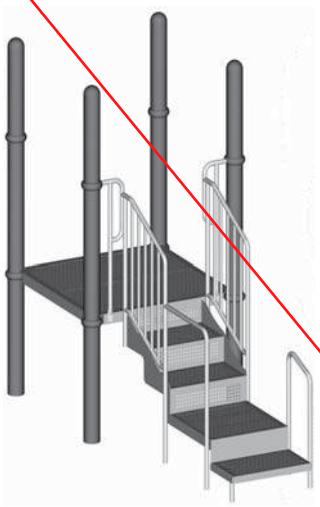

714-851-359

Square Transfer Point for 3' Deck, Open
Bottom step to exit STRAIGHT
with handrail on LEFT

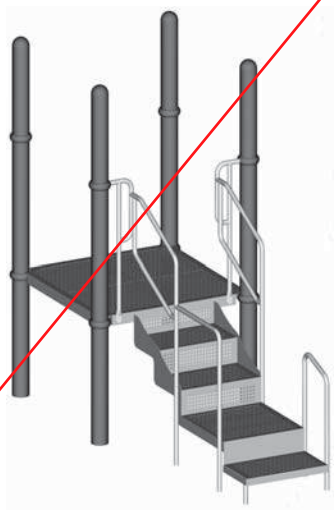

714-851-39

Square Transfer Point for 3' Deck, Closed
Bottom step to exit STRAIGHT
with handrail on RIGHT

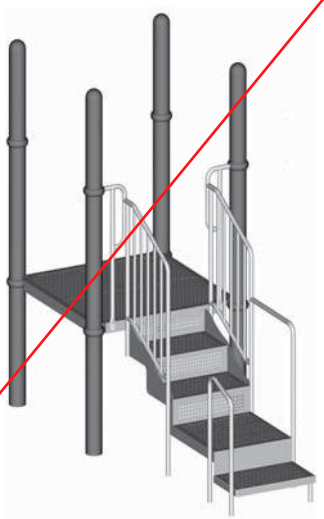

714-851-39

Square Transfer Point for 3' Deck, Open
Bottom step to exit STRAIGHT
with handrail on RIGHT

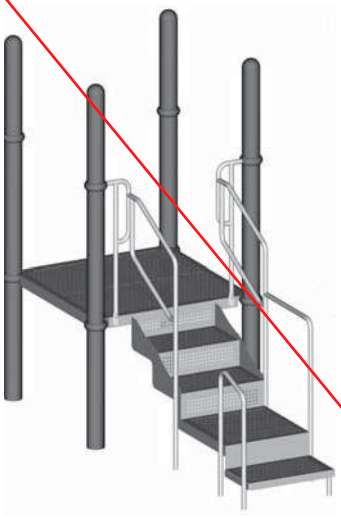

714-851-39, 714-851-359, 714-851-49, 714-851-459, 714-851-59, 714-851-69

Kids' Choice® - Mira-Therm II™

Square Transfer Points - 3', 4', 5', 6' & 6'-6" Decks with Closed or Open Handrails

Deck systems not included in these assemblies.

714-851-49

Square Transfer Point for 4' Deck, Closed
Bottom step to exit LEFT

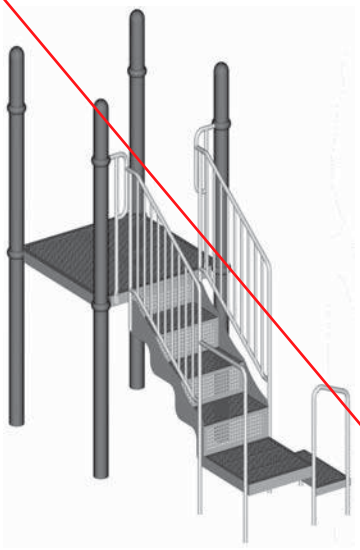

714-851-459

Square Transfer Point for 4' Deck, Open
Bottom step to exit LEFT

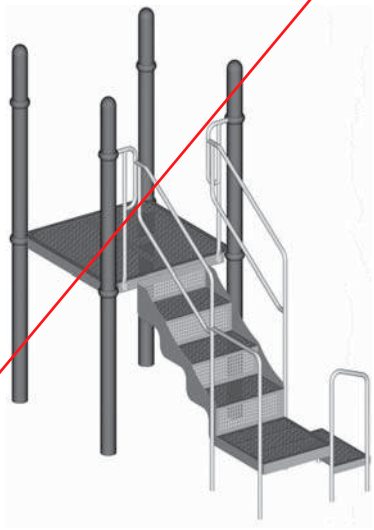

714-851-49

Square Transfer Point for 4' Deck, Closed
Bottom step to exit RIGHT

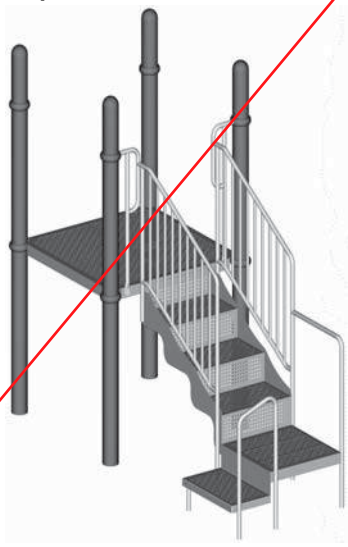

714-851-459

Square Transfer Point for 4' Deck, Open
Bottom step to exit RIGHT

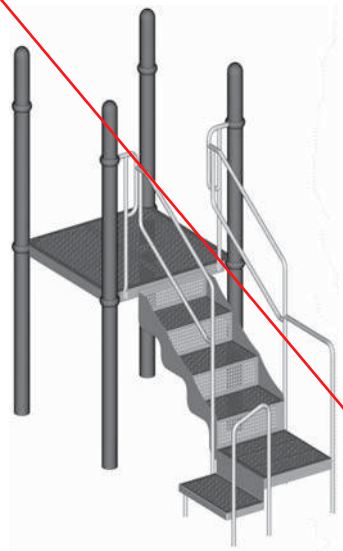

Square Transfer Points

Kids' Choice® - Mira-Therm II™

Square Transfer Points - 3', 4', 5', 6' & 6'-6" Decks with Closed or Open Handrails

Deck systems not included in these assemblies.

714-851-49

Square Transfer Point for 4' Deck, Closed
Bottom step to exit STRAIGHT
with handrail on LEFT

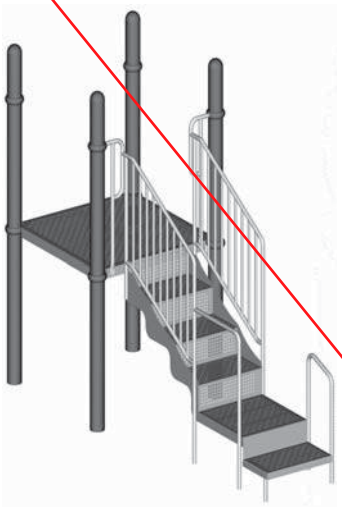

714-851-459

Square Transfer Point for 4' Deck, Open
Bottom step to exit STRAIGHT
with handrail on LEFT

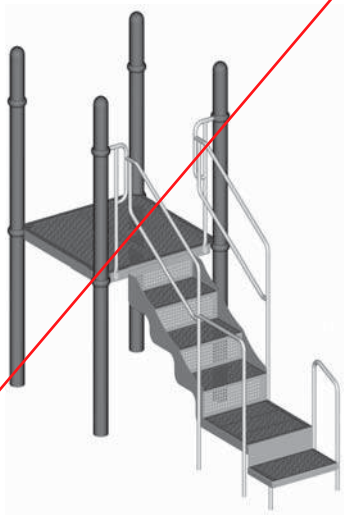

714-851-49

Square Transfer Point for 4' Deck, Closed
Bottom step to exit STRAIGHT
with handrail on RIGHT

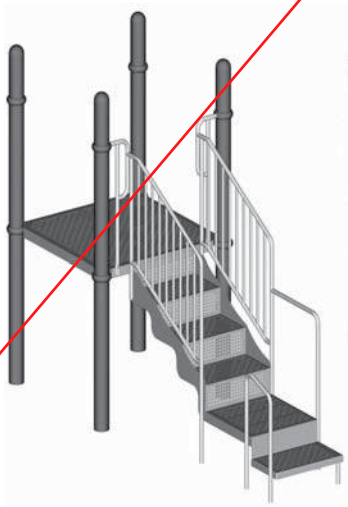

714-851-459

Square Transfer Point for 4' Deck, Open
Bottom step to exit STRAIGHT
with handrail on RIGHT

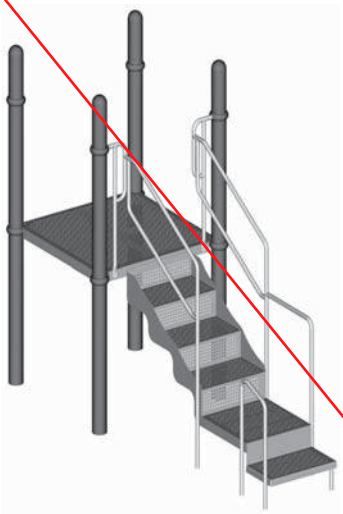

714-851-39, 714-851-359, 714-851-49, 714-851-459, 714-851-59, 714-851-69

Kids' Choice® - Mira-Therm II™

Square Transfer Points - 3', 4', 5', 6' & 6'-6" Decks with Closed or Open Handrails

Deck systems not included in these assemblies.

714-851-59

Square Transfer Point for 5' Deck, Closed Bottom step to exit LEFT

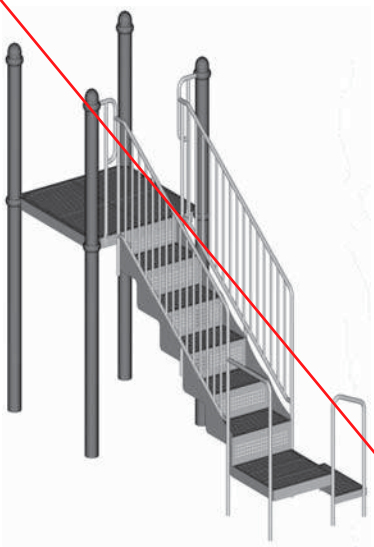

714-851-59

Square Transfer Point for 5' Deck, Closed Bottom step to exit RIGHT



714-851-59

Square Transfer Point for 5' Deck, Closed Bottom step to exit STRAIGHT with handrail on LEFT



714-851-59

Square Transfer Point for 5' Deck, Closed Bottom step to exit STRAIGHT with handrail on RIGHT

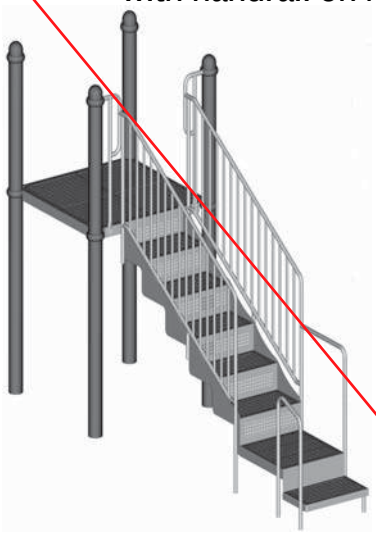

Square Transfer Points

Kids' Choice® - Mira-Therm II™

Square Transfer Points - 3', 4', 5', 6' & 6'-6" Decks with Closed or Open Handrails

Deck systems not included in these assemblies.

714-851-69

Square Transfer Point for 6' & 6'-6" Deck, Closed
Bottom step to exit LEFT

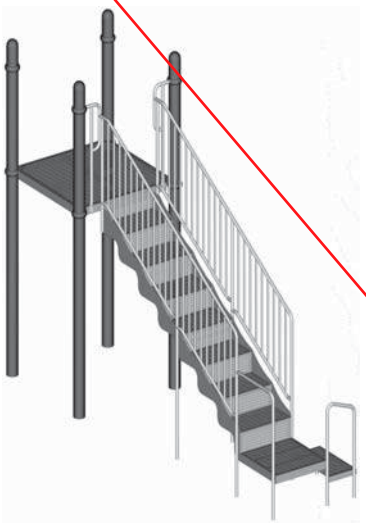

714-851-69

Square Transfer Point for 6' & 6'-6" Deck, Closed
Bottom step to exit RIGHT

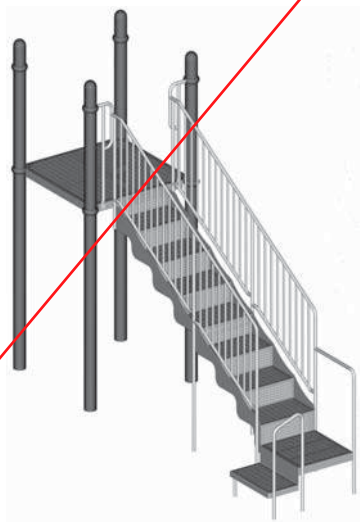

714-851-69

Square Transfer Point for 6' & 6'-6" Deck, Closed
Bottom step to exit STRAIGHT



714-851-69

Square Transfer Point for 6' & 6'-6" Deck, Closed
Bottom step to exit STRAIGHT

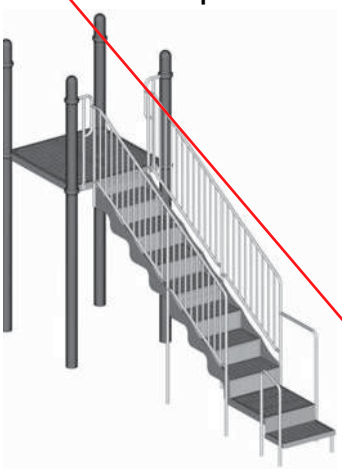

714-851-39, 714-851-359, 714-851-49, 714-851-459, 714-851-59, 714-851-69

Kids' Choice® - Mira-Therm II™

Square Transfer Points - 3', 4', 5', 6' & 6'-6" Decks with Closed or Open Handrails

Deck systems not included in these assemblies.

MODEL #	PRODUCT	ORIENTATION	GRND. SPC.	PROT. AREA	CONCRETE
714-851-39	Sqr. Transfer Point, 3' Dk, Closed	Left or Right ...	4'-9" x 4'-0"	17'-2" x 16'-0"	0.30 cu. yds.
		Straight ...	5'-10" x 3'-6"	18'-3" x 14'-11"	0.30 cu. yds.
714-851-359	Sqr. Transfer Point, 3' Dk, Open	Left or Right ...	4'-9" x 4'-0"	17'-2" x 16'-0"	0.30 cu. yds.
		Straight ...	5'-10" x 3'-6"	18'-3" x 14'-11"	0.30 cu. yds.
714-851-49	Sqr. Transfer Point, 4' Dk, Closed	Left or Right ...	5'-11" x 4'-1"	18'-4" x 16'-0"	0.30 cu. yds.
		Straight ...	7'-0" x 3'-6"	19'-5" x 14'-11"	0.30 cu. yds.
714-851-459	Sqr. Transfer Point, 4' Dk, Open	Left or Right ...	5'-11" x 4'-1"	18'-4" x 16'-0"	0.30 cu. yds.
		Straight ...	7'-0" x 3'-6"	19'-5" x 14'-11"	0.30 cu. yds.
714-851-59	Sqr. Transfer Point, 5' Dk, Closed	Left or Right ...	8'-3" x 4'-0"	20'-9" x 16'-0"	0.30 cu. yds.
		Straight ...	9'-4" x 3'-6"	21'-10" x 14'-11"	0.30 cu. yds.
714-851-69	Sqr. Transfer Point, 6' Dk, Closed	Left or Right ...	10'-8" x 4'-1"	23'-1" x 16'-0"	0.40 cu. yds.
		Straight ...	11'-9" x 3'-6"	24'-2" x 14'-11"	0.40 cu. yds.

DESCRIPTION

These models are designed to assist disabled users gain access to and egress from a deck system.

MATERIALS

Stair Assembly: Each stair assembly shall be constructed of 11 ga. steel stringers solid welded to 11 ga. steel sheet decking that is perforated in a staggered pattern of 3/8" diameter holes at 5/8" apart center-to-center. Approximate dimensions of stair assembly shall be 26" overall width, 14" deep step tread and 8" high step rise.

Transfer Point Deck: Each 26" square (approximate) transfer point deck shall be constructed of 11 ga. steel sheet folded to form approximately 3" high sidewalls. The decking shall be perforated in a staggered pattern of 3/8" diameter holes at 5/8" apart center-to-center. It shall be reinforced with cross braces of 3/16" x 2" HR flat solid welded.

Bottom Step: The bottom step shall be constructed of 11 ga. steel sheet (with folded edges) perforated in an identical pattern. The step shall be approximately 26" wide by 14" deep by 6-1/2" high.

Deck Enclosures: Deck enclosures shall be constructed of formed 1" pipe, including a welded upright of the same material. Each assembly shall be drilled for field assembly of a stair handrail, and shall have its bottom end mashed and punched for field assembly to deck.

Kids' Choice® - Mira-Therm II™

Square Transfer Points - 3', 4', 5', 6' & 6'-6" Decks with Closed or Open Handrails

Deck systems not included in these assemblies.

MATERIALS *(continued)*

Stair Handrail and Stair/Deck Handrail:	Stair handrail assemblies shall be welded upper and lower handrails of formed 1" pipe. Closed handrails shall contain vertical uprights of 3/4" x 1" oval tube welded within. Swaged handrail extensions for field assembly to handrails shall be constructed of 1" pipe. A transfer deck handrail constructed of formed 1" pipe shall be field assembled to one handrail newel upright and transfer point deck edge. Models designed for assembly to 5' and 6' or 6'-6" decks shall contain handrail sleeve supports constructed of 1-1/4" pipe, 10 ga.
Transfer Step Handrail:	The "U"-shaped transfer step handrail shall be formed 1" pipe, drilled for field assembly to transfer point deck and bottom step. Its apex shall be 36-1/8" from finished grade.
Rung Leg:	The rung leg shall be 1" pipe with ends mashed and punched for field assembly to bottom step.
Fasteners:	Each assembly shall contain Versalok Fasteners and Fastener Style A hardware.
Finishes:	The stairs, bottom step, and transfer point deck shall be finished in Mira-Therm. The deck enclosures, handrails, extensions, sleeves, and leg shall be finished in Mira-Cote.

Consult Miracle's "Glossary of Technical Data for Materials, Processes & Finishes" for specifications of underlined items.

Product Specifications

Kids' Choice®

Roofs for Square, Pentagon, Hexagon, Heptagon & Octagon Decks

Perf. Steel, Recycled Plastic or Hybrid

714-862-4 & 714-862-4R & 714-862-4H

10 Additional Models

Roof for Square Deck, Perf. Steel

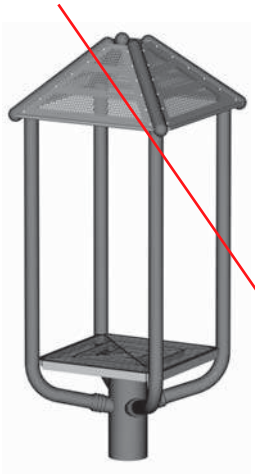

Roof for Square Deck, Recycled

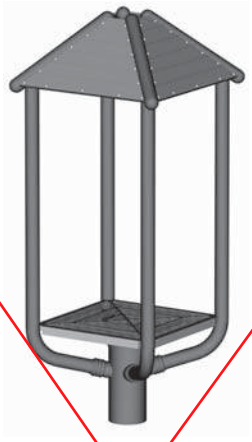

Roof for Square Deck, Hybrid (Perf. Steel & Recycled)

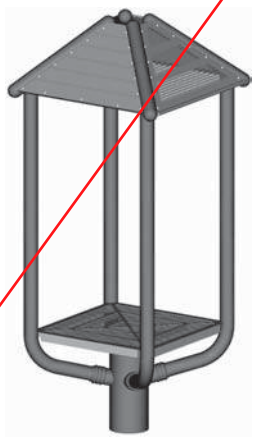

714-862-5 & 714-862-5R

8 Additional Models

Roof for Pentagon Deck, Perf. Steel



Roof for Pentagon Deck, Recycled



MIRACLE RECREATION EQUIPMENT COMPANY

Kids' Choice®

Roofs for Square, Pentagon, Hexagon, Heptagon & Octagon Decks

714-862-6 & 714-862-6R & 714-862-6H

5 Additional Models

Roof for Hexagon Deck, Perf. Steel



Roof for Hexagon Deck, Hybrid (Perf. Steel & Recycled)

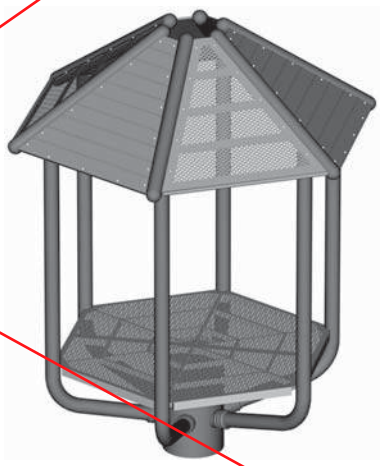

Roof for Hexagon Deck, Recycled



714-862-7 & 714-862-7R

3 Additional Models

Roof for Heptagon Deck, Perf. Steel



Roof for Heptagon Deck, Recycled



MIRACLE RECREATION EQUIPMENT COMPANY

Kids' Choice®

Roofs for Square, Pentagon, Hexagon, Heptagon & Octagon Decks

714-862-8 & 714-862-8R & 714-862-8H

10 Previous Models

Roof for Octagon Deck, Perf. Steel

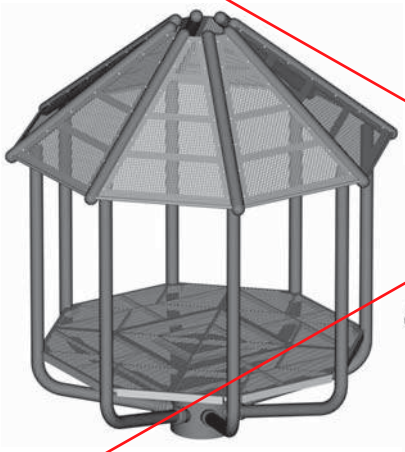

Roof for Octagon Deck, Hybrid (Perf. Steel & Recycled)



Roof for Octagon Deck, Recycled



MIRACLE RECREATION EQUIPMENT COMPANY

Kids' Choice®
Roofs for Square, Pentagon, Hexagon, Heptagon & Octagon Decks

MODEL #	PRODUCT	MODEL #	PRODUCT
714-862-4	Roof for Square Deck, Steel	714-862-4R	Roof for Square Deck, Recycled
714-862-4H	Roof for Square Deck, Hybrid	714-862-5	Roof for Pentagon Deck, Steel
714-862-5R	Roof for Pentagon Deck, Recycled	714-862-6	Roof for Hexagon Deck, Steel
714-862-6R	Roof for Hexagon Deck, Recycled	714-862-6H	Roof for Hexagon Deck, Hybrid
714-862-7	Roof for Heptagon Deck, Steel	714-862-7R	Roof for Heptagon Deck, Recycled
714-862-8	Roof for Octagon Deck, Steel	714-862-8R	Roof for Octagon Deck, Recycled
714-862-8H	Roof for Octagon Deck, Hybrid		

Note: Refer to Deck system specs for concrete, ground space and protective area requirements.

DESCRIPTION

These trussed roofs are perforated steel panel roofs, reycled plastic panel roofs, or a combination of the two types of panels, with open tops for 4, 5, 6, 7 and 8-sided Kids' Choice®, Center Stage® or City Park Series deck systems, offering superior durability in most environmental conditions.

MATERIALS

Steel Panels: The steel roof panels shall be constructed of 16 ga. A-60 Galvannealed sheet perforated with 3/16" holes in a pattern, with a formed "lip" at the panel's top edge to provide additional stability during installation. A length of 1" pipe shall be welded to the panel bottom.

Recycled Panels: The recycled roof panels shall be constructed of 100% post consumer recycled plastic and approximately 3/4" thick. A panel mount formed of 11 ga. G-90 galvanized shall be field assembled to trusses and roof panels.

Trusses: Roof truss assemblies shall be constructed of a roof mount swaged stub of either 5" tube for Kids Choice or 3-1/2" tube for Tots Choice Expansion, solid welded at a 54° angle to truss of 5" tube containing bolting tabs on both sides of 11 ga. G-90 galvanized. 5" round end caps shall close open ends of trusses.

Fasteners: All hardware shall be Fastener Style A.

Finishes: The steel roof panels and trusses shall have a Mira-Cote finish. The recycled panels shall have a natural finish. The panel mounts shall have a galvanized finish.

Consult Miracle's "Glossary of Technical Data for Materials, Processes and Finishes" for specifications of underlined items.

Product Specifications

June 15, 2006

Rev. B

MIRACLE RECREATION EQUIPMENT COMPANY

Kids' Choice®

Cupola for Heptagon and Octagon Roofs - without and with Flag Pole

For use with Roof for Heptagon Deck, Model # 714-862-7 or # 714-862-7R; or Roof for Octagon Deck, Model # 714-862-8, # 714-862-8R, or # 714-862-8H, not included in these assemblies.

714-862-7C and 714-862-7CF

Cupola for Heptagon Roof



~~714-862-8C and 714-862-8CF~~

~~Cupola with Flag Pole for Heptagon Roof~~

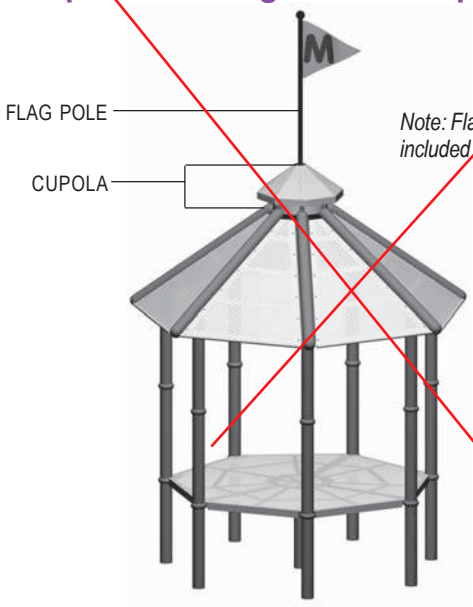

~~714-862-8C and 714-862-8CF~~

~~Cupola for Octagon Roof~~

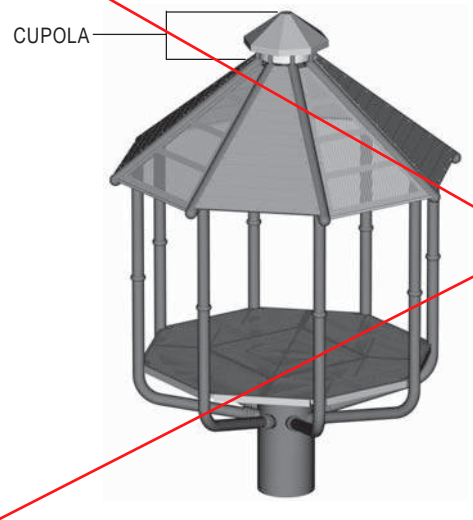

714-862-8C and 714-862-8CF

Cupola with Flag Pole for Octagon Roof

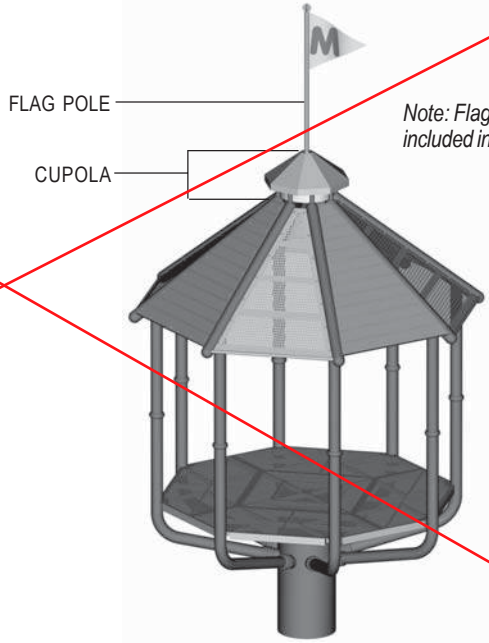

Kids' Choice®

Cupola for Heptagon and Octagon Roofs

MODEL #	PRODUCT
714-862-7C	Cupola for Heptagon Roof
714-862-7CF	Cupola with Flag Pole for Heptagon Roof
714-862-8C	Cupola for Octagon Roof
714-862-8CF	Cupola with Flag Pole for Octagon Roof

DESCRIPTION

These cupolas are designed to cap the open top of standard "Roof for Heptagon or Octagon Decks" models. Model #s 714-862-7CF and 714-862-8CF feature a flag pole with mounting brackets for a customer-provided flag (24" maximum height).

MATERIALS

Cupola Roof Assembly: The octagonal, peaked cupola roof top halves, when fastened together, shall measure 36-1/4" O.D. by 13-3/4" high with a 54° slope. Each half shall be constructed of 14 ga. HRPO black, perforated with 3/16" holes spaced 1/2" apart center-to-center in a staggered pattern, and shall be punched and solid welded. The octagonal soffit shall measure 33" O.D. (after bending to create bolting tabs on perimeter) with an 18" I.D. opening, and shall be constructed of 11 ga. sheet, punched and formed, with 3/8" weldnuts on its bottom side.

Extension Trusses: Extension trusses each shall comprise a receiver of 4.6875" O.D. by 0.188" thick tube with flange of 11 ga. A-60 Galvannealed sheet solid welded to a stub of 1-1/2" pipe capped by a 1-3/4" by 3/8" thick CRS threaded insert.

Interior Wall: The interior wall for Model #s 714-862-7C and 714-862-7CF shall be constructed of 24 ga. 304 SS sheet measuring 9-1/4" high by 69-5/8" wide (laid flat), punched and formed. The interior wall for Model #s 714-862-8C and 714-862-8CF shall be constructed of 24 ga. 304 SS sheet measuring 9-1/4" high by 76-7/8" wide (laid flat), punched and formed.

Flag Pole Assembly: Model #s 714-862-7CF and 714-862-8CF: The flag pole mounting plate shall comprise an 8" high receiver of 2" Sch 40 pipe with 3/8" weldnuts and gussets of 11 ga. black sheet on a 21-1/4" O.D. plate of 7 ga. black, all solid welded. The 72" flag pole shall be constructed of 1-1/2" pipe with cross plates of 7 ga. black sheet, formed and punched, welded to its top end and links of 4/0 straight link coil chain solid welded to its side. When assembled, the top of the flag pole shall extend approximately 65-1/2" above the cupola's peak.

Fasteners: The assembly shall contain Fastener Style A hardware and Fastener Style B hardware.

Finishes: The cupola top, soffit, extension trusses, flag pole, and flag pole mounting plate shall be finished in Mira-Cote. The interior wall shall have a stainless steel finish.

Consult Miracle's "Glossary of Technical Data for Materials, Processes & Finishes" for specifications of underlined items.

Product Specifications

MIRACLE RECREATION EQUIPMENT COMPANY

Kids' Choice®

Handring Bridges

714-864-5

8' Handring Bridge

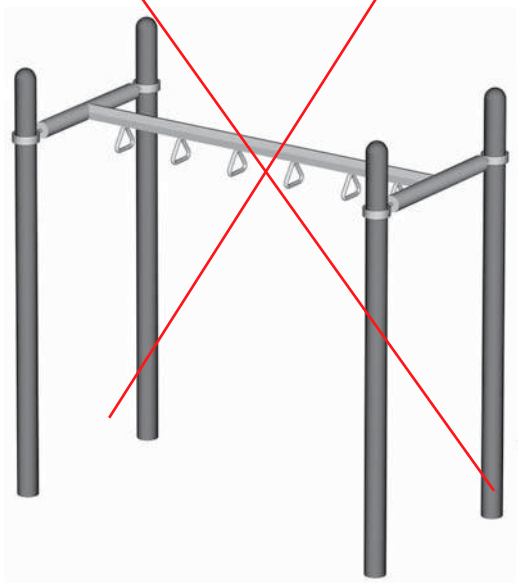

714-864-5SL

"S" Shaped Handring Bridge, Left



714-864-5SR

"S" Shaped Handring Bridge, Right



714-864-105

10' Handring Bridge

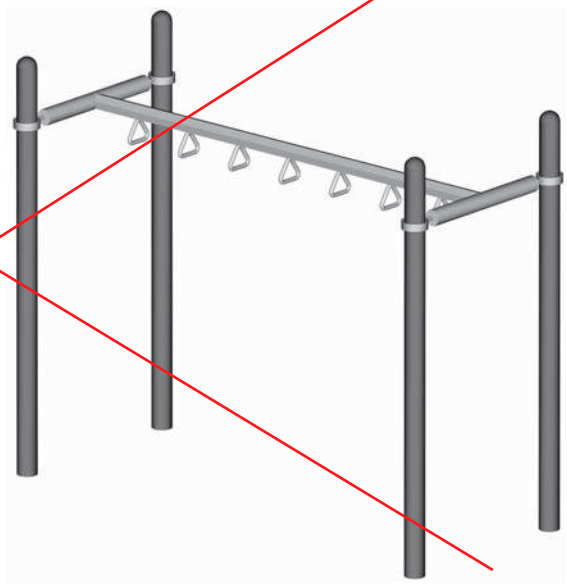

MIRACLE RECREATION EQUIPMENT COMPANY

Kids' Choice®

Handring Bridges

MODEL #	PRODUCT	GROUND SPACE	CONCRETE
714-864-5	8' Handring Bridge	4' x 8'	N/A
714-864-5SL	"S" Shaped Handring Bridge, Left	8'-6" x 8'-6"	N/A
714-864-5SR	"S" Shaped Handring Bridge, Right	8'-6" x 8'-6"	N/A
714-864-105	10' Handring Bridge	4' x 10'	N/A

DESCRIPTION:

The Handring Bridges are overhead climber assemblies designed to challenge and entertain while helping children develop upper body strength, hand-eye coordination, and other skills.

MATERIALS:

Handring Bridge Assemblies: The header assembly consists of a header beam with welded bushing sleeves and cross bars. The header beam shall be constructed of 2" pipe. The cross bars shall be constructed of 2" pipe. The bushing sleeves shall be segments of 1-1/4" OD x 9/16" ID steel pipe. The entire assembly shall be solid welded. The handrings shall be constructed of ductile iron, grade 60-40-18.

Versalok™ Fasteners: All Versalok™ Fasteners for deck and component attachment shall be aluminum alloy.

Fasteners: All hardware shall be Fastener Style A.

Finishes: The Versalok Fasteners and climber assemblies shall have a Mira-cote finish. The handrings shall be zinc plated.

Consult Miracle's "Glossary of Technical Data for Materials, Processes and Finishes" for specifications of underlined items.

Kids' Choice®

Vortex "L" Slide from 3' Deck; Right Exit

714-907-1U

"L" Slide from 3' Deck; Right



Vortex "L" Slide

Kids' Choice®

Vortex "L" Slide

MODEL #	PRODUCT	OVERALL HT.	GRND. SPC.	PROT. AREA	CONCRETE
714-907-1U	Vortex "L" Slide from 3' Deck; Right Exit	6'-2"	5' x 5'	17' x 18'	.05 cu. yds.

DESCRIPTION

The Vortex "L" slide with canopy is designed to exit right from a 3' deck.

MATERIALS

Slide and Canopy Panel: The one-piece slide shall be constructed of double-wall Rockite and shall have 6-1/4" high side rails, an overall width of 25-5/8", and an 18" wide sliding surface. The canopy panel shall also be constructed of double-wall Rockite and shall be field mounted to deck and to post clamps via a 41-1/2" long rung constructed of 1" pipe.

Leg: The leg shall be 1-1/2" tube, welded to a 7 ga. A-60 Galvannealed mounting bracket.

Fasteners: The assembly shall contain Versalok Fasteners and Fastener Style A hardware.

Finishes: The rung, leg, and clamps shall have a Mira-Cote finish. The Rockite slide and canopy shall have molded-in color.

Consult Miracle's "Glossary of Technical Data for Materials, Processes and Finishes" for specifications of underlined items.

Kids' Choice® - Mira-Therm II

12' (1:12) Ground-to-Deck Ramps- Spoked and Open Handrails

714-920-95

12' Ground-to-Deck Ramp w/Spoked Handrails

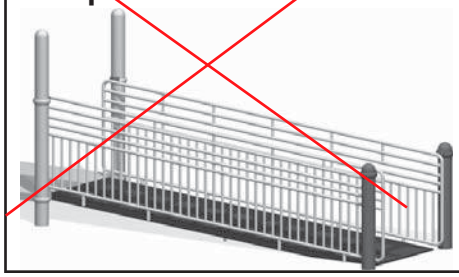

714-920-595

12' Ground-to-Deck Ramp w/Open Handrails

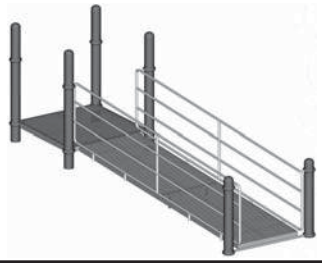

MODEL	PRODUCT	GROUND SPC.	CONCRETE
714-920-95	12' Ground-to-Deck Ramp - Spoked Handrails & Steel End Posts	12'-0" x 4'-0"	0.35 cu. yds.
714-920-595	12' Ground-to-Deck Ramp - Open Handrails & Steel End Posts	12'-0" x 4'-0"	0.35 cu. yds.

DESCRIPTION

These 12' long inclined ramp assemblies from ground level to a 1' high deck system feature steel end posts and spoked and open handrails. Same spefications for Tots' Choice Expansion models 714-920-95, 714-920-595.

MATERIALS

Ramps: The 3' x 6' ramp sections shall be constructed with folded 11 ga. steel sheet forming 3" tall sides. Decking sheets shall be perforated with a staggered pattern of 3/8" diameter holes at 5/8" apart center-to-center. The decking shall have 7 ga. by 2" flat steel braces and corner braces of 7 ga. steel. The entire assembly shall be solid welded prior to PVC coating.

Spoked Handrails: Each handrail assembly shall consist of a top and bottom rail, uprights, and leg extension stubs. The top and bottom rails shall be constructed of 1" pipe. The uprights and stubs shall be constructed of 1" tube. The entire assembly shall be solid welded. Plastic pipe plugs shall be inserted in ends of stubs.

Open Handrails: Each handrail assembly shall consist of a top, bottom, and middle rail constructed of 1" pipe. The leg extension stubs shall be 1" tube with plastic pipe plugs inserted in open ends. The middle rail shall be welded to the top rail. The entire assembly shall be solid welded.

Stub Assembly: The handrail stubs shall be constructed of 1" pipe with 3/8" aluminum inserts.

Ramp Support: The ramp support shall consist of a 41" rung of 1" pipe and a bolting plate constructed of 7 ga. G-90 galvanized sheet.

Ramp Legs: Ramp legs shall measure 59" and shall be constructed of die-formed 1-1/2" tube.

Fasteners: The assembly shall contain Versalok Fasteners and Fastener Style A hardware.

Finishes: The handrails, posts, stubs, legs, and clamps shall have a Mira-Cote finish. The ramps shall have a Mira-Therm finish.

Consult Miracle's "Glossary of Technical Data for Materials, Processes and Finishes" for specifications of underlined Items.

Product Specifications

January 12, 2006 Rev. B

Kids' Choice® - Mira-Therm II

ADA Ramp Extension

714-920E | 714-920A

ADA Ramp Extension



714-920E | **714-920A**

ADA Ramp Extension Plate

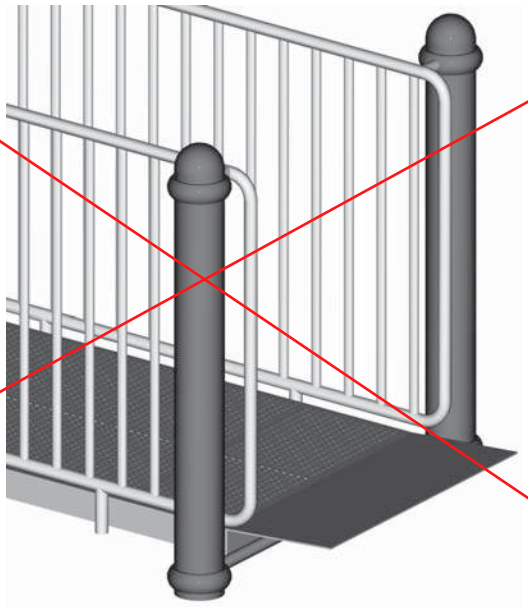

Kids' Choice® - Mira-Therm II

ADA Ramp Extension

MODEL #	PRODUCT	GROUND SPACE	CONCRETE
714-920E	ADA Ramp Extension	3' x 4'	0.05 cu. yds.
714-920A	ADA Ramp Extension Plate	1' x 3'	N/A

DESCRIPTION

The ADA Ramp Extension is designed to provide a smooth transition from ramp to finished grade on any ground-to-deck ADA ramp assembly.

MATERIALS

Ramp Extension: The ramp extension shall be constructed of 11 ga. sheet perforated with a staggered pattern of 3/8" round holes with tapered edges. The extension shall by 47-15/16" wide at its low end, 46-5/8" wide at its ramp end, and 36" wide at its apex of 3-1/ 8". The ramp extension shall contain a brace made of 1/4" flat with tabs of 1/4" x 2" flat for field attachment of leg. The entire assembly shall be solid welded.

Ramp Extension Plate: The ramp extension plate shall be constructed of 7 ga. sheet. The extension plate shall be 12" wide by 35-3/4" long. The entire assembly shall be solid welded. The extension plate shall be PVC coated.

Leg: The leg shall comprise an upright of 2" pipe solid welded to a support channel of 11 ga. A-60 Galvannealed in a "T" configuration.

Fasteners: All fasteners shall be Fastener Style A.

Finishes: The ramp extension shall be finished in Mira-Therm. The leg shall have a Mira-Cote finish.

Consult Miracle's "Glossary of Technical Data for Materials, Processes & Finishes" for specifications of underlined items.

Kids' Choice®

Ramp Deck-To-Deck 12', 1:12 MT II

714-921-9

Ramp Deck-To-Deck 12', 1:12 MT II



714-921-59

Ramp Deck-To-Deck 12', 1:12 OPN HNDRL MT II

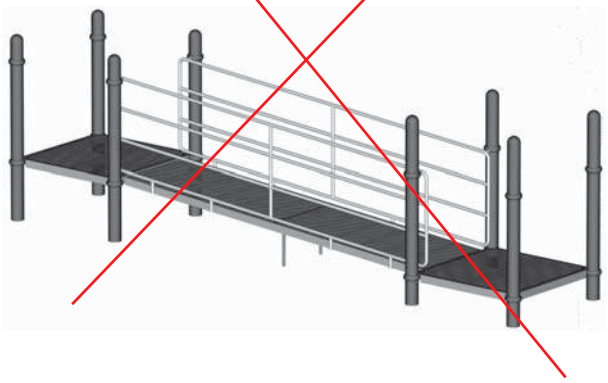

MODEL	PRODUCT	GROUND SPACE	CONCRETE
714-921-9	Ramp Deck-To-Dec 12', 1:12 MT II	4'-0" x 12'-0"	0.10 cu. yds.
714-921-59	Ramp Deck-To-Deck 12', 1:12 OPN HNDRL MT II	4'-0" x 12'-0"	0.10 cu. yds.

DESCRIPTION

The Ramp Deck-To-Deck 12', 1:12 MT II are horizontal walkways between adjacent deck systems with a 1' rise and 12' run. Spoked or open handrails enclose the ramps on both sides.

MATERIALS

Ramp Sections: Ramp sections shall be constructed of 11 ga. steel sheet perforated with a staggered pattern of 3/8" diameter holes at 5/8" apart center-to-center, with edges fold to form 3" tall walls; braces of 1/4" x 1-1/2" flat; all solid welded.

Spoked Handrails: Top and bottom rails and ramp mounting stubs shall be constructed of 1" pipe. Infill spokes shall be 3/4" x 1" oval tube. The entire assembly shall be solid welded. Plastic pipe plugs shall be inserted in open ends of stubs.

Open Handrails: Top, middle and bottom rails and ramp mounting stubs shall be constructed of 1" pipe. The entire assembly shall be solid welded. Plastic pipe plugs shall be inserted in open ends of stubs.

Clamp Ramp Stubs: Clamp ramp stubs for mounting handrails with plastic spacers to bar sockets, clamps and posts shall be constructed of 1" pipe containing 3/8" aluminum inserts.

Consult Miracle's "Glossary of Technical Data for Materials, Processes & Finishes" for specifications of underlined items.

Kids' Choice®

Ramp Deck-To-Deck 12', 1:12 MT II

MATERIALS cont.

Ramp Legs:	Support legs shall be constructed of 1-1/2" tube, mashed and punched.
Fasteners:	The assembly shall contain Versalok Fasteners and Fastener Style A hardware.
Finishes:	Ramps shall be finished in Mira-Therm II Handrails, clamps and legs shall have a Mira-Cote finish.

Consult Miracle's "Glossary of Technical Data for Materials, Processes & Finishes" for specifications of underlined items.

Product Specifications

MIRACLE RECREATION EQUIPMENT COMPANY

Kids' Choice®

Delight-O-Scope™ Telescope & Binoculars

for Mounting on **R**ockite Panels, **S**teel Wall Enclosures & **L**ookout Tower

714-961-R1 & 714-961-S1 | 714-961-L1 & 714-961-R2 | 714-961-S2 & 714-961-L2

Delight-O-Scope Telescope, Rockite Panel Mounting

Note: Deck mounting or freestanding Rockite Panel, 2-1/2" thick, with side enclosures only (no top rail) required. Model # 714-716 View Groove Panel or similar recommended.

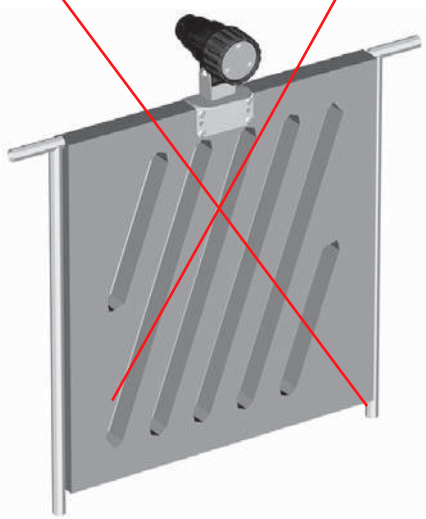

Delight-O-Scope Telescope, Steel Wall Enclosure Mounting

Note: Model # 714-816 Wall Enclosure, # 714-816-1 Wire Mesh Wall Enclosure or # 714-992-9 Kid's Perch required.



714-961-R1 & 714-961-S1 | **714-961-L1 & 714-961-R2** | 714-961-S2 & 714-961-L2

Delight-O-Scope Telescope, Lookout Tower Mounting

Note: Model # 714-992-2 Lookout Tower required.

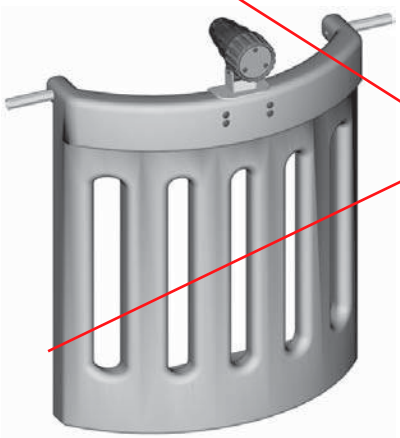

Delight-O-Scope Binoculars, Rockite Panel Mounting

Note: Deck mounting or freestanding Rockite Panel, 2-1/2" thick, with side enclosures only (no top rail) required. Model # 714-716 View Groove Panel or similar recommended.

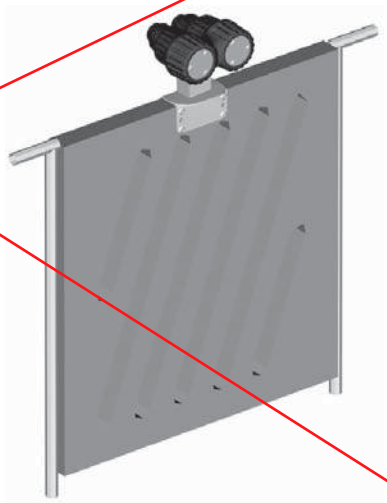

Kids' Choice®

Delight-O-Scope™ Telescope & Binoculars

Delight-O-Scope Binoculars, Steel Wall Enclosure Mounting

Note: Model # 714-816 Wall Enclosure, # 714-816-1 Wire Mesh Wall Enclosure, or # 714-992-9 Kid's Perch required.

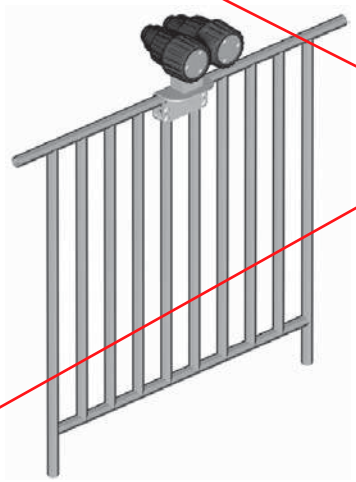

Delight-O-Scope Binoculars, Lookout Tower Mounting

Note: Model # 714-992-2 Lookout Tower required.

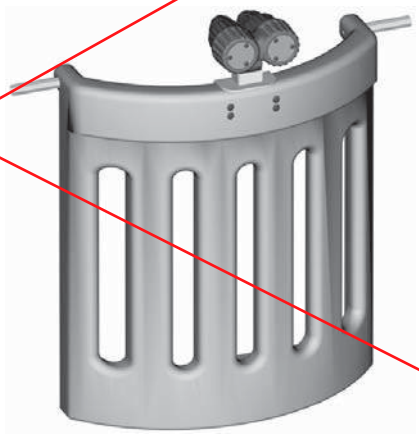

MIRACLE RECREATION EQUIPMENT COMPANY

Kids' Choice®

Delight-O-Scope™ Telescope & Binoculars

MODEL #	PRODUCT
714-961-R1	Delight-O-Scope Telescope, Rockite Panel Mounting
714-961-S1	Delight-O-Scope Telescope, Steel Wall Enclosure Mounting
714-961-L1	Delight-O-Scope Telescope, Lookout Tower Mounting
714-961-R2	Delight-O-Scope Binoculars, Rockite Panel Mounting
714-961-S2	Delight-O-Scope Binoculars, Steel Wall Enclosure Mounting
714-961-L2	Delight-O-Scope Binoculars, Lookout Tower Mounting

DESCRIPTION

Delight-O-Scopes stimulate creative play and provide visual experiences for users. The telescope features reflective facets set within the tube to offer a kaleidoscopic view, while the binocular model contains parallel tubes that constrain the user's field of vision to simulate a "search" effect, though neither model contains magnifying elements. They rotate 360 degrees horizontally and vertically between -45 and 45 degrees. These models are designed for mounting on various types of barriers.

MATERIALS

Telescope/ Binoculars: The factory-assembled telescope and binocular models shall comprise a Rockite form fastened to a support bracket of 11 ga. zinc plated connected via bronze bushing to an angular mounting bracket assembly constructed of 7 ga. zinc plated. The telescope form shall contain angular segments of mirror acrylic sheet mounted within, a clear acrylic cover at the viewpiece, and a transparent (tinted) cover of polycarbonate sheet connected at the large end. The binocular form shall contain acrylic tubes with a clear acrylic end at the eye piece and a color tinted end on the large mount end. A clear polycarbonate protective cover shall be fastened on the mount side with 1/4-20 fasteners.

Fasteners: The assemblies shall contain Fastener Style A hardware.

Finishes: The Rockite form shall have color molded in. The bracket assembly shall be finished in Mira-Cote.

Consult Miracle's "Glossary of Technical Data for Materials, Processes & Finishes" for specifications of underlined items.

Kids' Choice® - Mira-Therm II

Kids' Perch: MTII, w/Wheel MTII, w/Extended Wheel MTII

714-992-9

Kids' Perch MTII



714-992-69

Kids' Perch w/Wheel MTII



714-992-69A

Kids' Perch w/Extended Wheel MTII



MODEL	PRODUCT	GRND. SPACE	PROT. AREA	CONCRETE
714-992-9	Kids' Perch MTII	10" x 40"	N/A	N/A
714-992-69	Kids' Perch w/Wheel MTII	10" x 40"	N/A	N/A
714-992-69A	Kids' Perch w/Extended Wheel MTII	10" x 40"	N/A	N/A

DESCRIPTION

The Kids' Perch consist of a curved deck extension and a curved deck enclosure designed to enhance imaginative play. Models 714-992-69 features a steering wheel fastened to the enclosure and Model 714-992-69A features a steering wheel attached to enclosure crossbars to be more easily grasped by wheelchair-bound users.

MATERIALS

Platform: The platform shall be constructed with 11 ga. steel sheet perforated with a staggered pattern of 3/8" diameter holes at 5/8" apart center-to-center. The frame shall be constructed by folding edges to form 3" tall walls and shall be supported by solid welded supports of 1/4" x 1-1/2" flat steel. The platform shall be approximately 40" long with a radius of 9-7/16".

Enclosure: The enclosure shall consist of enclosure rails, uprights, and a center stub which shall support the bottom rail. The enclosure rails and center stub shall be constructed of 1" pipe. The crossbars shall be constructed of 1" tube. The outer uprights and mount rung shall be constructed of 1" pipe, mashed on both ends. The inner uprights shall be constructed of 3/4" x 1" oval tube. The entire assembly shall be solid welded.

Steering Wheel Mounting Bracket: The mounting bracket shall be 7 ga. G-90 Galvanized sheet steel welded to the wall enclosure.

Consult Miracle's "Glossary of Technical Data for Materials, Processes and Finishes" for specifications of underlined items.

Kids' Choice® - Mira-Therm II

Kids' Perch: MTII, w/Wheel MTII, w/Extended Wheel MTII

MATERIALS cont.

Steering Wheel:	The steering wheel shall be constructed of a high density blow molded polyethylene produced from high performance, U.V. stabilized resins with a comprehensive additive package. These resins shall be tested in accordance with ASTM testing procedures D-1505, D-1248, D-1693(b), D-638, D-790, and D-746. Resin's properties shall exhibit a balance of toughness, rigidity, environmental stress crack resistance, and excellent low temperature impact performance. Wall thickness shall be 1/8". The steering wheel hub cover shall be constructed of injection molded polypropylene which shall contain U.V. light stabilizers.
Fasteners:	The assembly shall contain Versalok Fasteners and Fastener Style A hardware.
Finishes:	The platform shall be finished in Mira-Therm. The enclosure and clamps shall have a Mira-Cote finish.

Consult Miracle's "Glossary of Technical Data for Materials, Processes and Finishes" for specifications of underlined items.

Product Specifications

Kids' Choice®
Above Deck Fun Fones™

714-994-A | 714-994-1A & 714-994-1A3* | 714-994-B | 714-994-3A

Fun Fones, Above Deck to Above Deck

Two Fun Fone Assemblies (Above Deck)
One 50' Pipe
Fasteners

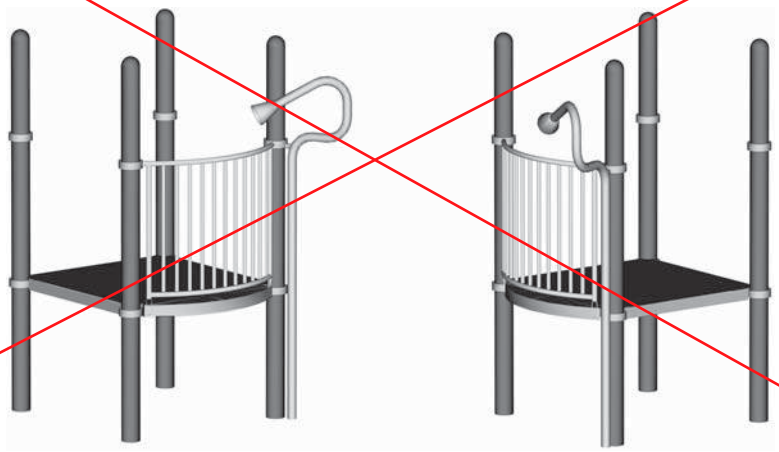

714-994-A | 714-994-1A & 714-994-1A3* | 714-994-B | 714-994-3A

Fun Fones, Above Deck to Freestanding Steel Post

* Model # 714-994-1A3 Fun fones, Above Deck to Freestanding Steel Post not shown.
Appearance is identical but material specifications differ.

One Fun Fone Assembly (Above Deck)
One Fun Fone Assembly (Ground Level)
One 76" Post
Two Clamps
One 50' Pipe
Fasteners

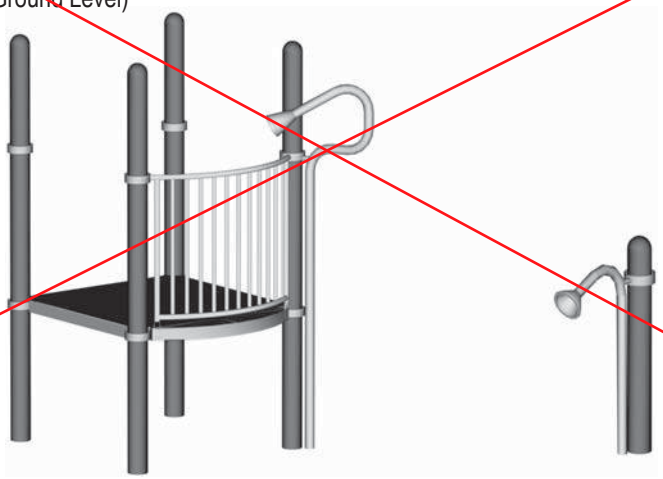

Fun Fones - Above Deck

Kids' Choice®
Above Deck Fun Fones™

714-994-A | 714-994-1A & 714-994-1A3* | **714-994-B** | 714-994-3A

Fun Fones, Above Deck to Deck Post (Ground Level)

One Fun Fone Assembly (Above Deck)
One Fun Fone Assembly (Ground Level)
Two Clamps
One 50' Pipe
Fasteners

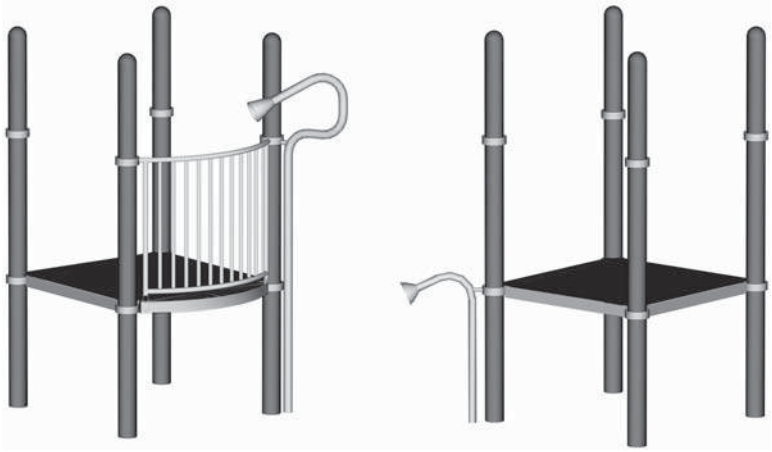

714-994-A | 714-994-1A & 714-994-1A3* | 714-994-B | **714-994-3A**

Add-A-Fone, Above Deck

One Fun Fone Assembly (Above Deck)
One Clamp
One Tee Coupling
One 50' Pipe
Fasteners

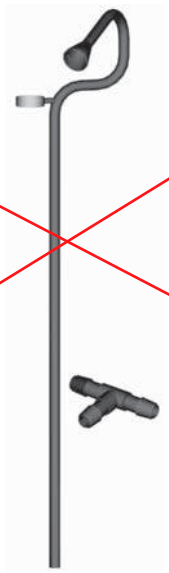

714-994-A, 714-994-1A, 714-994-1A3, 714-994-B, 714-994-3A

MIRACLE RECREATION EQUIPMENT COMPANY

Kids' Choice® Above Deck Fun Fones™

MODEL #	PRODUCT	CONCRETE
714-994-A	Fun Fones, Above Deck to Above Deck	0.50 cu. yds.
714-994-1A	Fun Fones, Above Deck to Freestanding Steel Post	0.50 cu. yds.
714-994-1A3	Fun Fones, Above Deck to Freestanding Steel Post	0.50 cu. yds.
714-994-B	Fun Fones, Above Deck to Deck Post (Ground Level)	0.50 cu. yds.
714-994-3A	Add-A-Fone, Above Deck	0.25 cu. yds.

DESCRIPTION

Fun Fones feature two mouth pieces connected by tubing so that users may speak into one piece and be heard at the other piece, mounted up to 50' away. These models are designed for attachment to deck systems mounted above a Kids Perch, Lookout Tower, or Command Post component, sold and assembled separately. The Add-A-Fone model permits additional Fun Fones to be interconnected (up to four per line maximum recommended).

MATERIALS

Fun Fone/ Support Assembly: The support assembly shall contain a mouth piece, formed tube, and mounting stub, all solid welded. The tube assembly shall be 2" pipe. The funnel-shaped mouth piece shall be 16 ga. galvanized steel. The stub shall be 1" pipe.

Anchor Assembly: The anchor assembly shall be formed 2" pipe with one end swedged and solid welded to a leg support of 1" pipe.

Tubing: The 2" I.D. tubing shall be 50' long and constructed of polyethylene.

Post: The steel post for Model # 714-994-1A shall be constructed of 5" tube, 11 ga. The steel post for Model # 714-994-1A3 shall be constructed of 5" tube. The post shall have a 5" round end cap pressed into its top end, and shall measure 76" long before the end cap.

Pipe Connectors: The pipe connectors shall be constructed of rubber and shall contain hose clamps at each end.

Fasteners: The assembly shall contain Versalok Fasteners and Fastener Style A hardware.

Finishes: The Fun Fone/support assembly, anchor assembly, post, and clamps shall have a Mira-Cote finish.

Consult Miracle's "Glossary of Technical Data for Materials, Processes & Finishes" for specifications of underlined items.

Champions Trek™ Crossway Climber - Small



454-2

Crossway Climber - Small

MODEL	PRODUCT	GROUND SPACE	PROT. AREA	CONCRETE
454-2	Crossway Climber - Small	6' x 3'	18' x 16'	0.13 cu. yds.

DESCRIPTION

The Crossway Climber is a challenging climber, with sturdy ropes and handholds, that allow children to practice balance while increasing upper and lower body strength. The climer is designed to be freestanding or can be attached to a deck.

MATERIALS

Frame:	Outer edge shall be made from 3-1/2" 8ga. tubing; vertical leg 2-3/8" 12ga. tubing; inner rungs - Gator grip; panel frame plate 7ga. sheet steel; blocks - mild steel.
Leg:	Leg shall be made from 3-1/2" 11ga. tubing; blocks - mild steel.
Feet Weldments:	End foot weldment shall be made from 3-1/2" 11ga. tubing; middle foot weldment 2-3/8" 12ga. tubing.
Panels:	Panels shall be made from 11ga. sheet steel.
Handholds:	Shall be cast alloyed aluminum.
Ropes:	Ropes shall be constructed of 16mm diameter, steel reinforced nylon braided rope with a galvanized foundation steelwork.
Fasteners:	All hardware shall be Fastener Style A.
Finishes:	The frame assembly shall have a Mira-Therm finish.

Consult Miracle's "Glossary of Technical Data for Materials, Processes and Finishes" for specifications of underlined items.

POST – DARK BROWN

ACCENTS – SAND

SENSORY PLASTIC – ORANGE, BLUE, GREEN

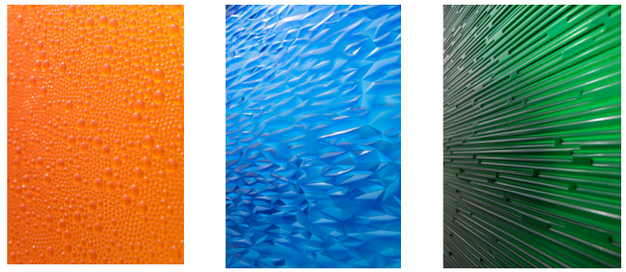

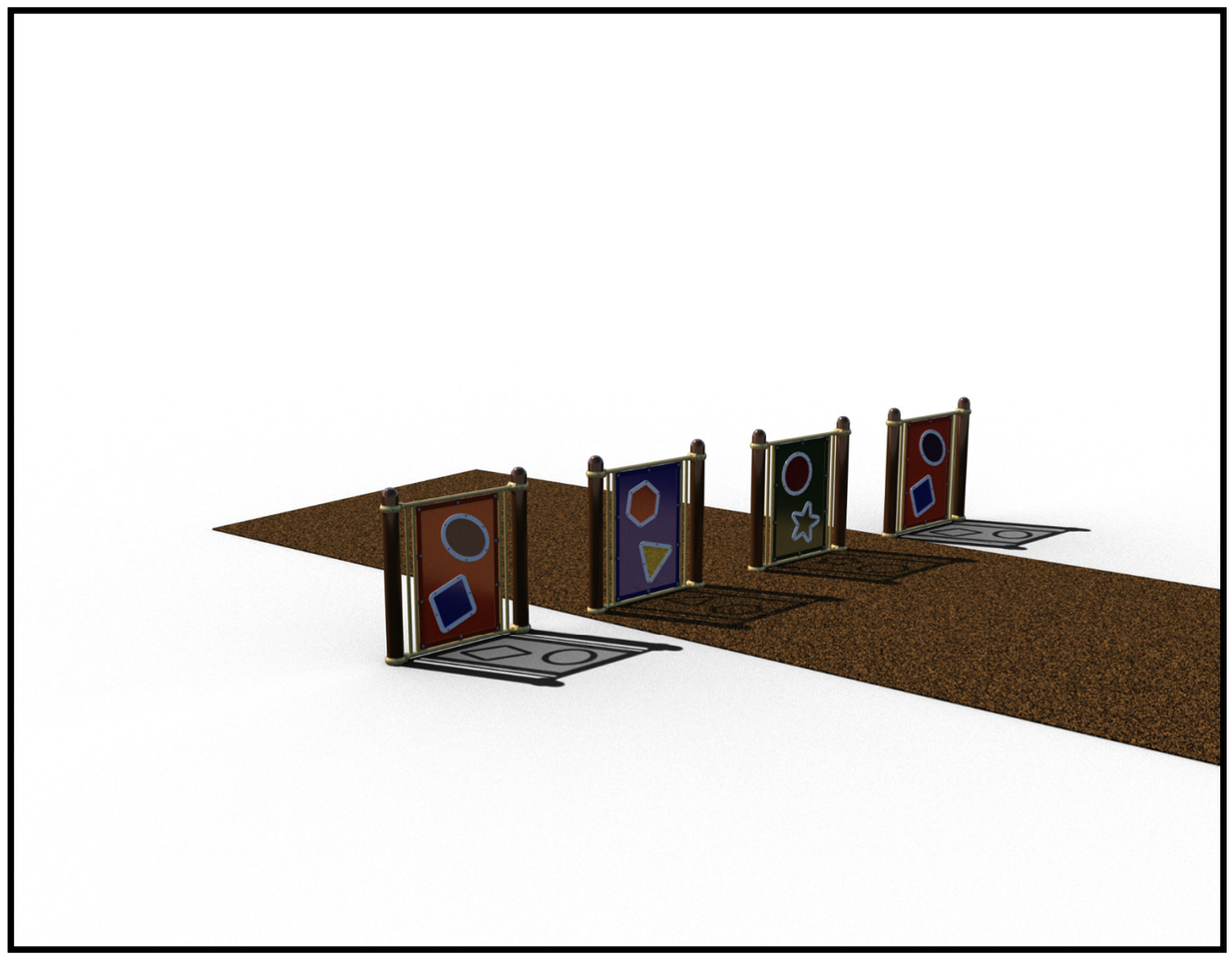

Kids' Choice®

Steel Posts (5" O.D., 11 ga. Round Tube) & Aluminum Posts

Steel Posts - 5" O.D., 11ga.

MODEL	DESCRIPTION	USES	PART NUMBER
714-545-3	144" Deck Post (Cheer Roof)	3' Deck	997292*
714-545-5	168" Deck Post (Cheer Roof)	5' Deck	997294*
714-545-6	186" Deck Post (Cheer Roof)	6'-6" Deck	908813*
714-545-8	204" Deck Post (Cheer Roof)	8' Deck	997297*
714-545-10	228" Deck Post (Cheer Roof)	10" Deck	908812*
714-549-1	88" Maze Post	Sensory Panel	925341*
714-549-3	112" Deck Post	3' Decks	995228*
714-549-4	124" Deck Post	4' Decks	995229*
714-550-3	206" Deck Post (PlayCover)	3' Deck & less	997215*
714-550-5	219" Deck Post (PlayCover)	3'-6" to 5' Decks	997218*
714-550-6	243" Deck Post (PlayCover)	5'-6" to 6'-6" Decks	997203*
714-550-8	258" Deck Post (PlayCover)	7' to 8' Decks	997315*
714-551	106" Deck Post	2'-6" Decks & less	713551*
714-552	136" Deck Post	3' to 5' Decks	713552*
714-552L	136" Deck Post w/CPSIA Label	3' to 5' Decks	996061*
714-553	160" Deck Post	5'-6" to 6'-6" Decks	713553*
714-554	178" Deck Post	7' to 8' Decks	713554*
714-556	196" Deck Post	10' Deck	985244*
714-571	106" Post (Roof)	Ground Level	713561*
714-571L	106" Post (Roof) w/CPSIA Label	Ground Level	996352*

Note: An (*) by a part number indicate: Color Code Required.

Consult Miracle's "Glossary of Technical Data for Materials, Processes and Finishes" for specifications of underlined items.

714-545-3, 714-545-5, 714-545-6, 714-545-8, 714-545-10, 714-549-1, 714-549-3, 714-549-32, 714-549-4, 714-549-42, 714-550-3, 714-550-5, 714-550-6, 714-550-8, 714-551, 714-551-2, 714-552, 714-552L, 714-552-2, 714-552-2L, 714-553, 714-553-2, 714-554, 714-554-2, 714-556, 714-571, 714-571-2, 714-571L, 714-572, 714-572-2, 714-573, 714-573-2, 714-574, 714-574-2, 714-575, 714-576, 714-576-8, 714-576-10

Kids' Choice®

Steel Posts (5" O.D., 11 ga. Round Tube) & Aluminum Posts

Steel Posts - 5" O.D., 11ga. cont.

MODEL	DESCRIPTION	USES	PART NUMBER
714-572	144" Deck Post (Roof)	3' Decks & less	713572*
714-573	168" Deck Post (Roof)	3'-6" to 5' Decks	713573*
714-574	186" Deck Post (Roof)	5'-6" to 6'-6" Decks	713574*
714-575	196" Deck Post (Uses 2 for Flippo Roof)	6'-6" Deck	985260*
714-576	204" Deck Post (Roof)	8' Deck	713818*
714-576-8	228" Deck Post (Topper)	8' Deck	994097*
714-576-10	252" Deck Post (Topper)	10' Deck	994407*

Aluminum Posts - 5" O.D.

MODEL	DESCRIPTION	USES	PART NUMBER
714-549-32	112" Deck Post	3' Decks	995230*
714-549-42	124" Deck Post	4' Decks	995231*
714-551-2	106" Deck Post	2'-6" Decks & less	713593*
714-552-2	136" Deck Post	5' Decks	713594*
714-552-2L	136" Deck Post w/CPSIA Label	5' Decks	996065*
714-553-2	160" Deck Post	5'-6" to 6'-6" Decks	713595*
714-554-2	178" Deck Post	7' to 8' Decks	713599*
714-571-2	106" Post (Roof)	Ground Level	713588*
714-572-2	144" Deck Post (Roof)	3' Decks & less	713589*
714-573-2	168" Deck Post (Roof)	3'-6" to 5' Decks	713590*
714-574-2	186" Deck Post (Roof)	5'-6" to 6'-6" Decks	713591*

Consult Miracle's "Glossary of Technical Data for Materials, Processes and Finishes" for specifications of underlined items.

714-545-3, 714-545-5, 714-545-6, 714-545-8, 714-545-10, 714-549-1, 714-549-3, 714-549-32, 714-549-4, 714-549-42, 714-550-3, 714-550-5, 714-550-6, 714-550-8, 714-551, 714-551-2, 714-552, 714-552L, 714-552-2, 714-552-2L, 714-553, 714-553-2, 714-554, 714-554-2, 714-556, 714-571, 714-571-2, 714-571L, 714-572, 714-572-2, 714-573, 714-573-2, 714-574, 714-574-2, 714-575, 714-576, 714-576-8, 714-576-10

Kids' Choice®

Steel Posts (5" O.D., 11 ga. Round Tube) & Aluminum Posts

CONCRETE 0.13 cubic yards required per post
0.26 cubic yards per post for model's 714-550-3, 714-550-5, 714-550-6 and 714-550-8.

DESCRIPTION Posts are used for support of deck systems and freestanding components.

MATERIALS

Steel Post Assembly: Steel posts shall be constructed of 5" tube, 11 ga. Posts not designed for roof assemblies shall have 5" round end caps pressed in at the factory.

Aluminum Post Assembly: Aluminum posts shall be constructed of 5" aluminum tube. Posts not designed for roof assemblies shall have 5" round end caps pressed in at the factory.

Fasteners: Components shall be field assembled to Posts by means of Versalok Fasteners, Fastener Style A hardware and/or Fastener Style B hardware.

Finishes: Post assemblies and clamps shall be finished in Mira-Cote.

Consult Miracle's "Glossary of Technical Data for Materials, Processes and Finishes" for specifications of underlined items.

714-545-3, 714-545-5, 714-545-6, 714-545-8, 714-545-10, 714-549-1, 714-549-3, 714-549-32, 714-549-4, 714-549-42, 714-550-3, 714-550-5, 714-550-6, 714-550-8, 714-551, 714-551-2, 714-552, 714-552L, 714-552-2, 714-552-2L, 714-553, 714-553-2, 714-554, 714-554-2, 714-556, 714-571, 714-571-2, 714-571L, 714-572, 714-572-2, 714-573, 714-573-2, 714-574, 714-574-2, 714-575, 714-576, 714-576-8, 714-576-10

Kids' Choice®

Sensory Panels - Below Deck

714-713-11B

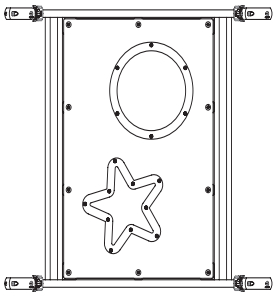

714-713-12B

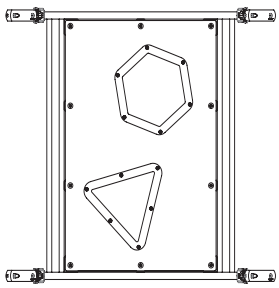

714-713-13B

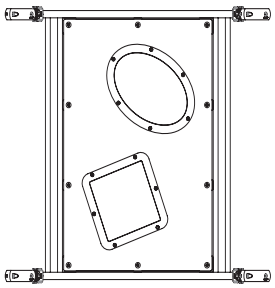

714-713-14B

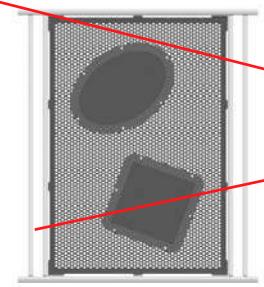

714-713-15B

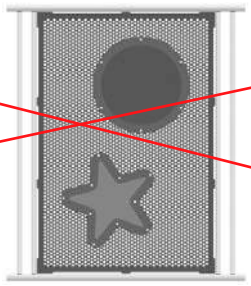

714-713-16B

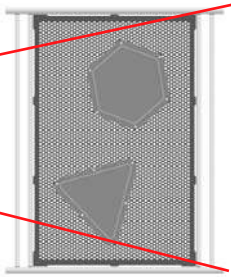

Models included:

MODEL	DESCRIPTION
714-713-11B	Sensory Panel Textured Star Circle
714-713-12B	Sensory Panel Textured Triangle Hexagon
714-713-13B	Sensory Panel Textured Square Oval
714-713-14B	KC Below Deck Oval/Square Perf. Panel
714-713-15B	KC Below Deck Star/Circle Perf. Panel
714-713-16B	KC Below Deck Hex/Triangle Perf. Panel

DESCRIPTION

These representational sensory panels, designed to enhance imagination and creative play, may be free-standing, clustered or below deck.

Consult Miracle's "Glossary of Technical Data for Materials, Processes & Finishes" for specifications of underlined items.

Sensory Panels

Kids' Choice®

Sensory Panels - Below Deck

MATERIALS

Panels:	The panel shall consist of a border plastic, plastic shape inserts and shape flanges all joined by double sided rivets.
Rivets:	The rivets shall be aluminum.
Border Plastic:	The border plastic shall be constructed of translucent colored polycarbonate.
Insert Plastic:	The insert plastic shall be constructed of translucent, colored and textured plastic.
Shape Flanges:	The shape flanges shall be constructed of 11ga. sheet steel flange
Frame:	The frame shall be constructed of Gator Grip, 1" round tube and a 13ga. sheet steel flange all solid welded.
Perforated Panels:	The perforated panel shall be constructed of 11ga. galvanized sheet.
Fasteners:	Each assembly shall contain Versalok Fasteners and Fastener Style A hardware.
Finishes:	The frame and shape frames shall have a Mira-Cote finish.

Consult Miracle's "Glossary of Technical Data for Materials, Processes & Finishes" for specifications of underlined items.

714-713-11B, 714-713-12B, 714-713-13B, 714-713-14B, 714-713-15B, 714-713-16B

This list is provided as a design aid only.
Actual compliance to accessibility standards is dependent on design and final installation and is the sole responsibility of the Sales Representative.

Accessibility Chart

Design Name:	MP250022-01-SHELTER COVE BEST BUDDIES PARK-REV C
Project:	Shelter Cove Best Buddies

Age Group : 5-12_ASTM			
Elevated Play Total	27		
Elevated Play Activites Accessible By Transfer	21	Req'd	0
Elevated Play Activites Accessible By Ramp	21	Req'd	13
Ground Level Activity Type	8	Req'd	0
Ground Level Quantity	15	Req'd	0

Description	Elevation	Access	Type Of Play	Qty
ALTA-GLIDE FLEX LINK TO KC (1' DECK)	Elevated	Ramp+Transfer	GLIDER_SPINNER_EQUIP	1
MAGICAL MUSIC PANEL INSERT	Elevated	Ramp+Transfer	SOUND_EQUIP	1
CHAM II VORTEX SLIDE 4'	Elevated	Ramp+Transfer	SLIDE	1
BONGO PERCH (STATIONARY)	Ground_Level	Ground	BALANCING_EQUIP	1
HEXS AND XS PANEL	Elevated	Ramp+Transfer	MANIPULATIVE_EQUIP	1
BONGO PERCH (STATIONARY)	Ground_Level	None	BALANCING_EQUIP	1
BONGO PERCH (STATIONARY)	Ground_Level	None	BALANCING_EQUIP	1
CHAM II VORTEX SLIDE 8'	Elevated	None	SLIDE	1
BRAIDED CLIMBER (8' DECK)	Elevated	Ramp+Transfer	CLIMBER	1
MAGICAL MUSIC PANEL INSERT	Elevated	Ramp+Transfer	SOUND_EQUIP	1
ATTIC CLIMBER	Elevated	Ramp+Transfer	CLIMBER	1
CRUNCH STATION	Ground_Level	Ground	UPPER_BODY_CLIMBER	1
FLOWER STAND PANEL (BELOW DECK)	Ground_Level	Ground	MANIPULATIVE_EQUIP	1
LOOP SEAT	Ground_Level	Ground	IMAGINATION_PANEL	1
3 BELL INSERT	Elevated	Ramp+Transfer	SOUND_EQUIP	1
"L" SLIDE RH, ROCKITE VORTEX (3' DECK)	Elevated	Ramp+Transfer	SLIDE	1
MUSEUM PIN PANEL	Elevated	Ramp+Transfer	MANIPULATIVE_EQUIP	1

Description	Elevation	Access	Type Of Play	Qty
MUSEUM WASHER STAND	Ground_Level	Ground	MANIPULATIVE_EQUIP	1
POWER PEDALER, ARMS ONLY	Ground_Level	Ground	GLIDER_SPINNER_EQUIP	1
FUN FONES ABOVE DECK TO GROUND	Ground_Level	None	VOICE_EQUIP	1
CROSSWAY CLIMBER SMALL	Elevated	Ramp+Transfer	CLIMBER	1
OVAL/SQUARE PERF PANEL - KC	Elevated	None	IMAGINATION_PANEL	1
CHUNKY TREKKER CLIMBER (FREESTANDING)	Ground_Level	Ramp+Transfer	BALANCING_EQUIP	1
ELECTRONIC ANIMAL PANEL	Elevated	Ramp+Transfer	SOUND_EQUIP	1
CHAMELEON II SPIRAL SLIDE LEFT (8' DECK)	Elevated	None	SLIDE	1
30" ID FUNNEL TUNNEL SLIDE LH W/WDW (10' DK)	Elevated	None	SLIDE	1
SENSORY PANEL TEXTURE STAR CIRCLE (BELOW DECK)	Ground_Level	Ground	IMAGINATION_PANEL	1
SENSORY PANEL TEXTURE TRIANGLE HEX (BELOW DECK)	Ground_Level	Ground	IMAGINATION_PANEL	1
DELIGHT-O-SCOPE TELESCOPE (STEEL MOUNT)	Elevated	None	MANIPULATIVE_EQUIP	1
TREE-O CLIMBER (10' DECK)	Elevated	Ramp+Transfer	CLIMBER	1
SENSORY PANEL TEXTURE SQUARE OVAL (BELOW DECK)	Ground_Level	Ground	IMAGINATION_PANEL	1
SENSORY PANEL TEXTURE SQUARE OVAL (BELOW DECK)	Ground_Level	Ground	IMAGINATION_PANEL	1
CANYON CLIMBER (10' DECK)	Elevated	Ramp+Transfer	CLIMBER	1
COMMUNICATION PANEL (BELOW DECK)	Ground_Level	Ground	IMAGINATION_PANEL	1
WIDGET PANEL W/GEARS	Elevated	Ramp+Transfer	MANIPULATIVE_EQUIP	1
GROOVE II SLIDE VORTEX (4' DECK)	Elevated	Ramp+Transfer	SLIDE	1
MUSEUM OPT ILLUSION PANEL	Elevated	Ramp+Transfer	MANIPULATIVE_EQUIP	1
ROLLER SLIDE (5' DECK)	Elevated	Ramp+Transfer	SLIDE	1
DOME CLIMBER	Elevated	Ramp+Transfer	CLIMBER	1
UPSTOP CLIMBER	Elevated	Ramp+Transfer	CLIMBER	1
"S" HANDRING BRIDGE LH	Elevated	Ramp+Transfer	UPPER_BODY_CLIMBER	1
SADDLE SEAT ANGLED POST	Ground_Level	Ground	GLIDER_SPINNER_EQUIP	1
WEBSCAPES GEMINI TWIN 4M ACTIVITY NET	Ground_Level	Ground	CLIMBER	1
DENNIS INCLUSIVE SEESAW GREEN	Ground_Level	Ground	SPRING_ROCKER	1
BARREL RIDE	Ground_Level	Ground	WHIRL	1

Age Group : 2-12_ASTM			
Elevated Play Total	0		
Elevated Play Activites Accessible By Transfer	0	Req'd	0
Elevated Play Activites Accessible By Ramp	0	Req'd	0
Ground Level Activity Type	6	Req'd	0
Ground Level Quantity	26	Req'd	0

Description	Elevation	Access	Type Of Play	Qty
INCLUSIVE WHIRL (2023)	Ground_Level	Ground	WHIRL	1
MM CURIOSITY THRILLED THE CAT	Ground_Level	Ground	MANIPULATIVE_EQUIP	1
MM MOMENTUM CORRIDOR	Ground_Level	Ground	UPPER_BODY_CLIMBER	1
MM MY CUP OF TEA	Ground_Level	Ground	MANIPULATIVE_EQUIP	1
SENSORY PANEL TEXTURE STAR CIRCLE (BELOW DECK)	Ground_Level	Ground	IMAGINATION_PANEL	1
SENSORY PANEL TEXTURE SQUARE OVAL (BELOW DECK)	Ground_Level	Ground	IMAGINATION_PANEL	1
WALL ENCLOSURE W/SEAT (BELOW DECK)	Ground_Level	Ground	IMAGINATION_PANEL	1
WALL ENCLOSURE W/SEAT (BELOW DECK)	Ground_Level	Ground	IMAGINATION_PANEL	1
SWG PART SLASH PROOF SEAT W/CHAIN (8' TR)	Ground_Level	Ground	SWING	1
SWG PART SLASH PROOF SEAT W/CHAIN (8' TR)	Ground_Level	Ground	SWING	1
3.5" MULTI-USER ARCH SWING ADD-A-BAY	Ground_Level	Ground	SWING	1
SWG PART THERAPEUTIC SEAT W/CHAIN FOR 8' TR	Ground_Level	Ground	SWING	1
GENERATION SWING	Ground_Level	Ground	SWING	1
PERCUSSION PLAY- SOPRANO QUARTET ENSEMBLE	Ground_Level	Ground	SOUND_EQUIP	4
PERCUSSION PLAY- TEMPLE BLOCK TREE	Ground_Level	Ground	SOUND_EQUIP	1
PERCUSSION PLAY- CATTAILS CHIMES	Ground_Level	Ground	SOUND_EQUIP	1
PERCUSSION PLAY- STEPPING STONES	Ground_Level	Ground	SOUND_EQUIP	6
PERCUSSION PLAY- LRG BABEL DRUM	Ground_Level	Ground	SOUND_EQUIP	1

Age Group : 2-5_ASTM			
Elevated Play Total	2		
Elevated Play Activites Accessible By Transfer	2	Req'd	1
Elevated Play Activites Accessible By Ramp	0	Req'd	0
Ground Level Activity Type	4	Req'd	1
Ground Level Quantity	11	Req'd	1

Description	Elevation	Access	Type Of Play	Qty
MC_GardenWall2_Imaginative	Ground_Level	Ground	IMAGINATION_PANEL	1
MC_GardenWall2_Manipulative	Ground_Level	Ground	MANIPULATIVE_EQUIP	4
MAGICAL MUSIC PANEL INSERT	Ground_Level	Ground	SOUND_EQUIP	1
A-MAZE-ING PANEL INSERT	Ground_Level	Ground	MANIPULATIVE_EQUIP	1
MC_Helper_Climber	Elevated	Transfer	CLIMBER	1
MC_Helper_Imaginative	Ground_Level	Ground	IMAGINATION_PANEL	2
MC_Helper_Manipulative	Ground_Level	Ground	MANIPULATIVE_EQUIP	1
MC_Helper_Slide	Elevated	Transfer	SLIDE	1
SoftPlay Mound w/ Slide & Tunnel	Ground_Level	Ground	HILL_PLAY	1

PAINTED BENCH – BEST BUDDIES GREEN

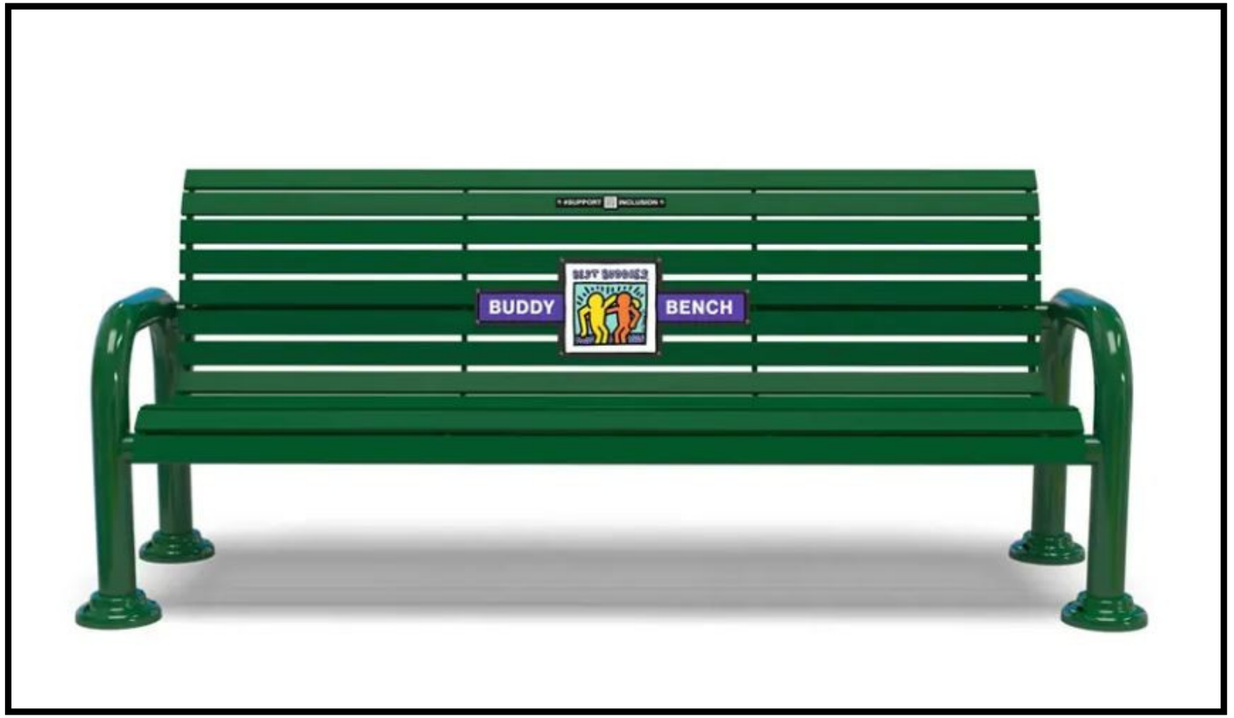

Best Buddies Bench

model no:

BB400S

SURFACE MOUNT BENCHES

maintenance:

Regular inspection and maintenance of all parts, and fasteners is necessary. Tighten all bolts and nuts. Inspect Tops, Seats, Legs, Braces and Fasteners periodically for wear or vandalism. Replace broken or worn parts immediately or take equipment out of service until repairs are made. Use genuine replacement parts.

KEEP THIS ASSEMBLY/SPECIFICATION SHEET FOR FUTURE REFERENCE.

specifications:

NOTE: We reserve the right to change specifications without notice.

Framework assemblies are finished with powder coating; electrostatically applied and oven cured according to powder manufacturer's specifications. Fasteners are stainless steel to resist corrosion.

BENCH FRAMES:
Main Inground Supports are constructed of 2 7/8" od x 12 gage and Main Surface Mount Supports are constructed of 2 7/8" od x 14 gage structural steel tubing respectively. Attach tubes are constructed of 2 3/8" od x 13 gage and 2 7/8" od x 14 gage structural steel tubing respectively. Mounting brackets on legs are 10 gage sheet steel. Surface Mount Screw–in Attachments are made of 1/4" x 8" plate steel with a 5/8" threaded stud. The mounting plate covers are made of 2 piece 319 cast aluminum.

BENCH SEATS:
The seat is constructed of 1/2" x 2" aluminum tubing. The mounting brackets are 1/4" aluminum and the reinforcing braces are 3/16" aluminum.

GENERAL:
Surface Mount Bench ground space requirements are 28" x 83 1/2". The seat is 72" long x 24 1/8" wide and 16 3/4" to the highest point and 15 1/2" to the lowest. The height of the arms are 24 1/4" and height of the seat back is 34".

assembly procedures:

IMPORTANT: Assemblers should be reasonably skilled in the assembly of commercial grade/heavy duty fabricated steel equipment.

To ensure proper assembly, it is suggested that you take adequote time to locate and identify each part. To prevent scratching of the finished pieces, we recommend this unit to be assembled on a clean, flat, solid, surface with a drop cloth, allowing plenty of working room. Also please read the instructions and study the sketches very carefully. A little extra time spent before assembly will be well worth it in performing a complete, proper assembly. Please note that all parts have been precut and pre-drilled.

During the assembly process leave all bolts and nuts "finger tight", until the entire unit is completely assembled. This allows room for movement to level or adjust all seats, tops, benches, framework and braces if necessary. After final adjustment and leveling, permanently tighten all nuts, bolts and fasteners. Glides are not to be used when surface mounting the unit.

STEP 1
Free stand both right and left legs and place them approximately the distance of the attached tubes (7413), with the round sleeves on each leg facing inward. Insert each end of the attach tubes into the sleeves. Rotate assembly upside down and assemble the screw-in attachments (7256). When completed, rotate the frame to its' upright position.

STEP 2
Lower bench, aligning the mounting bracket on each leg to the inside of the bench seat on each end. Align the holes and insert 5/16" x 1" machine screw and 5/16" nut, with two flat washers for each screw, into all holes. NOTE: It may be necessary to push/pull each leg inward/outward to bring mounting bracket on leg to inside of mounting bracket on bench.

STEP 3
Level bench, if necessary, and tighten all fasteners. If mounting plate covers (MC104) are used, place them around legs and secure with two 1/4" x 1/2" screws. Bring screws to a snug fit being careful not to over-tighten.

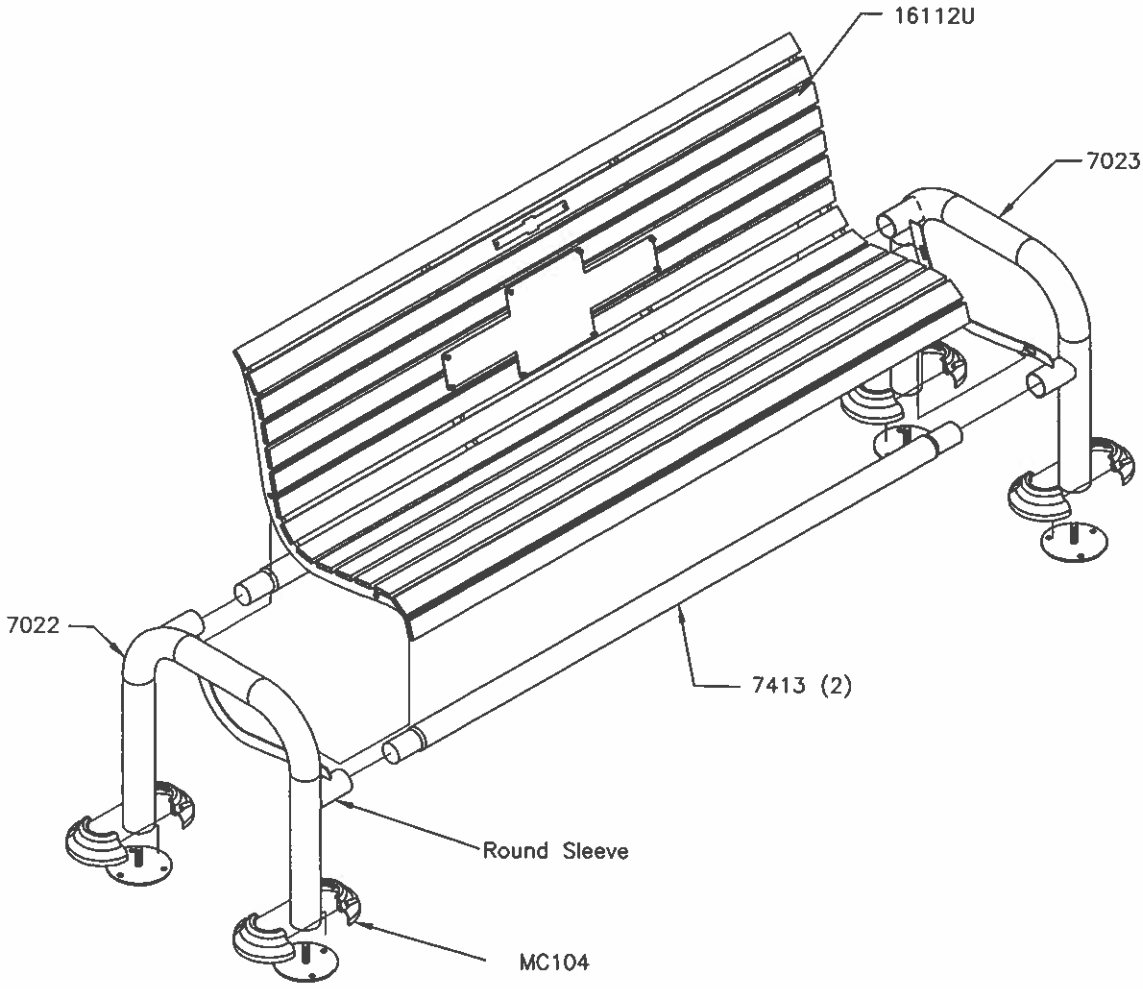

installation:

WARNING: The proper installation for products may depend upon many factors unique to the site, location, or use of a particular product. Consult with your contractor or other professional to determine your specific installation requirements.

product dimensions:

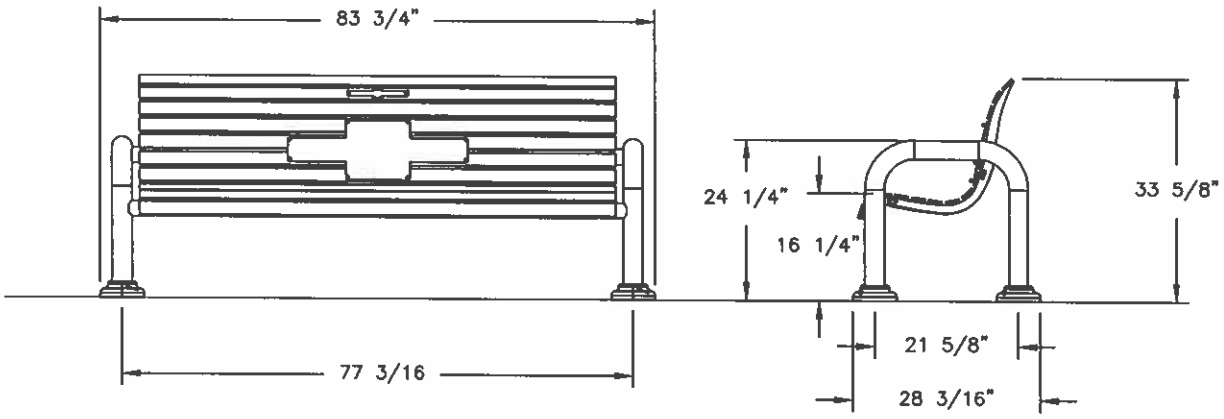

AI534A

POST – DARK BROWN

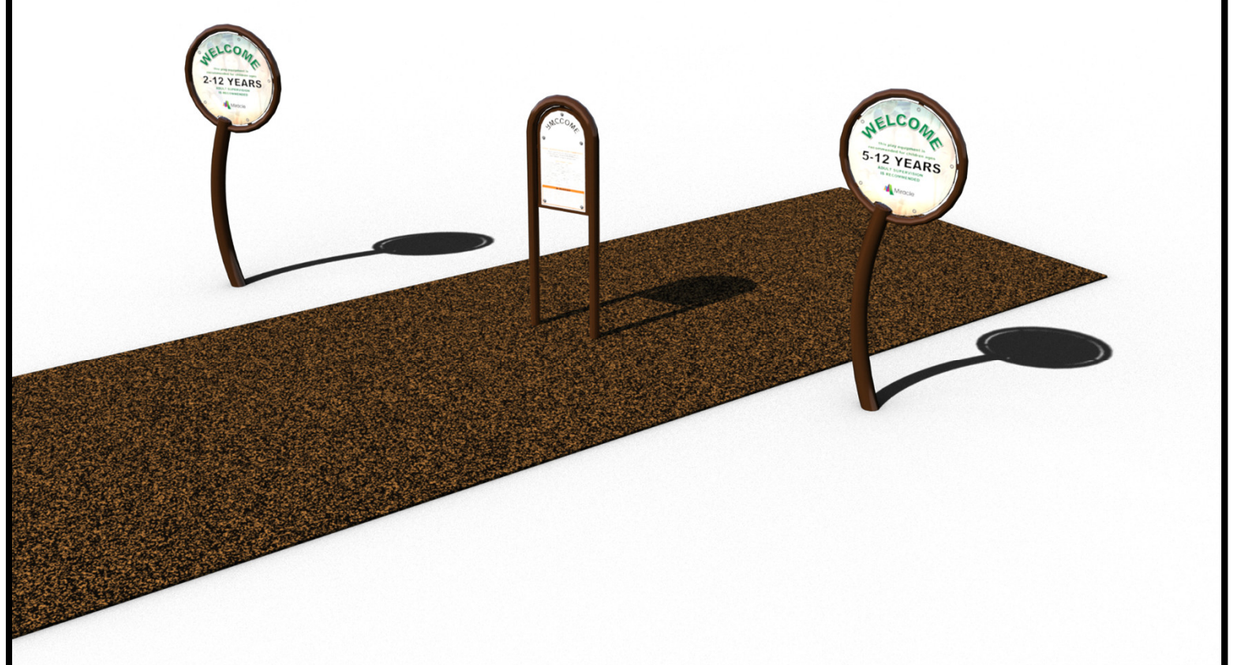

RISK MANAGEMENT SIGN -



5-12 WELCOME SIGN -



2-12 WELCOME SIGN -



Risk Management Sign



Note: English version shown.

MODEL	PRODUCT	GROUND SPACE	CONCRETE
787	Risk Management Sign - English	1'-6" x 3'-6"	0.09 cu. yd.
787FR	Risk Management Sign - French	1'-6" x 3'-6"	0.09 cu. yd.
787FRENG	Risk Management Sign - French/English	1'-6" x 3'-6"	0.09 cu. yd.
787SP	Risk Management Sign - Spanish	1'-6" x 3'-6"	0.09 cu. yd.
787BD	Risk Management Sign - English Surface MT	1'-6" x 3'-6"	site specific
787BDFR	Risk Management Sign - French Surface MT	1'-6" x 3'-6"	site specific
787BDFRENG	Risk Management Sign - French/English SM	1'-6" x 3'-6"	site specific
787BDSP	Risk Management Sign - Spanish Surface MT	1'-6" x 3'-6"	site specific

DESCRIPTION

The Risk Management Sign is intended to inform the parents and children that adult supervision is recommended, along with smart play on the equipment in the play area.

MATERIAL

Sign: Fiberglass embedded, gloss finish, 0.125" thick.

Steel Frame: 2-3/8" OD 12 gauge galvanized steel tubing, 13 gauge galvanized steel sheet for mounting sign, and 3/8" thick hot rolled steel base plate on each leg.

Extension Tube: 2.375 12GA GLV-IL X 24' tube round.

Hardware: Stainless steel that requires tooling to install or remove.

Finish: The frame shall have a Mira-Cote finish.

Welcome Sign - English, CSA, Spanish and SGL/DBL Sided Post

In-Ground and Surface Mount

Single Sided Post

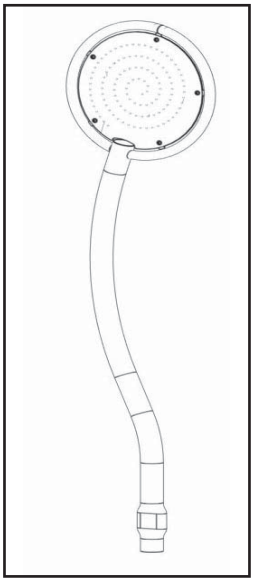

Double Sided Post

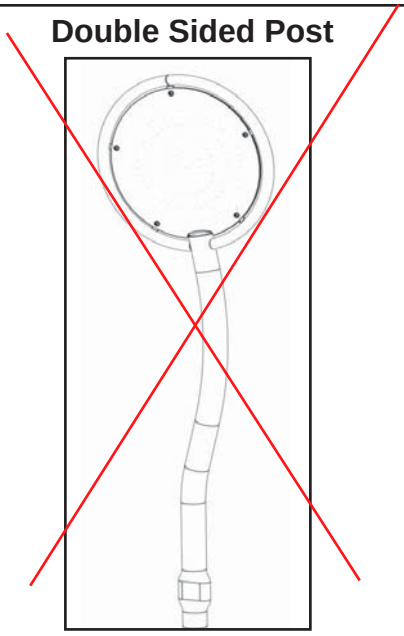

MODEL	PRODUCT	GRND. SPC.	PROT. AREA	CONCRETE
787-001	MREC Welcome Sign 2-5YR	1'-6" x 2'-6"	N/A	0.10 cu. yds.
787-001BD	MREC Welcome Sign 2-5YR	1'-6" x 2'-6"	N/A	0.10 cu. yds.
787-002	MREC Welcome Sign 2-12YR	1'-6" x 2'-6"	N/A	0.10 cu. yds.
787-002BD	MREC Welcome Sign 2-12YR	1'-6" x 2'-6"	N/A	0.10 cu. yds.
787-003	MREC Welcome Sign 5-12YR	1'-6" x 2'-6"	N/A	0.10 cu. yds.
787-003BD	MREC Welcome Sign 5-12YR	1'-6" x 2'-6"	N/A	0.10 cu. yds.
787-011	MREC Welcome Sign French/Eng 18MO-5YR	1'-6" x 2'-6"	N/A	0.10 cu. yds.
787-011BD	MREC Welcome Sign French/Eng 18MO-5YR	1'-6" x 2'-6"	N/A	0.10 cu. yds.
787-012	MREC Welcome Sign French/Eng 18MO-12YR	1'-6" x 2'-6"	N/A	0.10 cu. yds.
787-012BD	MREC Welcome Sign French/Eng 18MO-12YR	1'-6" x 2'-6"	N/A	0.10 cu. yds.
787-013	MREC Welcome Sign French/Eng 5-12YR	1'-6" x 2'-6"	N/A	0.10 cu. yds.
787-013BD	MREC Welcome Sign French/Eng 5-12YR	1'-6" x 2'-6"	N/A	0.10 cu. yds.
787-021	MREC Welcome Sign Spanish 2-5YR	1'-6" x 2'-6"	N/A	0.10 cu. yds.
787-021BD	MREC Welcome Sign Spanish 2-5YR	1'-6" x 2'-6"	N/A	0.10 cu. yds.
787-022	MREC Welcome Sign Spanish 2-12YR	1'-6" x 2'-6"	N/A	0.10 cu. yds.
787-022BD	MREC Welcome Sign Spanish 2-12YR	1'-6" x 2'-6"	N/A	0.10 cu. yds.
787-023	MREC Welcome Sign Spanish 5-12YR	1'-6" x 2'-6"	N/A	0.10 cu. yds.
787-023BD	MREC Welcome Sign Spanish 5-12YR	1'-6" x 2'-6"	N/A	0.10 cu. yds.
787-091	MREC Custom Sign SGL Sided	1'-6" x 2'-6"	N/A	0.10 cu. yds.
787-091BD	MREC Custom Sign SGL Sided	1'-6" x 2'-6"	N/A	0.10 cu. yds.
787-092	MREC Custom Sign DBL Sided	1'-6" x 2'-6"	N/A	0.10 cu. yds.
787-092BD	MREC Custom Sign DBL Sided	1'-6" x 2'-6"	N/A	0.10 cu. yds.

Consult Miracle's "Glossary of Technical Data for Materials, Processes & Finishes" for specifications of underlined items.

787-001, 787-001BD, 787-002, 787-002BD, 787-003, 787-003BD, 787-011, 787-011BD, 787-012, 787-012BD, 787-013, 787-013BD, 787-021, 787-021BD, 787-022, 787-022BD, 787-023, 787-023BD, 787-091, 787-091BD, 787-092, 787-092BD

Welcome Sign

Welcome Sign - English, CSA, Spanish and SGL/DBL Sided Post

In-Ground and Surface Mount

DESCRIPTION

The Welcome Sign displays the age range of intended users in English, French Canadian/English (CSA) and Spanish with single or doubled sided posts.

MATERIALS

Sign Post: Sign posts, each, shall be constructed of 3.5" tube, 1-5/8" tube and plate of 12ga. A-60 Galvannealed sheet and solid welded.

Sign: The sign panel shall be a fiberglass embedment sign with an approximate graphics area of 23" and approx. 0.09" thick. This sign will have a tensile strength of 12,000 psi, a compressive strength of 20,000 psi, a flexural strength of 18,000 psi, an impact strength of 6 ft.lbs/inch notch, a barcol hardness of 50 and a modulus of elasticity of 2,000,000 psi. The sign shall have an excellent resistance to mild acids, a fair resistance to alkalis and an excellent resistance to solvents.

Fasteners: The assembly shall container Fastener Style A hardware.

Finishes: Sign posts shall have a Mira-Cote finish.

Consult Miracle's "Glossary of Technical Data for Materials, Processes & Finishes" for specifications of underlined items.

787-001, 787-001BD, 787-002, 787-002BD, 787-003, 787-003BD, 787-011, 787-011BD, 787-012, 787-012BD, 787-013, 787-013BD, 787-021, 787-021BD, 787-022, 787-022BD, 787-023, 787-023BD, 787-091, 787-091BD, 787-092, 787-092BD

BEST BUDDIES PARK - REV C
HILTON HEAD, SC - OVERALL PLAYGROUND LAYOUT

2-5 PLAY AREA

ELEVATED PLAY ACTIVITIES - TOTAL	2		
ELEVATED PLAY ACTIVITIES ACCESSIBLE BY TRANSFER	2	REQ'D	1
ELEVATED PLAY ACTIVITIES ACCESSIBLE BY RAMP	0	REQ'D	0
GROUND LEVEL ACTIVITY TYPE	4	REQ'D	1
GROUND LEVEL ACTIVITY QUANTITY	11	REQ'D	1

REPRESENTS PLAY AREA ONLY

AREA: 11,700 SQ.FT.
PERIMETER: 258'
The information provided is for estimation purposes only.

Play Area Capacity: 390-410

2-12 PLAY AREA

ELEVATED PLAY ACTIVITIES - TOTAL	0		
ELEVATED PLAY ACTIVITIES ACCESSIBLE BY TRANSFER	0	REQ'D	0
ELEVATED PLAY ACTIVITIES ACCESSIBLE BY RAMP	0	REQ'D	0
GROUND LEVEL ACTIVITY TYPE	6	REQ'D	0
GROUND LEVEL ACTIVITY QUANTITY	26	REQ'D	0

5-12 PLAY AREA

ELEVATED PLAY ACTIVITIES - TOTAL	27		
ELEVATED PLAY ACTIVITIES ACCESSIBLE BY TRANSFER	21	REQ'D	0
ELEVATED PLAY ACTIVITIES ACCESSIBLE BY RAMP	21	REQ'D	13
GROUND LEVEL ACTIVITY TYPE	8	REQ'D	0
GROUND LEVEL ACTIVITY QUANTITY	15	REQ'D	0

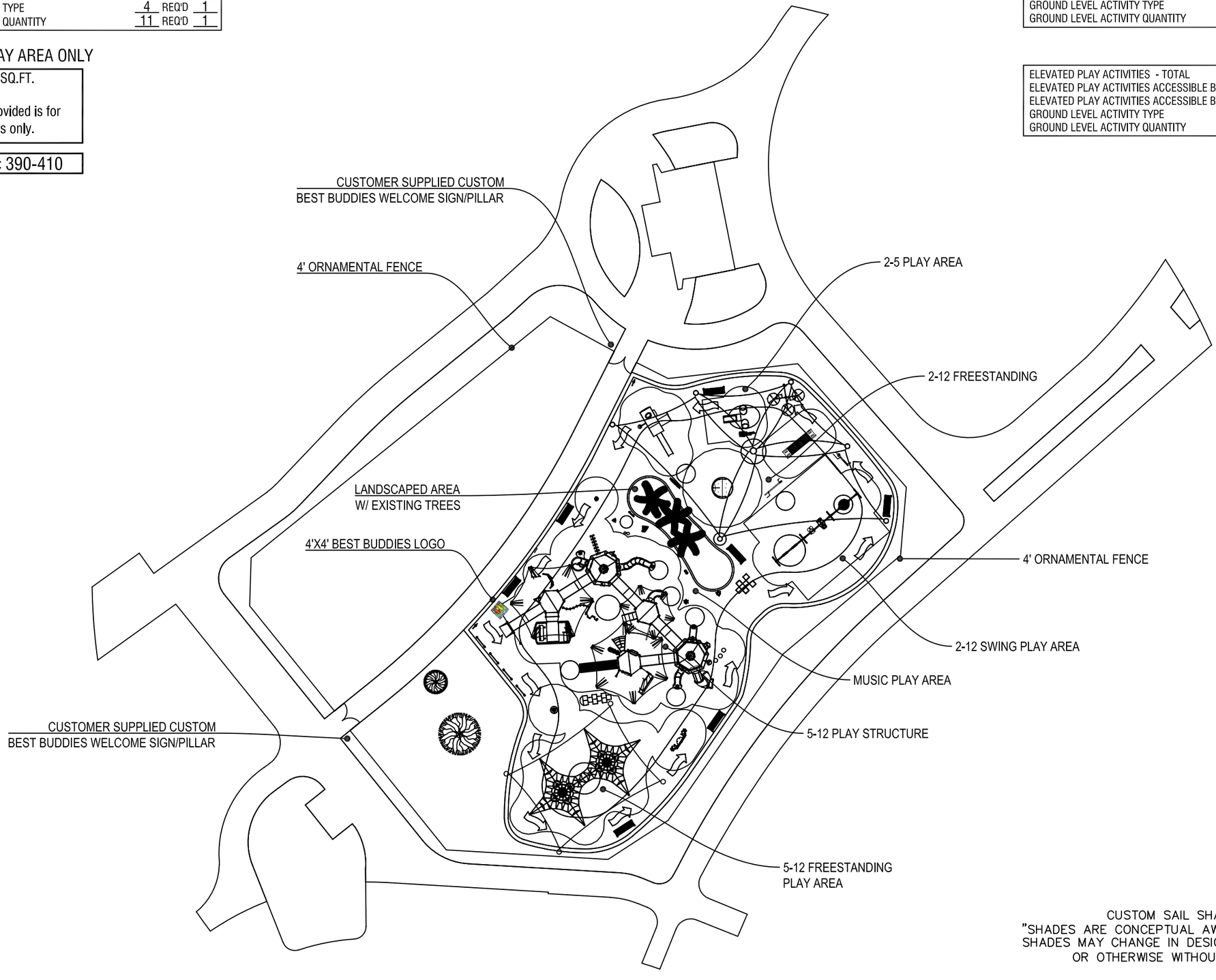

CUSTOM SAIL SHADE
"SHADES ARE CONCEPTUAL AWAITING APPROVAL. SHADES MAY CHANGE IN DESIGN, STYLE, HEIGHT OR OTHERWISE WITHOUT NOTICE."

Miracle

DESIGNED FOR AGES
2-5, 2-12 & 5-12

ADDITIONAL GROUND LEVEL ACCESSIBLE ITEMS NEEDED FOR ADA COMPLIANCE

TYPE:	QUANTITY:
0	0

- ✓ COMPLIES TO CPSC
- ✓ COMPLIES TO ASTM
- ✓ COMPLIES TO ADA

GROUND SPACE:	PROTECTIVE AREA:
N/A	NOTED

AN ENERGY ABSORBING PROTECTIVE SURFACE IS REQUIRED UNDER & AROUND ALL PLAY SYSTEMS.

JM

SHEET: 11"X17"

SCALE: N.T.S.

DATE: 3/14/2025

MP250022-02-1

To promote safe and proper equipment use by children, Miracle recommends the installation of either a Miracle safety sign or other appropriate safety signage near each playsystem's main entry point(s) to inform parents and supervisors of the age appropriateness of the playsystem and general rules for safe play.

BEST BUDDIES PARK - REV C
HILTON HEAD, SC - 5-12 PLAY STRUCTURE DETAIL

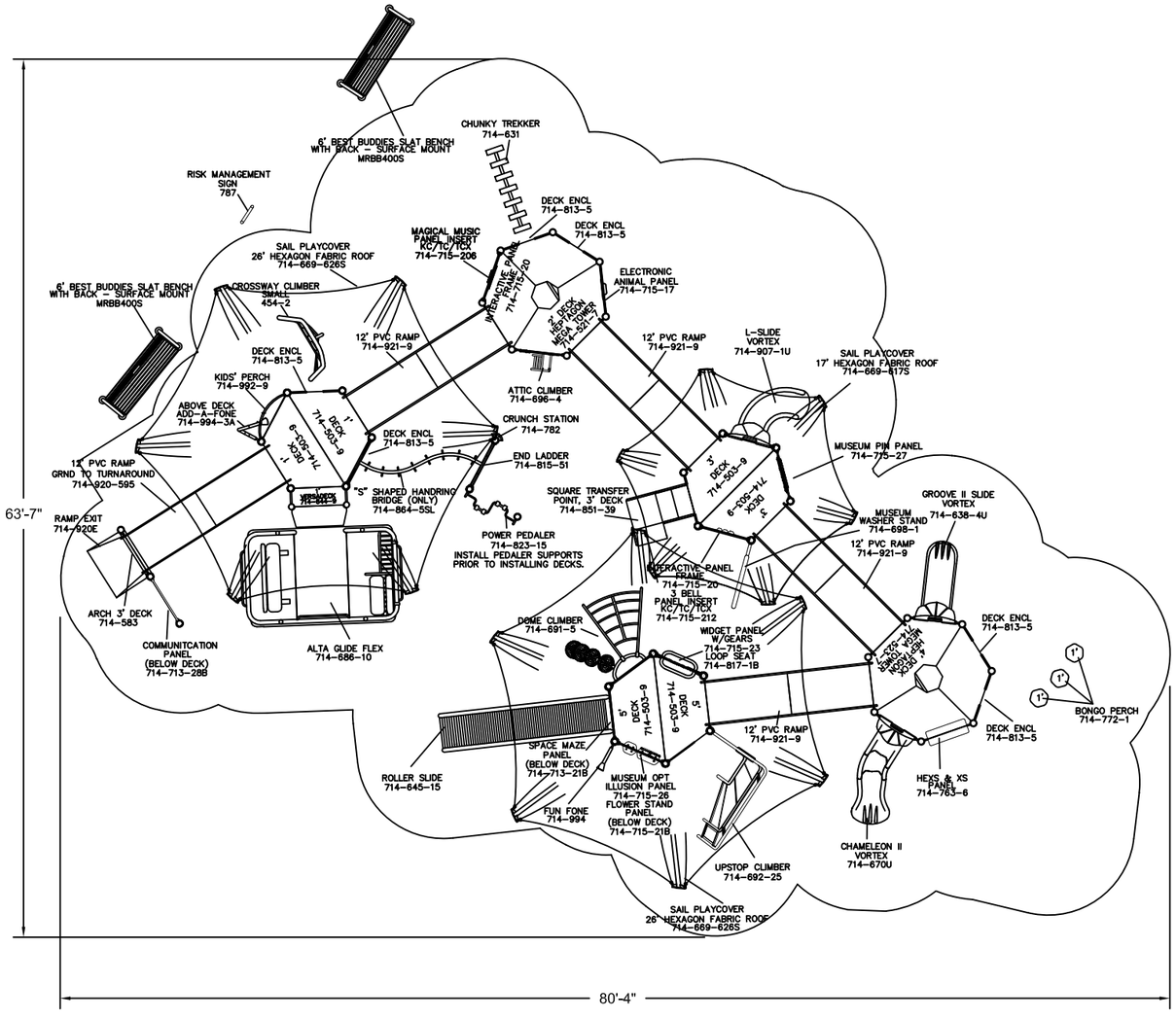

MEGA TOWER
STRUCTURE LEVEL 1

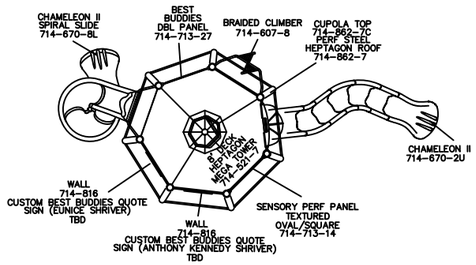

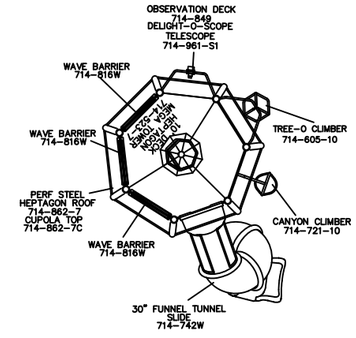

MEGA TOWER
STRUCTURE LEVEL 2

Miracle

DESIGNED FOR AGES
5-12

ADDITIONAL GROUND LEVEL ACCESSIBLE ITEMS NEEDED FOR ADA COMPLIANCE

TYPE:	QUANTITY:
0	0

- ✓ COMPLIES TO CPSC
- ✓ COMPLIES TO ASTM
- ✓ COMPLIES TO ADA

GROUND SPACE:	PROTECTIVE AREA:
N/A	NOTED

INTERNATIONAL PLAY EQUIPMENT MANUFACTURERS ASSOCIATION
PUBLIC PLAY EQUIPMENT
IPEMA CERTIFIED TO ASTM F1487

To verify product certification, visit www.ipema.org

THE PLAY COMPONENTS IDENTIFIED IN THIS PLAN ARE IPEMA CERTIFIED. THE USE AND LAYOUT OF THESE COMPONENTS CONFORM TO THE REQUIREMENTS OF ASTM F1487.

AN ENERGY ABSORBING PROTECTIVE SURFACE IS REQUIRED UNDER & AROUND ALL PLAY SYSTEMS.

JM

SHEET: 11"X17"

SCALE: 3/32"=1'-0"

DATE: 3/14/2025

MP250022-02-2

To promote safe and proper equipment use by children, Miracle recommends the installation of either a Miracle safety sign or other appropriate safety signage near each playsystem's main entry point(s) to inform parents and supervisors of the age appropriateness of the playsystem and general rules for safe play.

BEST BUDDIES PARK - REV C
HILTON HEAD, SC - 5-12 FREESTANDING & 2-12 MUSIC PLAY DETAIL

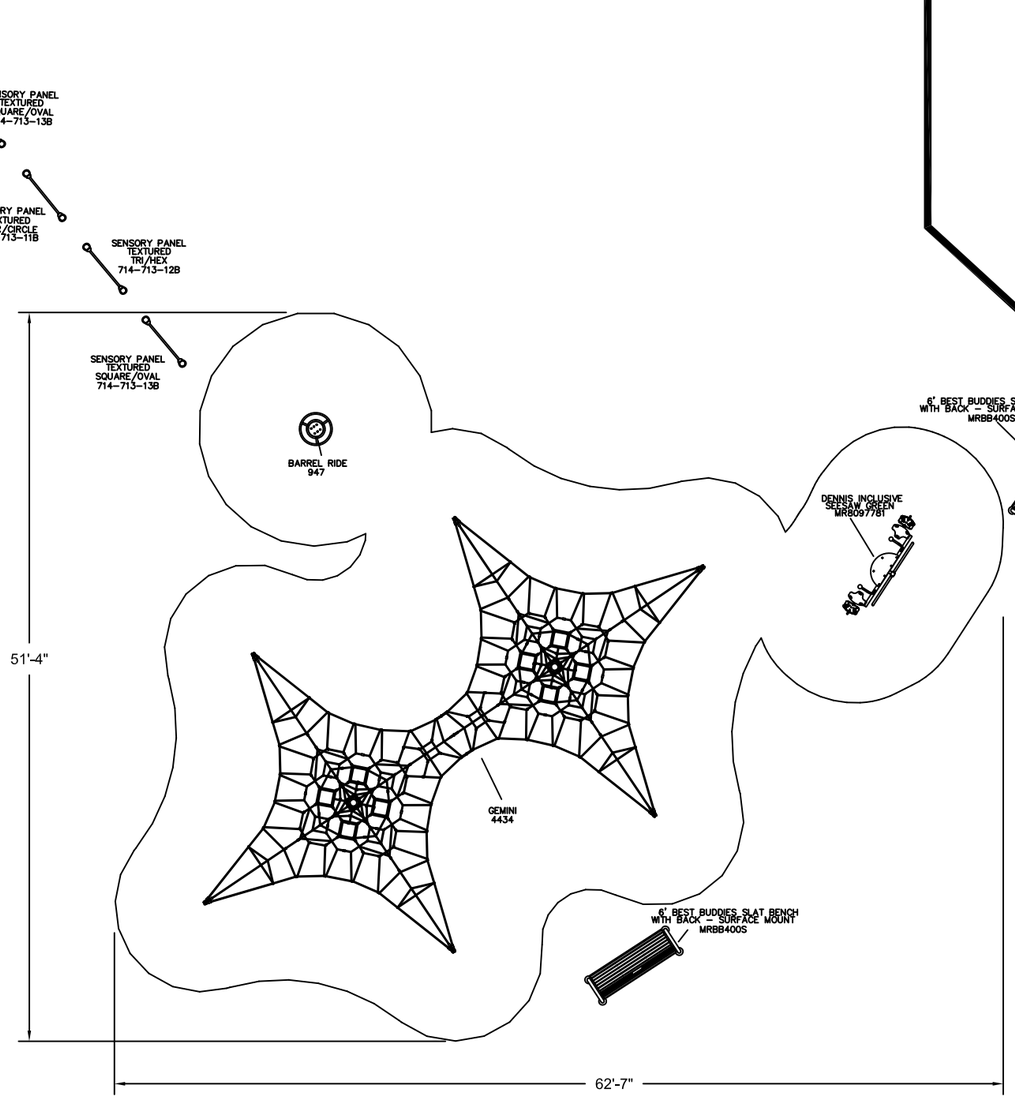

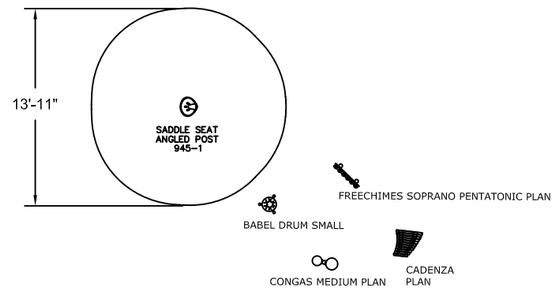

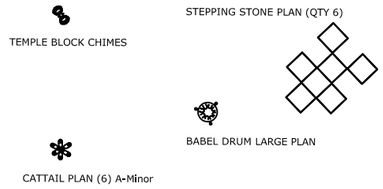

LOWER PLAY AREA

UPPER PLAY AREA

Miracle

DESIGNED FOR AGES
2-12 & 5-12

ADDITIONAL GROUND LEVEL ACCESSIBLE ITEMS NEEDED FOR ADA COMPLIANCE

TYPE:	QUANTITY:
0	0

- ✓ COMPLIES TO CPSC
- ✓ COMPLIES TO ASTM
- ✓ COMPLIES TO ADA

GROUND SPACE:	PROTECTIVE AREA:
N/A	NOTED

INTERNATIONAL PLAY EQUIPMENT MANUFACTURERS ASSOCIATION
PUBLIC PLAY EQUIPMENT
IPEMA CERTIFIED TO ASTM F1487

To verify product certification, visit www.ipema.org

THE PLAY COMPONENTS IDENTIFIED IN THIS PLAN ARE IPEMA CERTIFIED. THE USE AND LAYOUT OF THESE COMPONENTS CONFORM TO THE REQUIREMENTS OF ASTM F1487.

AN ENERGY ABSORBING PROTECTIVE SURFACE IS REQUIRED UNDER & AROUND ALL PLAY SYSTEMS.

JM

SHEET: 11"X17"

SCALE: 3/32"=1'-0"

DATE: 3/14/2025

MP250022-02-3

To promote safe and proper equipment use by children, Miracle recommends the installation of either a Miracle safety sign or other appropriate safety signage near each playsystem's main entry point(s) to inform parents and supervisors of the age appropriateness of the playsystem and general rules for safe play.

BEST BUDDIES PARK - REV C
HILTON HEAD, SC - 2-5 & 2-12 FREESTANDING DETAIL

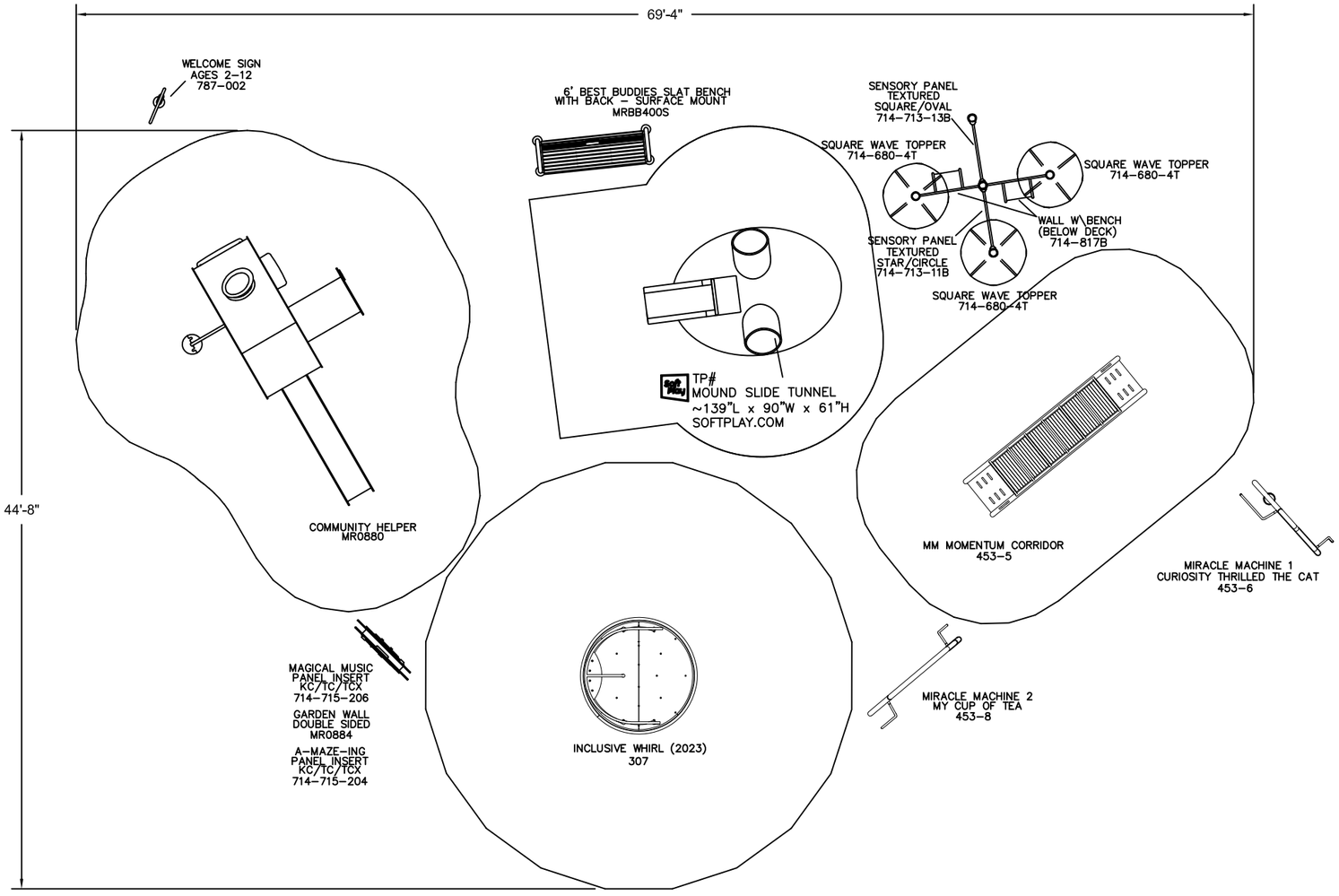

Miracle

DESIGNED FOR
AGES
2-5 & 2-12

ADDITIONAL GROUND LEVEL
ACCESSIBLE ITEMS NEEDED
FOR ADA COMPLIANCE

TYPE:	QUANTITY:
0	0

- ✓ COMPLIES TO CPSC
- ✓ COMPLIES TO ASTM
- ✓ COMPLIES TO ADA

GROUND SPACE:	PROTECTIVE AREA:
N/A	NOTED

INTERNATIONAL PLAY EQUIPMENT MANUFACTURERS ASSOCIATION
PUBLIC PLAY EQUIPMENT
IPEMA CERTIFIED TO ASTM F1487

To verify product certification,
visit www.ipema.org

THE PLAY COMPONENTS IDENTIFIED IN THIS PLAN ARE IPEMA CERTIFIED. THE USE AND LAYOUT OF THESE COMPONENTS CONFORM TO THE REQUIREMENTS OF ASTM F1487.

AN ENERGY ABSORBING PROTECTIVE SURFACE IS REQUIRED UNDER & AROUND ALL PLAY SYSTEMS.

JM

SHEET: 11"X17"

SCALE: 1/8"=1'-0"

DATE: 3/14/2025

MP250022-02-4

To promote safe and proper equipment use by children, Miracle recommends the installation of either a Miracle safety sign or other appropriate safety signage near each playsystem's main entry point(s) to inform parents and supervisors of the age appropriateness of the playsystem and general rules for safe play.

BEST BUDDIES PARK - REV C
HILTON HEAD, SC - SWING DETAIL

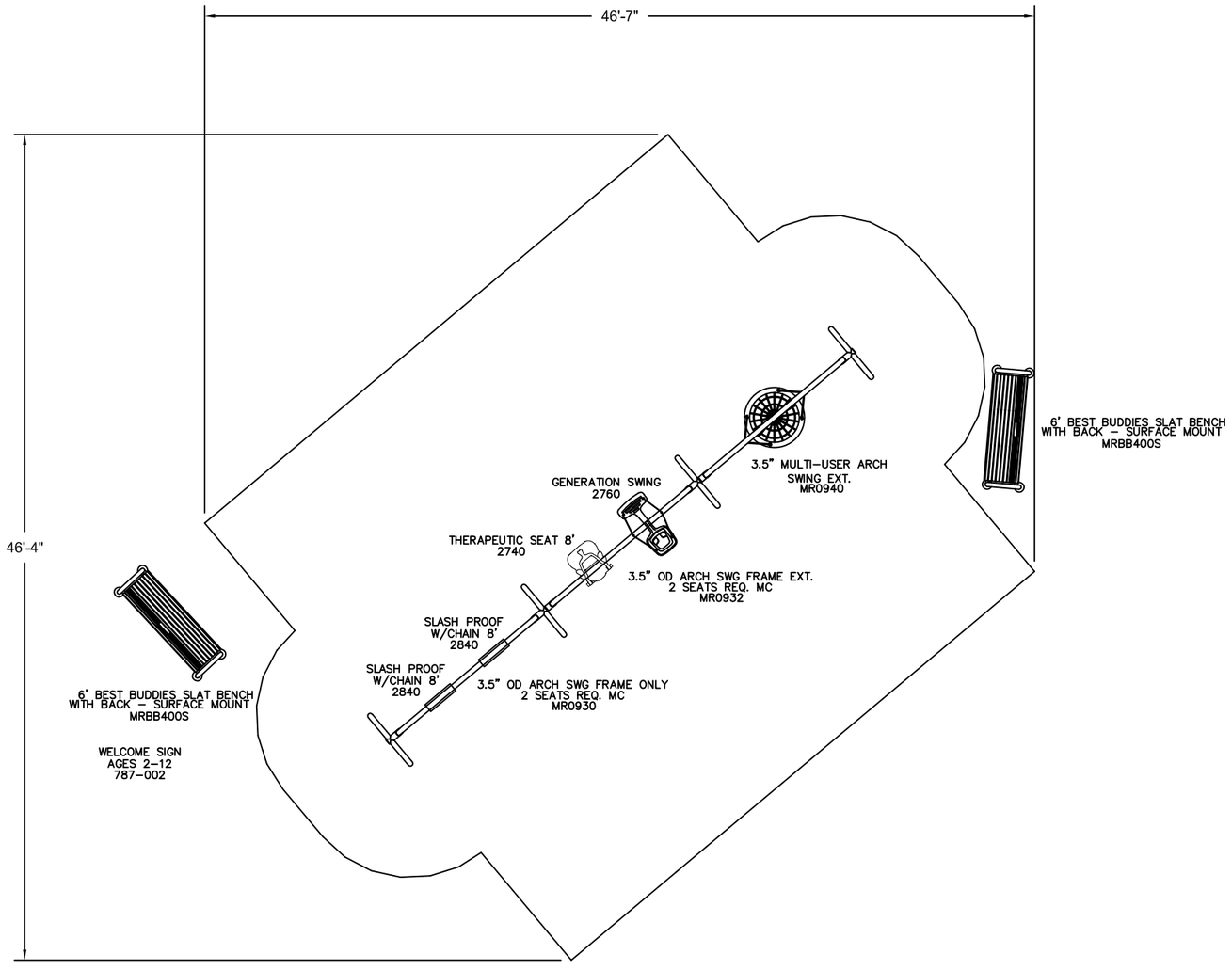

Miracle

DESIGNED FOR AGES
2-12

ADDITIONAL GROUND LEVEL ACCESSIBLE ITEMS NEEDED FOR ADA COMPLIANCE

TYPE:	QUANTITY:
0	0

- ✓ COMPLIES TO CPSC
- ✓ COMPLIES TO ASTM
- ✓ COMPLIES TO ADA

GROUND SPACE:	PROTECTIVE AREA:
N/A	NOTED

INTERNATIONAL PLAY EQUIPMENT PUBLIC PLAY EQUIPMENT IPEMA CERTIFIED TO ASTM F1487 MANUFACTURERS ASSOCIATION

To verify product certification, visit www.ipema.org

THE PLAY COMPONENTS IDENTIFIED IN THIS PLAN ARE IPEMA CERTIFIED. THE USE AND LAYOUT OF THESE COMPONENTS CONFORM TO THE REQUIREMENTS OF ASTM F1487.

AN ENERGY ABSORBING PROTECTIVE SURFACE IS REQUIRED UNDER & AROUND ALL PLAY SYSTEMS.

JM

SHEET: 11"X17"

SCALE: 1/8"=1'-0"

DATE: 3/14/2025

MP250022-02-5

To promote safe and proper equipment use by children, Miracle recommends the installation of either a Miracle safety sign or other appropriate safety signage near each playsystem's main entry point(s) to inform parents and supervisors of the age appropriateness of the playsystem and general rules for safe play.

BEST BUDDIES PARK - REV C
HILTON HEAD, SC - CUSTOM SHADE DETAIL-UPDATED

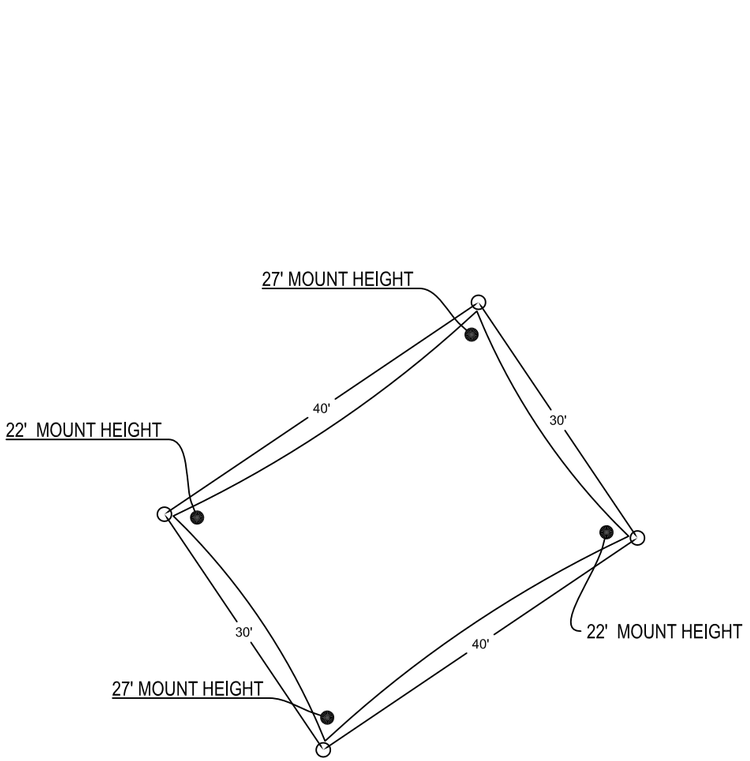

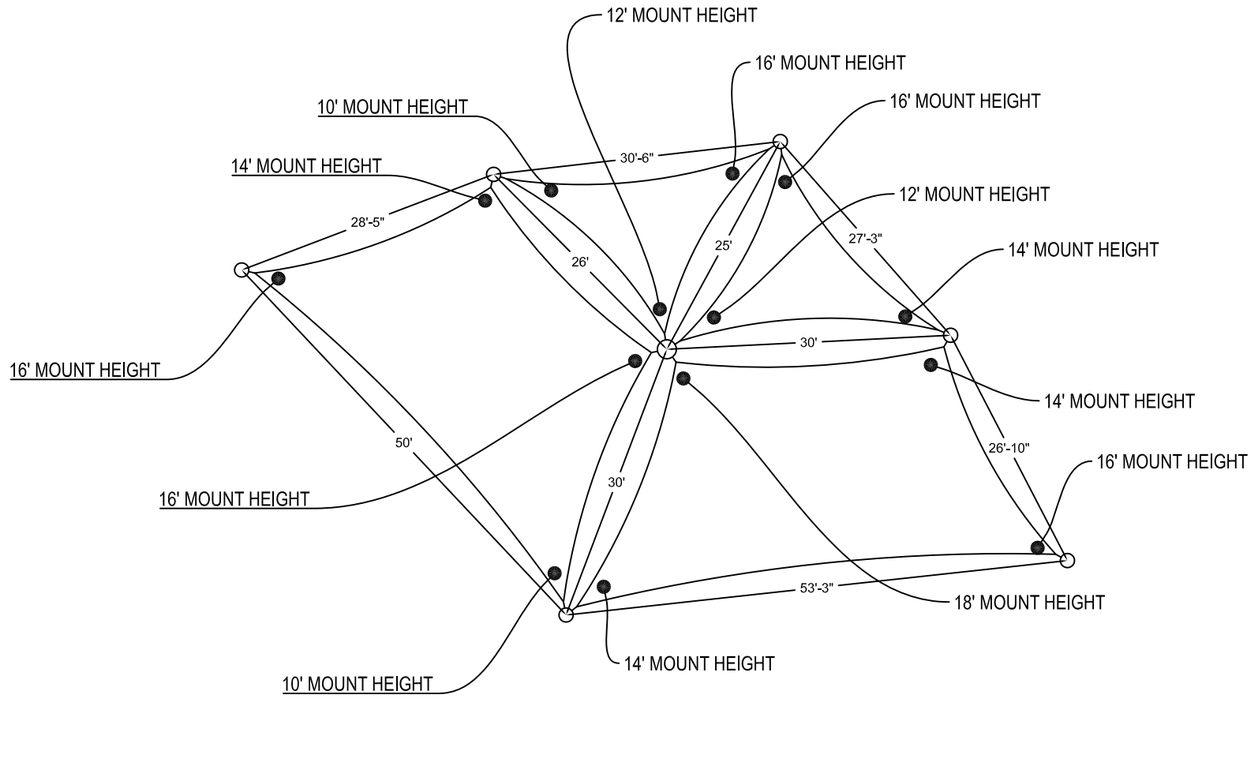

CUSTOM SAIL SHADE
"SHADES ARE CONCEPTUAL AWAITING APPROVAL.
SHADES MAY CHANGE IN DESIGN, STYLE, HEIGHT
OR OTHERWISE WITHOUT NOTICE."

Miracle

DESIGNED FOR AGES
N/A

ADDITIONAL GROUND LEVEL ACCESSIBLE ITEMS NEEDED FOR ADA COMPLIANCE

TYPE:	QUANTITY:
0	0

- ✓ COMPLIES TO CPSC
- ✓ COMPLIES TO ASTM
- ✓ COMPLIES TO ADA

GROUND SPACE:	PROTECTIVE AREA:
N/A	N/A

AN ENERGY ABSORBING PROTECTIVE SURFACE IS REQUIRED UNDER & AROUND ALL PLAY SYSTEMS.

JM

SHEET: 11"X17"

SCALE: 1/16"=1'-0"

DATE: 3/14/2025

MP250022-02-6

To promote safe and proper equipment use by children, Miracle recommends the installation of either a Miracle safety sign or other appropriate safety signage near each playsystem's main entry point(s) to inform parents and supervisors of the age appropriateness of the playsystem and general rules for safe play.

BEST BUDDIES PARK - REV C
HILTON HEAD, SC - SURFACING DETAIL



SURFACING NOTES:

- 6,325 SQ.FT. (BASE)
  33 TAN/BLACK
  VARYING CFH
- 4,050 SQ.FT. (PATH)
  33/33/33 LIGHT GREEN/PATINA GREEN/BLACK
  VARYING CFH
- 270 SQ.FT. (ARROWS)
  33/33/33 TAN/LIGHT GREY/TERRA COTTA RED
  VARYING CFH
- 70 SQ.FT. (HILL/MOUND)
  33/33/33 TAN/LIGHT GREY/TERRA COTTA RED
  3" CFH
- 550 SQ.FT. (CIRCLES)
  33 LIGHT GREEN/BLACK
  VARYING CFH
- 14 SQ.FT. (HOP SCOTCH)
  PURPLE
  VARYING CFH
- 14 SQ.FT. (HOP SCOTCH)
  ORANGE
  VARYING CFH
- 14 SQ.FT. (HOP SCOTCH)
  YELLOW
  VARYING CFH
- 6 SQ.FT. (HOP SCOTCH)
  TEAL
  VARYING CFH

Miracle

DESIGNED FOR AGES
N/A

ADDITIONAL GROUND LEVEL ACCESSIBLE ITEMS NEEDED FOR ADA COMPLIANCE

TYPE:	QUANTITY:
0	0

- ✓ COMPLIES TO CPSC
- ✓ COMPLIES TO ASTM
- ✓ COMPLIES TO ADA

GROUND SPACE:	PROTECTIVE AREA:
N/A	N/A

AN ENERGY ABSORBING PROTECTIVE SURFACE IS REQUIRED UNDER & AROUND ALL PLAY SYSTEMS.

JM

SHEET: 11"X17"

SCALE: 1/16"=1'-0"

DATE: 3/14/2025

MP250022-02-8

To promote safe and proper equipment use by children, Miracle recommends the installation of either a Miracle safety sign or other appropriate safety signage near each playsystem's main entry point(s) to inform parents and supervisors of the age appropriateness of the playsystem and general rules for safe play.

Babel Drum Large
Product Assessment

Percussion Play Ltd, Staple Ash Lane,

Froxfield, Petersfield, Hampshire, GU32 1DJ

Accredited Contractor
CHAS.co.uk

The Play Inspection Company Ltd, Unit 5 Glenmoore Business Park, Blackhill Road, Holton Heath, Poole, Dorset, BH16 6NL

t: 01202 590675 e: info@playinspections.co.uk w: www.playinspections.co.uk

The Play Inspection Company

Certificate of Conformity

Issue date: 6th June 2019

Percussion Play Ltd
Staple Ash Lane
Froxfield
Petersfield
Hampshire
GU32 1DJ

Products covered:

Babel Drum Large

The product detailed has been assessed as conforming to the main dimensional requirements of BS EN 1176:2017 based on technical drawings provided by the manufacturer

The desktop product assessments undertaken by the Play Inspection Company Ltd are not a formal certification as would be produced by an accredited test house. They are an indication of conformity based on drawings and dimensional information provided by the client.

We will check the major dimensional requirements as set out in the current standards for playground equipment (BS EN 1176– Parts 1-6, 10 & 11 as applicable to the product assessed. These dimensions include such things as barrier heights, platform heights, free height of fall, head and neck entrapment etc. but will exclude finer detail such as finger entrapment and toggle entrapments as these cannot be fully assessed based on a drawing alone. We do not undertake any structural assessment or testing, that element remains the responsibility of the designer; nor do we assess the suitability of materials used in the construction.

Reference Standards

BS EN 1176:2017 Part 1

Assessed by: Keith Dalton

K D a l t o n

The Play Inspection Company
Unit 5, Glenmore Business Park
Blackhill Road
Holton Heath
Poole
Dorset
BH16 6NL

Babel Drum Large Risk Assessment

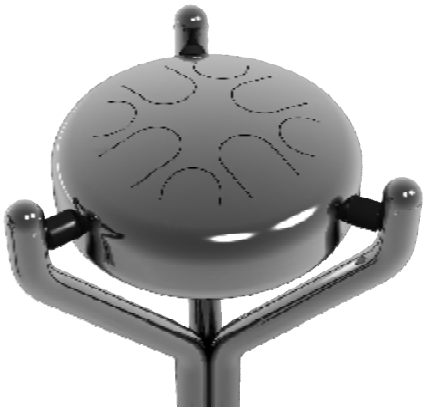

Assessment Date: 7th June 2019

Assessor: Keith Dalton

Manufacturer: Percussion Play Ltd

Risk Assessment: Very Low Risk

Activity: Use of musical playground equipment item

Number of Persons at Risk: Users, plus spectators

Hazards Involved with the Activity:

- Collision
- Entrapment

Safety Measures/Controls:

- All design requirements to comply fully with the requirements of BS EN 1176:2017 Part 1 incorporating, where required, criteria from all sections of the standard where it is deemed applicable to the safety of this item.
- The challenge (risk) associated with the use of the equipment is clearly foreseeable by the users.
- Age range: the intended age range for this item of equipment is for children of 3 years of age and above.
- A circulation Area of 1.50 metres is recommended to allow free movement for spectators around the item without moving into the space required for the safe use of the equipment.
- Correct siting of the equipment item within the playground environment to ensure free passage of playground users around the area.
- Detailed inspection and maintenance procedures to be provided for the equipment providing guidance on allowable tolerances during normal operation.

Risks remaining after the application of control measures:

Collision

With all control measures applied there will still be a risk remaining of users colliding with the equipment or with other users. It is considered that this remaining risk is of no significance, or any different from similar equipment item that incorporates this type of movement.

Given the provision of the safety measures detailed the remaining risk is considered to be 1 x 2 VERY LOW RISK

Additional Controls Required:

None

Risk Rating:

Likelihood		Severity	
1	Very Unlikely	1	Minor abrasion, light bruising
2	Not Very Likely	2	Small cuts, light sprains, more severe abrasion
3	Will happen at some time	3	Deep cuts, severe sprains etc. requiring medical intervention
4	Likely to happen	4	Injury requiring medical intervention and hospitalisation
5	Almost Certain to Happen	5	Permanent disability/death

Risk Score	Description	Action Required
1 – 5	Very Low Risk	Maintain control measures
6 – 10	Low Risk	Review control measures
11 – 15	Moderate Risk	Improve control measures
16 – 20	High Risk	Prevent access to item
21 – 25	Very High Risk	Remove from site

To establish the risk score multiply Likelihood by Severity

Controls Adequate:

Signed: K R Dalton

Date: 7th June 2019
The Play Inspection Company Ltd
Assessment Review Date: 7th June 2020

The Play Inspection Co.

Cadenza

PercussionPlay®
Outdoor Musical Instruments

Staple Ash Ln, Froxfield,
Petersfield GU32 1DJ

The Play Inspection Company Ltd, Unit 5 Glenmore Business Park, Blackhill Road, Holton Heath, Poole, Dorset, BH16 6NL

t: 01202 590675 e: info@playinspections.co.uk w: www.playinspections.co.uk

Cadenza

Assessment Date: 24th September 2021
Assessor: Keith Dalton
Manufacturer: Percussion Play Ltd
Risk Assessment: Very Low Risk

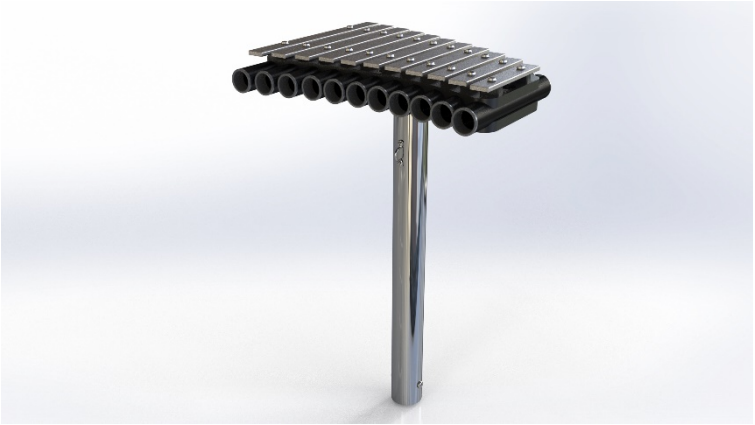

Activity:
Use of musical playground equipment item

Number of Persons at Risk:
Users, plus spectators

Hazards Involved with the Activity:

- Collision

Safety Measures/Controls:

- The design of this musical item falls outside the scope of EN 1176; it is not intended to be used as play equipment. We have however, used our knowledge of EN 1176 in formulating this assessment and consider it to be safe when used as intended.
- There are no falling height requirements for this type of equipment.
- The challenge (risk) associated with the use of the equipment is clearly foreseeable by the users.
- Age range: the intended age range for this item of equipment is for children of 3 years of age and above.
- All items should be placed outside any free or falling space of playground items in the area; a circulation area of 1.50 metres should be allowed around the footprint of each item to allow free movement for spectators around the item without moving into the space required for the safe use of the equipment.
- Correct siting of the equipment item within the playground environment to ensure free passage of playground users around the area.
- Detailed inspection and maintenance procedures to be provided for the equipment providing guidance on allowable tolerances during normal operation.

© The Play Inspection Company Ltd

Risks remaining after the application of control measures:

Collision

With all control measures applied there will still be a risk remaining of users colliding with the equipment or with other users. It is considered that this remaining risk is of no significance, or any different from similar equipment item that incorporates this type of movement.

Given the provision of the safety measures detailed the remaining risk is considered to be 1 x 2 VERY LOW RISK

Additional Controls Required: None

Risk Rating:

	Likelihood		Severity
1	Very Unlikely	1	Minor abrasion, light bruising
2	Not Very Likely	2	Small cuts, light sprains, more severe abrasion
3	Will happen at some time	3	Deep cuts, severe sprains etc. requiring medical intervention
4	Likely to happen	4	Injury requiring medical intervention and hospitalisation
5	Almost Certain to Happen	5	Permanent disability/death

Risk Score	Description	Action Required
1 – 5	Very Low Risk	Maintain control measures
6 – 10	Low Risk	Review control measures
11 – 15	Moderate Risk	Improve control measures
16 – 20	High Risk	Prevent access to item
21 – 25	Very High Risk	Remove from site

To establish the risk score multiply Likelihood by Severity

Controls Adequate:

Signed:





Date: 24th September 2021
The Play Inspection Company Ltd

Assessment Review Date: 24th September 2022

© The Play Inspection Company Ltd



PercussionPlay®
Outdoor Musical Instruments

Cattails Set of 6



Description

Whether you call them cattails, reeds, or bullrushes, these sleek chimes are instantly recognizable as the slender marsh plant with tall stems and dark brown velvety heads.

Perfect for playful interactions along nature trails, in parks, or in woodlands, citizens can stop and enjoy a moment of musical mind-fulness while exploring the great outdoors.

Materials and Features

316 mirror polished marine grade stainless steel legs.
Aluminum chimes.
Closed end caps and PU pointed end caps supplied.
2 x 1 part vandal resistant mallets.
Vandal resistant fixings.

Tuning and Sound Level Data

A-Minor Pentatonic (Set of 6) - A3, C4, D4, E4, G4, A4

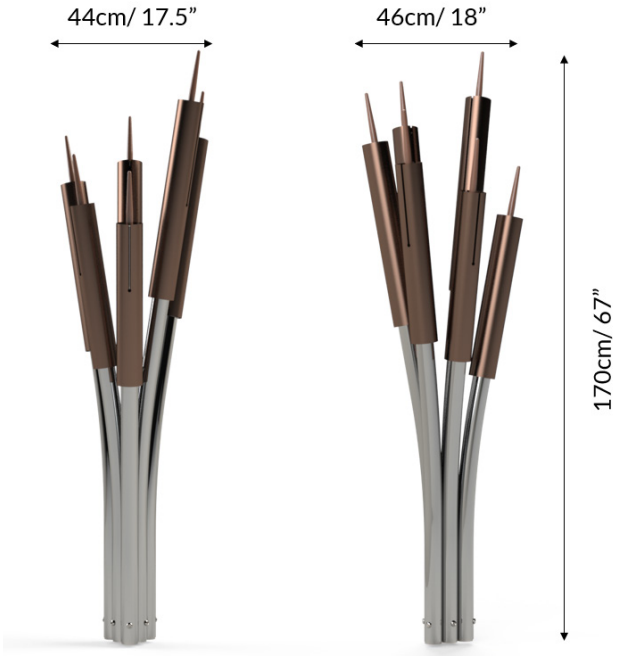

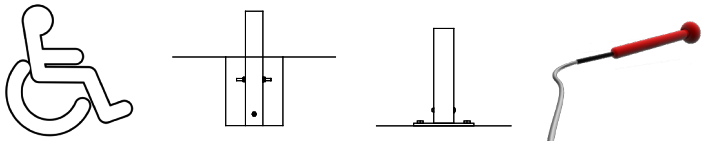

Packed Dimensions	Weight (lbs)	L (in)	H (in)	*W (in)*
Box 1-7 (Chimes)	14	78	4	7
Box 8 (GF Stanchion)	16	26	13	3

*Surface fixing instruments will include additional packages containing fixing plates.

Find more information and watch the video here.

Standard Compliance BS EN 1176
Warranty: Limited Twenty-Five (25), Limited Ten (10) Year & Limited Two (2) Year warranty
PPCATTS3MIGR

The Play Inspection Co.

Congas

PercussionPlay®
Outdoor Musical Instruments

Staple Ash Ln, Froxfield,
Petersfield GU32 1DJ

The Play Inspection Company Ltd, Unit 5 Glenmore Business Park, Blackhill Road, Holton Heath, Poole, Dorset, BH16 6NL

t: 01202 590675 e: info@playinspections.co.uk w: www.playinspections.co.uk

Congas

Assessment Date: 10th February 2023
Assessor: Keith Dalton
Manufacturer: Percussion Play Ltd
Risk Assessment: Very Low Risk



Activity:
Use of musical playground equipment item

Number of Persons at Risk:
Users, plus spectators

Hazards Involved with the Activity:

- Collision

Safety Measures/Controls:

- The design of this musical item falls outside the scope of EN 1176; it is not intended to be used as play equipment. We have however, used our knowledge of EN 1176 in formulating this assessment and consider it to be safe when used as intended.
- There are no falling height requirements for this type of equipment.
- The challenge (risk) associated with the use of the equipment is clearly foreseeable by the users.
- Age range: the intended age range for this item of equipment is for children of 3 years of age and above.
- All items should be placed outside any free or falling space of playground items in the area; a circulation area of 1.50 metres should be allowed around the footprint of each item to allow free movement for spectators around the item without moving into the space required for the safe use of the equipment.
- Correct siting of the equipment item within the environment to ensure free passage of users around the area.
- Detailed inspection and maintenance procedures to be provided for the equipment providing guidance on allowable tolerances during normal operation.

© The Play Inspection Company Ltd

Risks remaining after the application of control measures:

Collision

With all control measures applied there will still be a risk remaining of users colliding with the equipment or with other users. It is considered that this remaining risk is of no significance, or any different from similar equipment item that incorporates this type of movement.

Given the provision of the safety measures detailed the remaining risk is considered to be 1 x 2 VERY LOW RISK

Additional Controls Required: None

Risk Rating:

	Likelihood		Severity
1	Very Unlikely	1	Minor abrasion, light bruising
2	Not Very Likely	2	Small cuts, light sprains, more severe abrasion
3	Will happen at some time	3	Deep cuts, severe sprains etc. requiring medical intervention
4	Likely to happen	4	Injury requiring medical intervention and hospitalisation
5	Almost Certain to Happen	5	Permanent disability/death

Risk Score	Description	Action Required
1 – 5	Very Low Risk	Maintain control measures
6 – 10	Low Risk	Review control measures
11 – 15	Moderate Risk	Improve control measures
16 – 20	High Risk	Prevent access to item
21 – 25	Very High Risk	Remove from site

To establish the risk score multiply Likelihood by Severity

Controls Adequate:

Signed:





Date: 10th February 2023
The Play Inspection Company Ltd

Assessment Review Date: 10th February 2024

© The Play Inspection Company Ltd



Poured-In-Place (PIP) Surfacing

Color Chart

Standard Color Blends



50% Tan 50% Black



50% Terra Cotta 50% Black

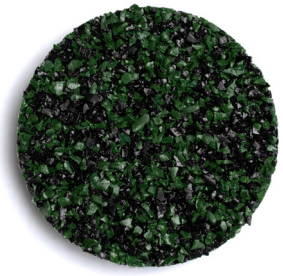

50% Green 50% Black



50% Blue 50% Black

Available Colors



Terra Cotta



Orange



Yellow



Gold



Brown



Tan



Light Green

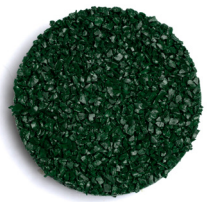

Green



Teal



Purple

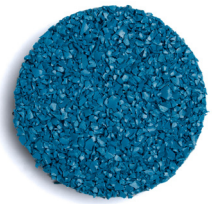

Light Blue



Blue

No Fault® Surfaces
6750 Exchequer Drive
Baton Rouge, LA 70809
1.800.232.7766
nofault.com

DISCLAIMER:
The colors as shown will not be an exact match to the product in the field.

BEST BUDDIES PARK - REV C
HILTON HEAD, SC - OVERALL PLAYGROUND LAYOUT

2-5 PLAY AREA

ELEVATED PLAY ACTIVITIES - TOTAL	2		
ELEVATED PLAY ACTIVITIES ACCESSIBLE BY TRANSFER	2	REQ'D	1
ELEVATED PLAY ACTIVITIES ACCESSIBLE BY RAMP	0	REQ'D	0
GROUND LEVEL ACTIVITY TYPE	4	REQ'D	1
GROUND LEVEL ACTIVITY QUANTITY	11	REQ'D	1

REPRESENTS PLAY AREA ONLY

AREA: 11,700 SQ.FT.
PERIMETER: 258'
The information provided is for estimation purposes only.

Play Area Capacity: 390-410

2-12 PLAY AREA

ELEVATED PLAY ACTIVITIES - TOTAL	0		
ELEVATED PLAY ACTIVITIES ACCESSIBLE BY TRANSFER	0	REQ'D	0
ELEVATED PLAY ACTIVITIES ACCESSIBLE BY RAMP	0	REQ'D	0
GROUND LEVEL ACTIVITY TYPE	6	REQ'D	0
GROUND LEVEL ACTIVITY QUANTITY	26	REQ'D	0

5-12 PLAY AREA

ELEVATED PLAY ACTIVITIES - TOTAL	27		
ELEVATED PLAY ACTIVITIES ACCESSIBLE BY TRANSFER	21	REQ'D	0
ELEVATED PLAY ACTIVITIES ACCESSIBLE BY RAMP	21	REQ'D	13
GROUND LEVEL ACTIVITY TYPE	8	REQ'D	0
GROUND LEVEL ACTIVITY QUANTITY	15	REQ'D	0

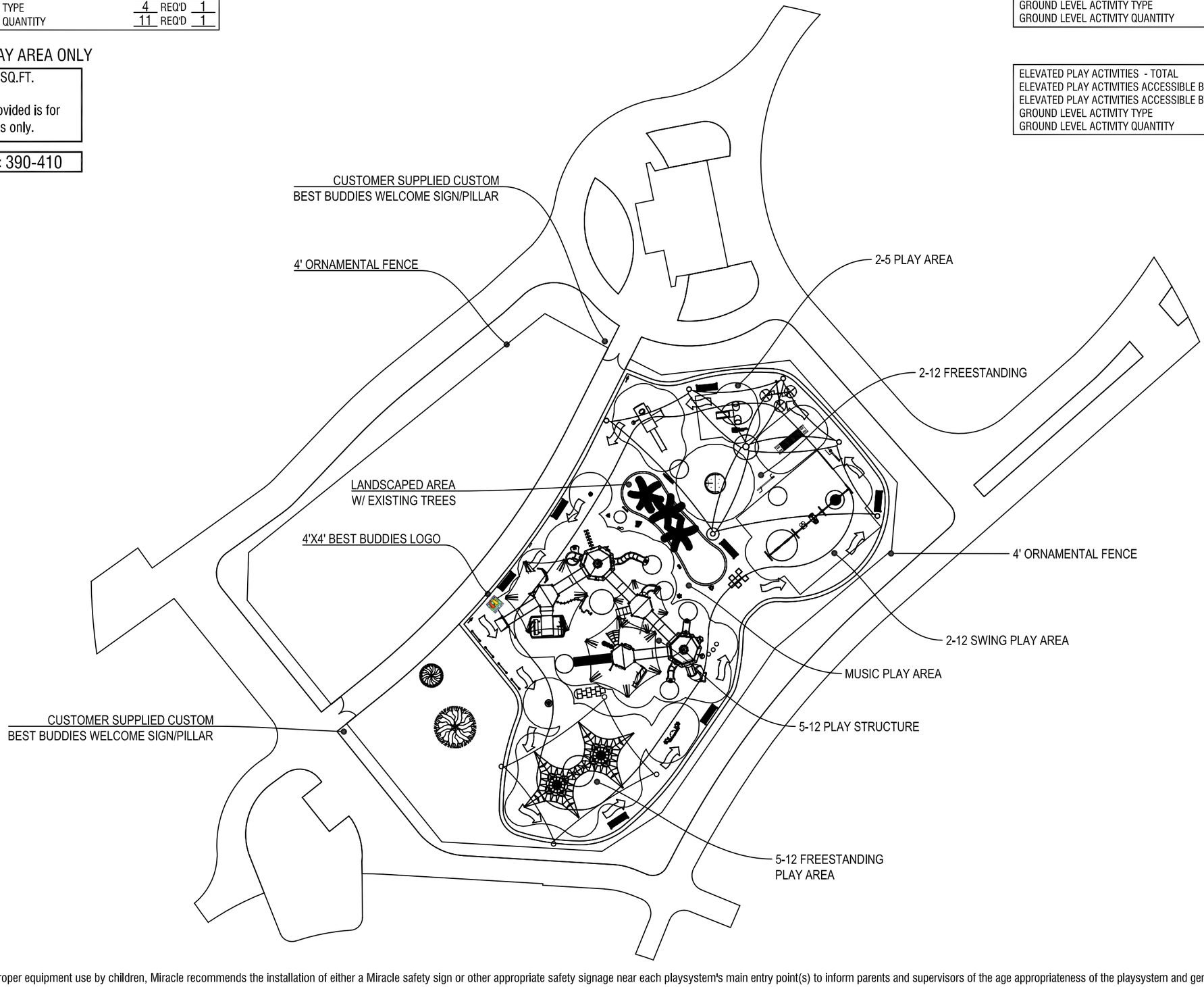

Miracle

DESIGNED FOR AGES
2-5, 2-12 & 5-12

ADDITIONAL GROUND LEVEL ACCESSIBLE ITEMS NEEDED FOR ADA COMPLIANCE

TYPE:	QUANTITY:
0	0

- ✓ COMPLIES TO CPSC
- ✓ COMPLIES TO ASTM
- ✓ COMPLIES TO ADA

GROUND SPACE:	PROTECTIVE AREA:
N/A	NOTED

AN ENERGY ABSORBING PROTECTIVE SURFACE IS REQUIRED UNDER & AROUND ALL PLAY SYSTEMS.

JM

SHEET: 11"X17"

SCALE: N.T.S.

DATE: 3/14/2025

MP250022-02-1

To promote safe and proper equipment use by children, Miracle recommends the installation of either a Miracle safety sign or other appropriate safety signage near each playsystem's main entry point(s) to inform parents and supervisors of the age appropriateness of the playsystem and general rules for safe play.

BEST BUDDIES PARK - REV C
HILTON HEAD, SC - 5-12 PLAY STRUCTURE DETAIL

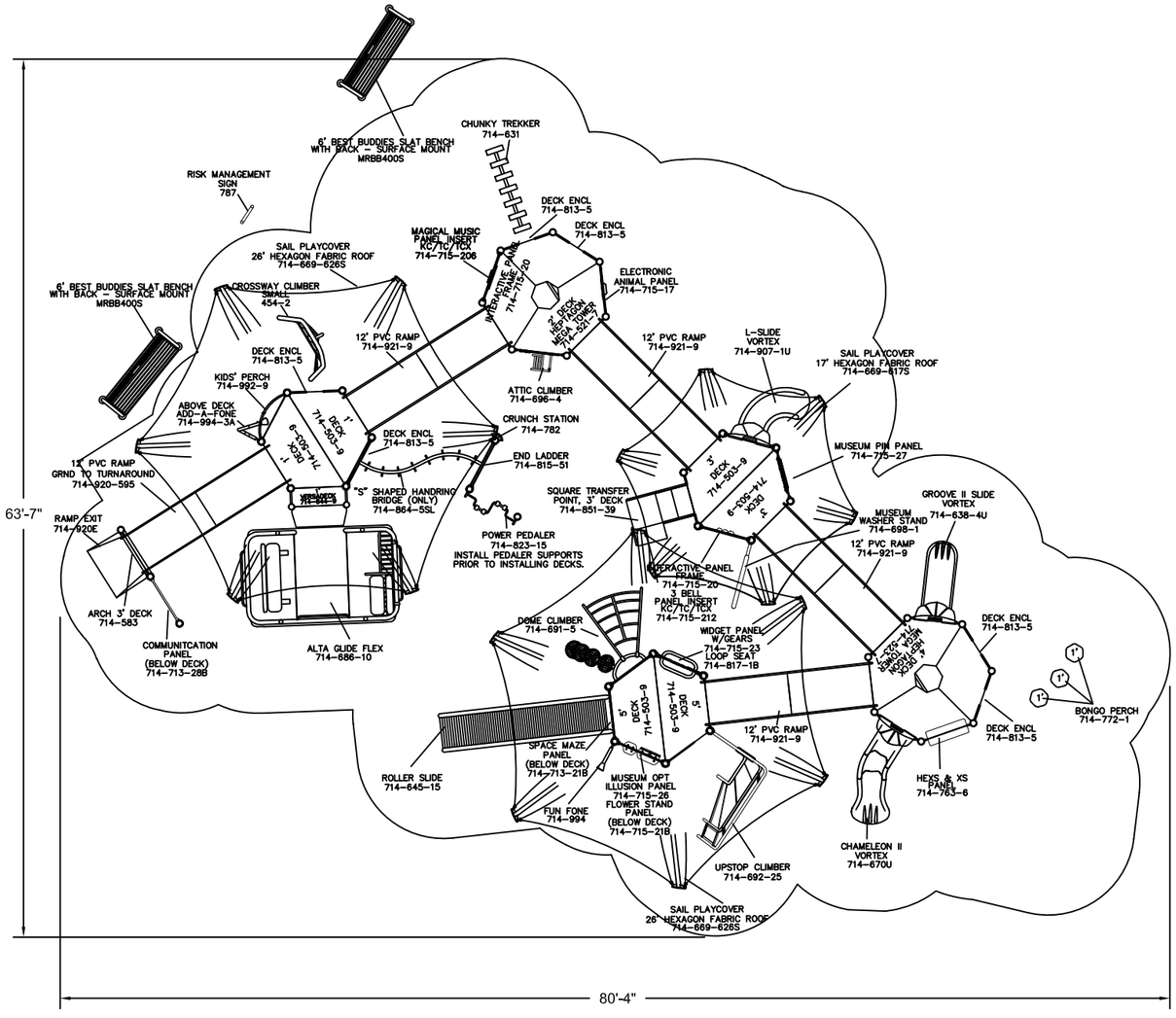

MEGA TOWER
STRUCTURE LEVEL 1

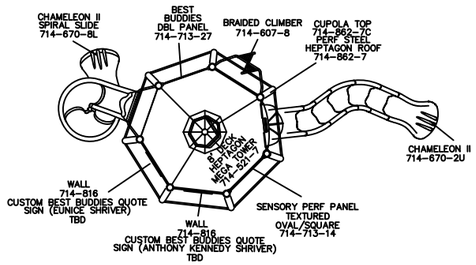

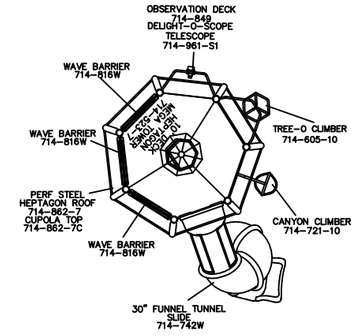

MEGA TOWER
STRUCTURE LEVEL 2

Miracle

DESIGNED FOR AGES
5-12

ADDITIONAL GROUND LEVEL ACCESSIBLE ITEMS NEEDED FOR ADA COMPLIANCE

TYPE:	QUANTITY:
0	0

- ✓ COMPLIES TO CPSC
- ✓ COMPLIES TO ASTM
- ✓ COMPLIES TO ADA

GROUND SPACE:	PROTECTIVE AREA:
N/A	NOTED

INTERNATIONAL PLAY EQUIPMENT MANUFACTURERS ASSOCIATION
PUBLIC PLAY EQUIPMENT
IPEMA CERTIFIED TO ASTM F1487

To verify product certification, visit www.ipema.org

THE PLAY COMPONENTS IDENTIFIED IN THIS PLAN ARE IPEMA CERTIFIED. THE USE AND LAYOUT OF THESE COMPONENTS CONFORM TO THE REQUIREMENTS OF ASTM F1487.

AN ENERGY ABSORBING PROTECTIVE SURFACE IS REQUIRED UNDER & AROUND ALL PLAY SYSTEMS.

JM

SHEET: 11"X17"

SCALE: 3/32"=1'-0"

DATE: 3/14/2025

MP250022-02-2

To promote safe and proper equipment use by children, Miracle recommends the installation of either a Miracle safety sign or other appropriate safety signage near each playsystem's main entry point(s) to inform parents and supervisors of the age appropriateness of the playsystem and general rules for safe play.

BEST BUDDIES PARK - REV C
HILTON HEAD, SC - 5-12 FREESTANDING & 2-12 MUSIC PLAY DETAIL

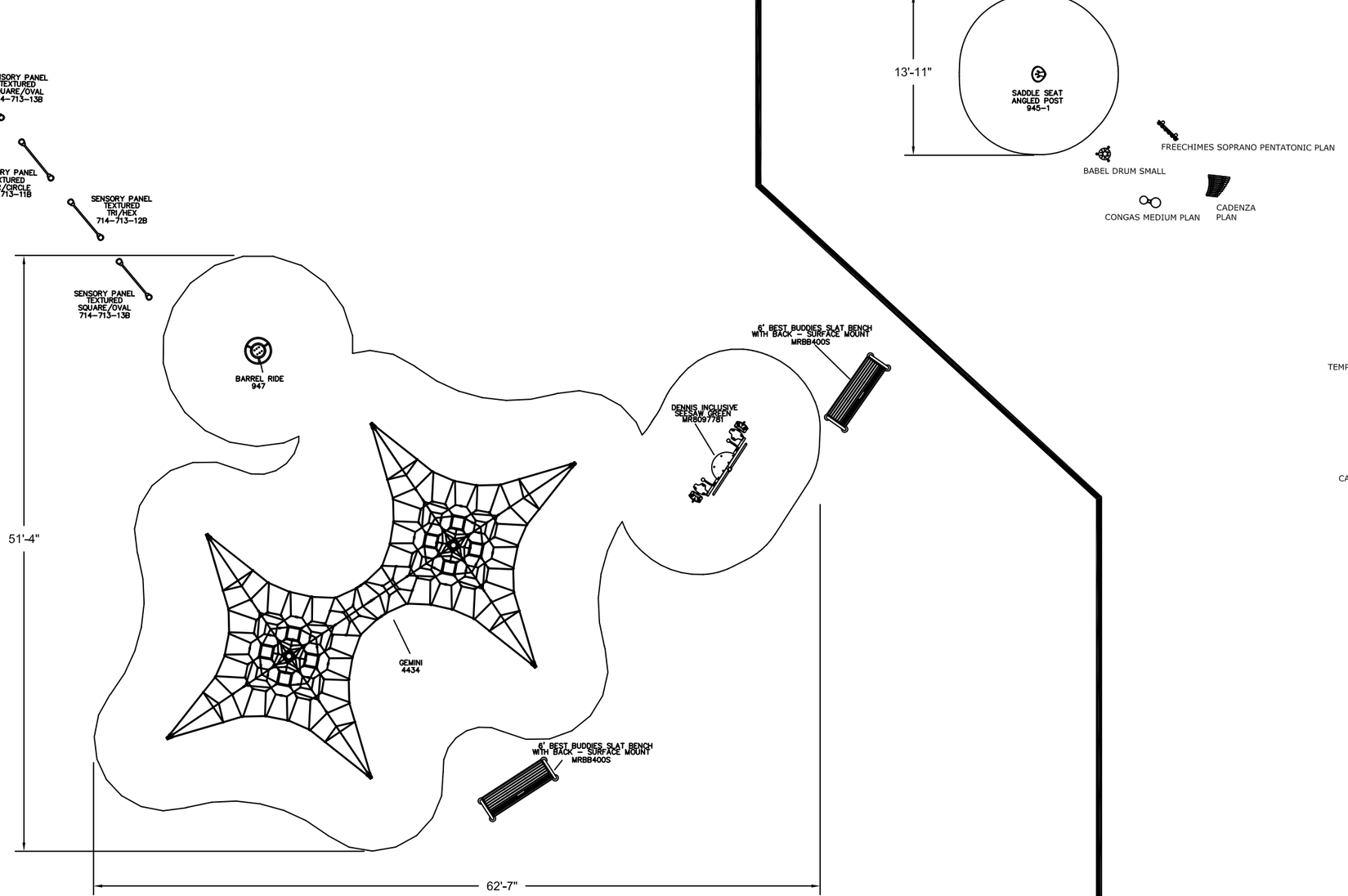

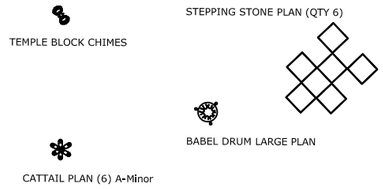

LOWER PLAY AREA

UPPER PLAY AREA

Miracle

DESIGNED FOR AGES
2-12 & 5-12

ADDITIONAL GROUND LEVEL ACCESSIBLE ITEMS NEEDED FOR ADA COMPLIANCE

TYPE:	QUANTITY:
0	0

- ✓ COMPLIES TO CPSC
- ✓ COMPLIES TO ASTM
- ✓ COMPLIES TO ADA

GROUND SPACE:	PROTECTIVE AREA:
N/A	NOTED

INTERNATIONAL PLAY EQUIPMENT MANUFACTURERS ASSOCIATION
PUBLIC PLAY EQUIPMENT
IPEMA CERTIFIED TO ASTM F1487

To verify product certification, visit www.ipema.org

THE PLAY COMPONENTS IDENTIFIED IN THIS PLAN ARE IPEMA CERTIFIED. THE USE AND LAYOUT OF THESE COMPONENTS CONFORM TO THE REQUIREMENTS OF ASTM F1487.

AN ENERGY ABSORBING PROTECTIVE SURFACE IS REQUIRED UNDER & AROUND ALL PLAY SYSTEMS.

JM

SHEET: 11"X17"

SCALE: 3/32"=1'-0"

DATE: 3/14/2025

MP250022-02-3

To promote safe and proper equipment use by children, Miracle recommends the installation of either a Miracle safety sign or other appropriate safety signage near each playsystem's main entry point(s) to inform parents and supervisors of the age appropriateness of the playsystem and general rules for safe play.

BEST BUDDIES PARK - REV C
HILTON HEAD, SC - 2-5 & 2-12 FREESTANDING DETAIL

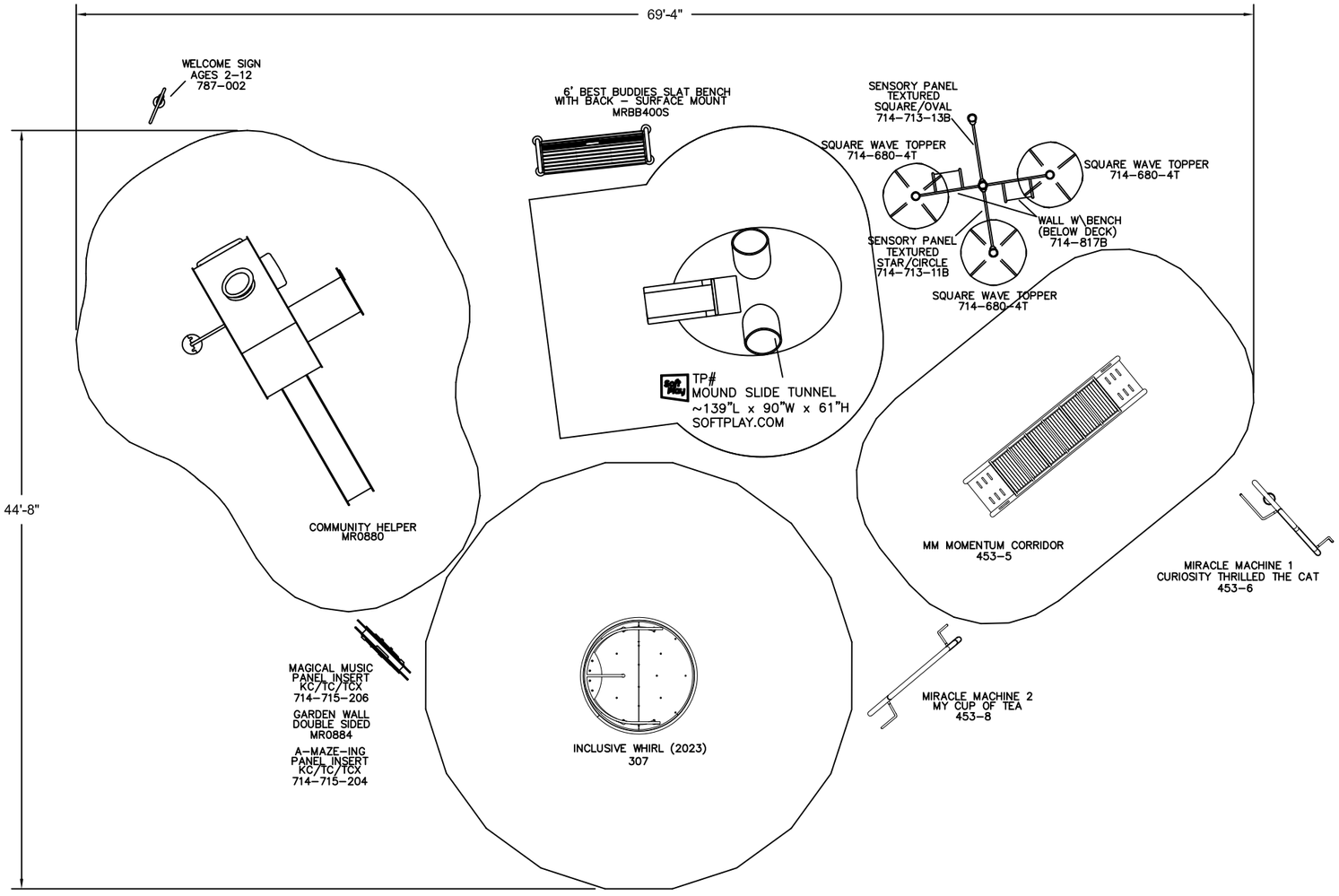

Miracle

DESIGNED FOR
AGES
2-5 & 2-12

ADDITIONAL GROUND LEVEL
ACCESSIBLE ITEMS NEEDED
FOR ADA COMPLIANCE

TYPE:	QUANTITY:
0	0

- ✓ COMPLIES TO CPSC
- ✓ COMPLIES TO ASTM
- ✓ COMPLIES TO ADA

GROUND SPACE:	PROTECTIVE AREA:
N/A	NOTED

INTERNATIONAL PLAY EQUIPMENT MANUFACTURERS ASSOCIATION
PUBLIC PLAY EQUIPMENT
IPEMA CERTIFIED TO ASTM F1487

To verify product certification,
visit www.ipema.org

THE PLAY COMPONENTS IDENTIFIED IN THIS PLAN ARE IPEMA CERTIFIED. THE USE AND LAYOUT OF THESE COMPONENTS CONFORM TO THE REQUIREMENTS OF ASTM F1487.

AN ENERGY ABSORBING PROTECTIVE SURFACE IS REQUIRED UNDER & AROUND ALL PLAY SYSTEMS.

JM

SHEET: 11"X17"

SCALE: 1/8"=1'-0"

DATE: 3/14/2025

MP250022-02-4

To promote safe and proper equipment use by children, Miracle recommends the installation of either a Miracle safety sign or other appropriate safety signage near each playsystem's main entry point(s) to inform parents and supervisors of the age appropriateness of the playsystem and general rules for safe play.

BEST BUDDIES PARK - REV C
HILTON HEAD, SC - SWING DETAIL

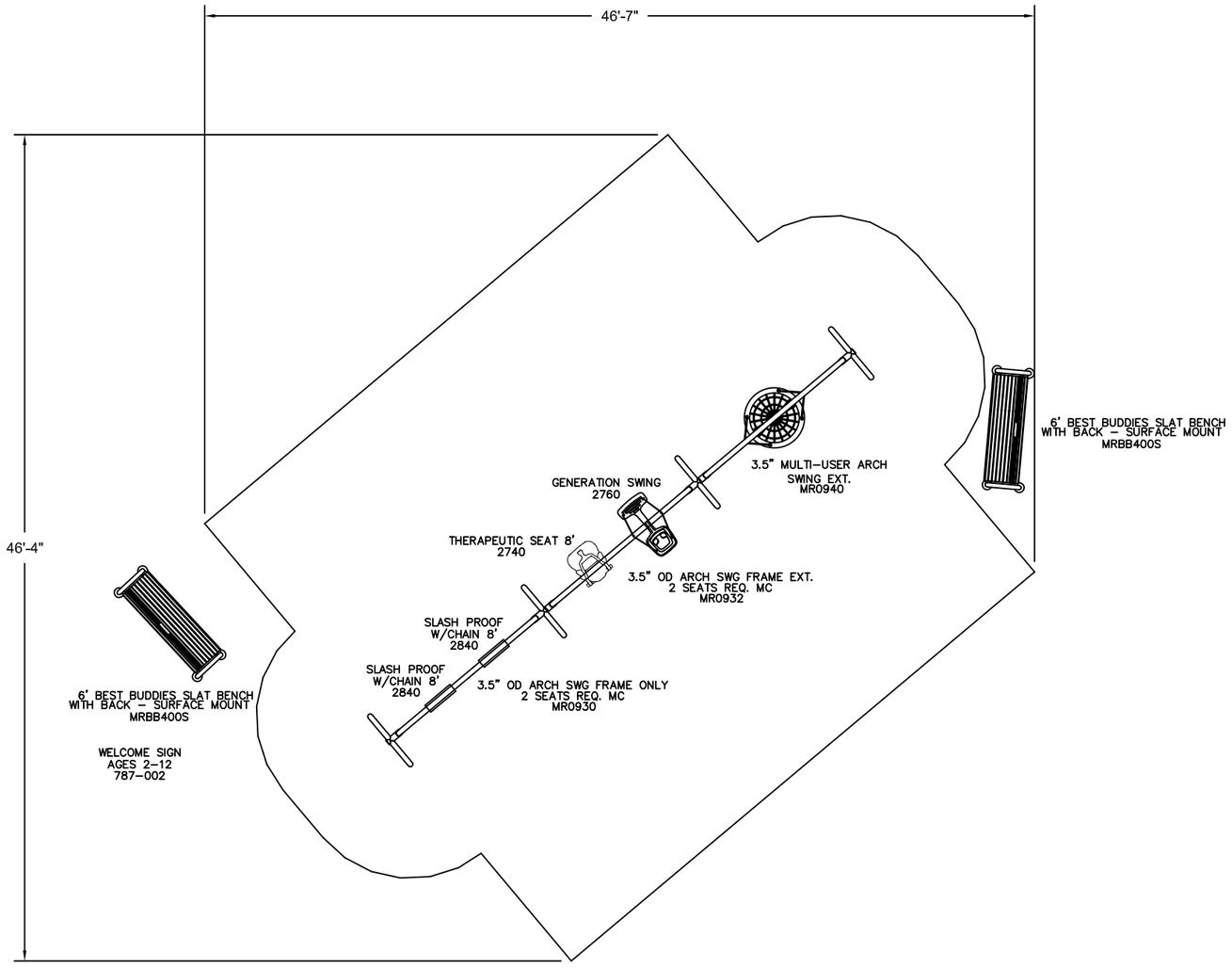

Miracle

DESIGNED FOR AGES
2-12

ADDITIONAL GROUND LEVEL ACCESSIBLE ITEMS NEEDED FOR ADA COMPLIANCE

TYPE:	QUANTITY:
0	0

- ✓ COMPLIES TO CPSC
- ✓ COMPLIES TO ASTM
- ✓ COMPLIES TO ADA

GROUND SPACE:	PROTECTIVE AREA:
N/A	NOTED

INTERNATIONAL PLAY EQUIPMENT PUBLIC PLAY EQUIPMENT IPEMA CERTIFIED TO ASTM F1487 MANUFACTURERS ASSOCIATION

To verify product certification, visit www.ipema.org

THE PLAY COMPONENTS IDENTIFIED IN THIS PLAN ARE IPEMA CERTIFIED. THE USE AND LAYOUT OF THESE COMPONENTS CONFORM TO THE REQUIREMENTS OF ASTM F1487.

AN ENERGY ABSORBING PROTECTIVE SURFACE IS REQUIRED UNDER & AROUND ALL PLAY SYSTEMS.

JM

SHEET: 11"X17"

SCALE: 1/8"=1'-0"

DATE: 3/14/2025

MP250022-02-5

To promote safe and proper equipment use by children, Miracle recommends the installation of either a Miracle safety sign or other appropriate safety signage near each playsystem's main entry point(s) to inform parents and supervisors of the age appropriateness of the playsystem and general rules for safe play.

BEST BUDDIES PARK - REV C
HILTON HEAD, SC - CUSTOM SHADE DETAIL-UPDATED

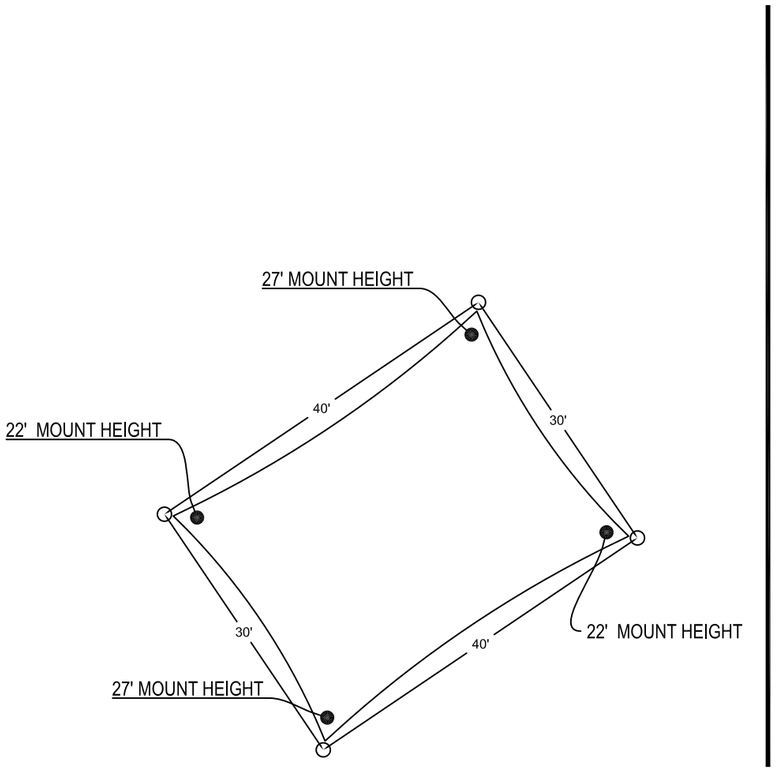

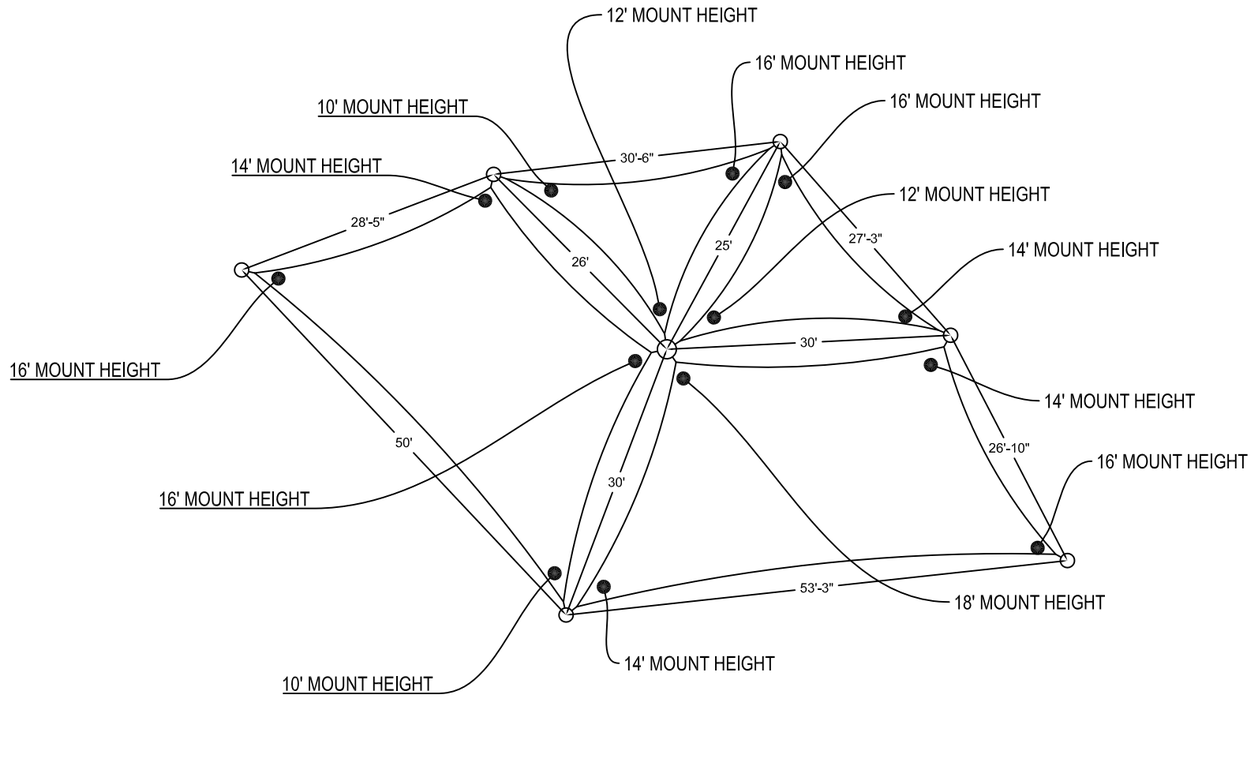

Miracle

DESIGNED FOR AGES
N/A

ADDITIONAL GROUND LEVEL ACCESSIBLE ITEMS NEEDED FOR ADA COMPLIANCE

TYPE:	QUANTITY:
0	0

✓	COMPLIES TO CPSC
✓	COMPLIES TO ASTM
✓	COMPLIES TO ADA

GROUND SPACE:	PROTECTIVE AREA:
N/A	N/A

AN ENERGY ABSORBING PROTECTIVE SURFACE IS REQUIRED UNDER & AROUND ALL PLAY SYSTEMS.

JM

SHEET: 11"X17"

SCALE: 1/16"=1'-0"

DATE: 3/14/2025

MP250022-02-6

To promote safe and proper equipment use by children, Miracle recommends the installation of either a Miracle safety sign or other appropriate safety signage near each playsystem's main entry point(s) to inform parents and supervisors of the age appropriateness of the playsystem and general rules for safe play.

BEST BUDDIES PARK - REV C
HILTON HEAD, SC - SURFACING DETAIL



SURFACING NOTES:

- 6,325 SQ.FT. (BASE)
  33 TAN/BLACK
  VARYING CFH
- 4,050 SQ.FT. (PATH)
  33/33/33 LIGHT GREEN/PATINA GREEN/BLACK
  VARYING CFH
- 270 SQ.FT. (ARROWS)
  33/33/33 TAN/LIGHT GREY/TERRA COTTA RED
  VARYING CFH
- 70 SQ.FT. (HILL/MOUND)
  33/33/33 TAN/LIGHT GREY/TERRA COTTA RED
  3" CFH
- 550 SQ.FT. (CIRCLES)
  33 LIGHT GREEN/BLACK
  VARYING CFH
- 14 SQ.FT. (HOP SCOTCH)
  PURPLE
  VARYING CFH
- 14 SQ.FT. (HOP SCOTCH)
  ORANGE
  VARYING CFH
- 14 SQ.FT. (HOP SCOTCH)
  YELLOW
  VARYING CFH
- 6 SQ.FT. (HOP SCOTCH)
  TEAL
  VARYING CFH

Miracle

DESIGNED FOR
AGES
N/A

ADDITIONAL GROUND LEVEL ACCESSIBLE ITEMS NEEDED FOR ADA COMPLIANCE

TYPE:	QUANTITY:
0	0

✓	COMPLIES TO CPSC
✓	COMPLIES TO ASTM
✓	COMPLIES TO ADA

GROUND SPACE:	PROTECTIVE AREA:
N/A	N/A

AN ENERGY ABSORBING PROTECTIVE SURFACE IS REQUIRED UNDER & AROUND ALL PLAY SYSTEMS.

JM

SHEET: 11"X17"

SCALE: 1/16"=1'-0"

DATE: 3/14/2025

MP250022-02-8

To promote safe and proper equipment use by children, Miracle recommends the installation of either a Miracle safety sign or other appropriate safety signage near each playsystem's main entry point(s) to inform parents and supervisors of the age appropriateness of the playsystem and general rules for safe play.

NO FAULT SAFETY SURFACE

RECESSED BASE ADJACENT TO CONCRETE EDGE

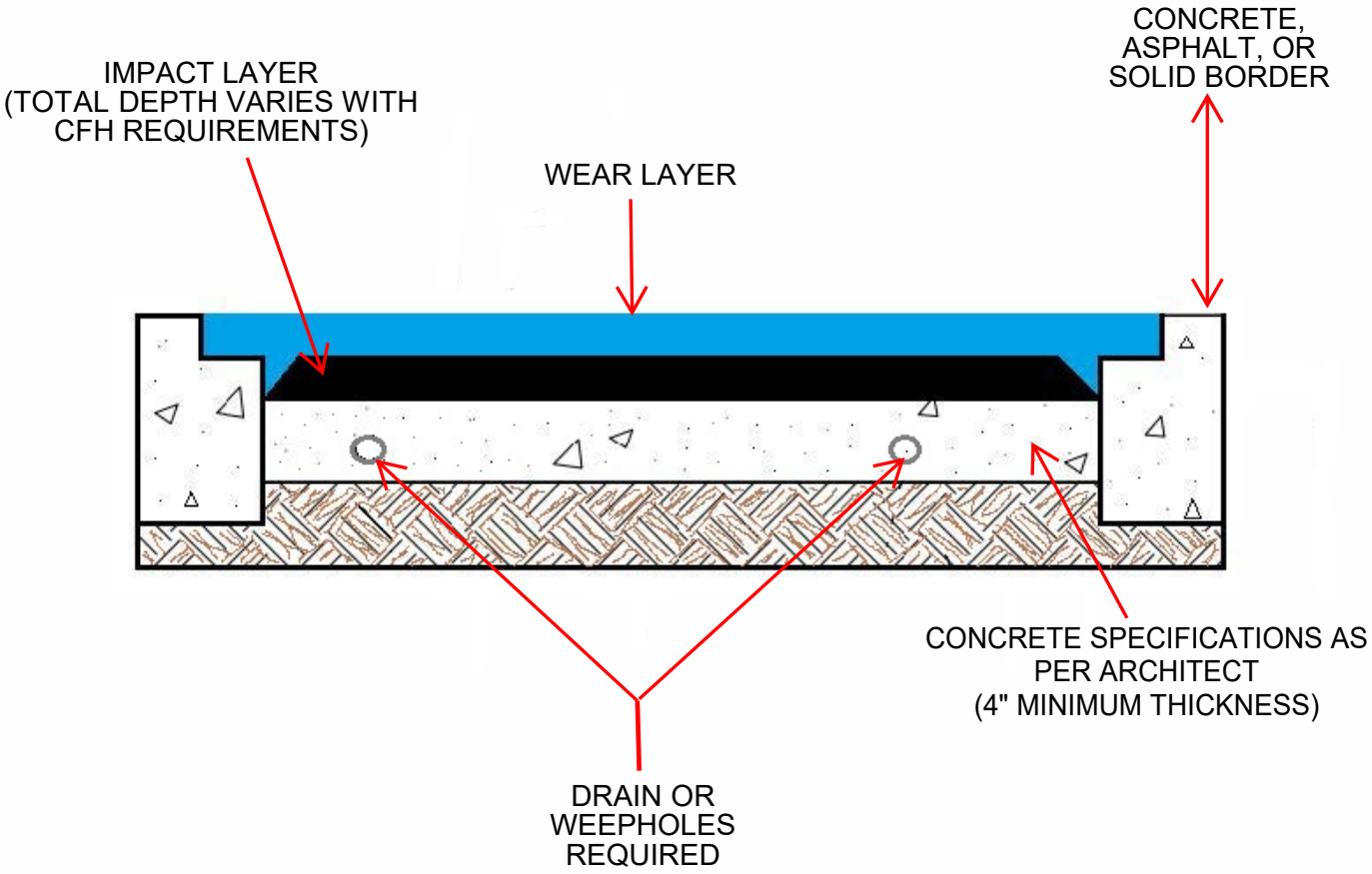

****DRAWING NOT TO SCALE****

DISCLAIMER:

- NFLLC reserves the right to modify these edge details at anytime. It is the responsibility of the owner/architect/general contractor to verify the validity of these details.
- NFLLC will not provide warranty coverage for the PIP failure due to damage caused by lawn maintenance and/or raveled edge due to erosion.

surfaces

NO FAULT LLC
6750 Exchequer Dr.
Baton Rouge, LA 70809
www.nofault.com

The Play Inspection Co.

Babel Drum Small

PercussionPlay®
Outdoor Musical Instruments

Staple Ash Ln, Froxfield,
Petersfield GU32 1DJ

SafeContractor APPROVED

rpii Register of Play Inspectors International

API Member

ASSOCIATION OF INDOOR PLAY CERTIFIED MEMBER

The Play Inspection Company Ltd, Unit 5 Glenmore Business Park, Blackhill Road, Holton Heath, Poole, Dorset, BH16 6NL

t: 01202 590675 e: info@playinspections.co.uk w: www.playinspections.co.uk

Babel Drum Small

Assessment Date: 10th February 2023
Assessor: Keith Dalton
Manufacturer: Percussion Play Ltd
Risk Assessment: Very Low Risk

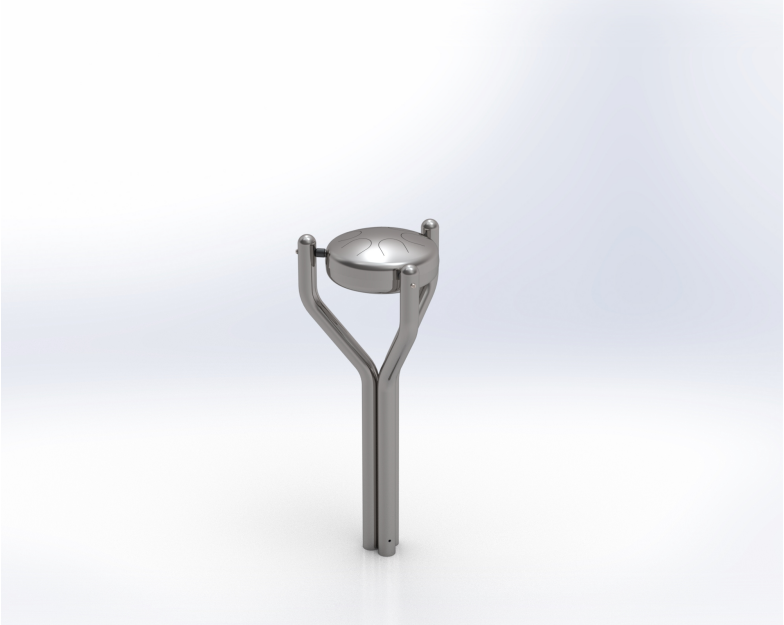

Activity:
Use of musical playground equipment item

Number of Persons at Risk:
Users, plus spectators

Hazards Involved with the Activity:

- Collision

Safety Measures/Controls:

- The design of this musical item falls outside the scope of EN 1176; it is not intended to be used as play equipment. We have however, used our knowledge of EN 1176 in formulating this assessment and consider it to be safe when used as intended.
- There are no falling height requirements for this type of equipment.
- The challenge (risk) associated with the use of the equipment is clearly foreseeable by the users.
- Age range: the intended age range for this item of equipment is for children of 3 years of age and above.
- All items should be placed outside any free or falling space of playground items in the area; a circulation area of 1.50 metres should be allowed around the footprint of each item to allow free movement for spectators around the item without moving into the space required for the safe use of the equipment.
- Correct siting of the equipment item within the environment to ensure free passage of users around the area.
- Detailed inspection and maintenance procedures to be provided for the equipment providing guidance on allowable tolerances during normal operation.

© The Play Inspection Company Ltd

Risks remaining after the application of control measures:

Collision

With all control measures applied there will still be a risk remaining of users colliding with the equipment or with other users. It is considered that this remaining risk is of no significance, or any different from similar equipment item that incorporates this type of movement.

Given the provision of the safety measures detailed the remaining risk is considered to be 1 x 2 VERY LOW RISK

Additional Controls Required: None

Risk Rating:

	Likelihood		Severity
1	Very Unlikely	1	Minor abrasion, light bruising
2	Not Very Likely	2	Small cuts, light sprains, more severe abrasion
3	Will happen at some time	3	Deep cuts, severe sprains etc. requiring medical intervention
4	Likely to happen	4	Injury requiring medical intervention and hospitalisation
5	Almost Certain to Happen	5	Permanent disability/death

Risk Score	Description	Action Required
1 – 5	Very Low Risk	Maintain control measures
6 – 10	Low Risk	Review control measures
11 – 15	Moderate Risk	Improve control measures
16 – 20	High Risk	Prevent access to item
21 – 25	Very High Risk	Remove from site

To establish the risk score multiply Likelihood by Severity

Controls Adequate:

Signed:





Date: 10th February 2023
The Play Inspection Company Ltd

Assessment Review Date: 10th February 2024

© The Play Inspection Company Ltd



Freechimes(Soprano Pentatonic)

PercussionPlay®
Outdoor Musical Instruments

Staple Ash Ln, Froxfield,
Petersfield GU32 1DJ

The Play Inspection Company Ltd, Unit 5 Glenmore Business Park, Blackhill Road, Holton Heath, Poole, Dorset, BH16 6NL

t: 01202 590675 e: info@playinspections.co.uk w: www.playinspections.co.uk

Freechimes (Soprano Pentatonic)

Assessment Date:	10th February 2023
Assessor:	Keith Dalton
Manufacturer:	Percussion Play Ltd
Risk Assessment:	Very Low Risk



Activity:
Use of musical playground equipment item

Number of Persons at Risk:
Users, plus spectators

Hazards Involved with the Activity:

- Collision

Safety Measures/Controls:

- The design of this musical item falls outside the scope of EN 1176; it is not intended to be used as play equipment. We have however, used our knowledge of EN 1176 in formulating this assessment and consider it to be safe when used as intended.
- There are no falling height requirements for this type of equipment.
- The challenge (risk) associated with the use of the equipment is clearly foreseeable by the users.
- Age range: the intended age range for this item of equipment is for children of 3 years of age and above.
- All items should be placed outside any free or falling space of playground items in the area; a circulation area of 1.50 metres should be allowed around the footprint of each item to allow free movement for spectators around the item without moving into the space required for the safe use of the equipment.
- Correct siting of the equipment item within the environment to ensure free passage of users around the area.
- Detailed inspection and maintenance procedures to be provided for the equipment providing guidance on allowable tolerances during normal operation.

© The Play Inspection Company Ltd

Risks remaining after the application of control measures:

Collision

With all control measures applied there will still be a risk remaining of users colliding with the equipment or with other users. It is considered that this remaining risk is of no significance, or any different from similar equipment item that incorporates this type of movement.

Given the provision of the safety measures detailed the remaining risk is considered to be 1 x 2 VERY LOW RISK

Additional Controls Required: None

Risk Rating:

	Likelihood		Severity
1	Very Unlikely	1	Minor abrasion, light bruising
2	Not Very Likely	2	Small cuts, light sprains, more severe abrasion
3	Will happen at some time	3	Deep cuts, severe sprains etc. requiring medical intervention
4	Likely to happen	4	Injury requiring medical intervention and hospitalisation
5	Almost Certain to Happen	5	Permanent disability/death

Risk Score	Description	Action Required
1 – 5	Very Low Risk	Maintain control measures
6 – 10	Low Risk	Review control measures
11 – 15	Moderate Risk	Improve control measures
16 – 20	High Risk	Prevent access to item
21 – 25	Very High Risk	Remove from site

To establish the risk score multiply Likelihood by Severity

Controls Adequate:

Signed:





Date: 10th February 2023
The Play Inspection Company Ltd

Assessment Review Date: 10th February 2024

© The Play Inspection Company Ltd



PercussionPlay®
Outdoor Musical Instruments

Stepping Stone



Description

Jump on these musical stepping stones to make a chord of chimes - irresistable, energetic fun!

Materials and Features

Stainless steel housing and sub frame.
Stainless steel fixings and internal mechanism.
Aluminum stepping plate.
Aluminum internal chimes.

Tuning and Sound Level Data

C-Major (C,E,G)
F-Major (F,A,C)
G-Major (G,B,D)

D-Minor (D,F,A)
E-Minor (E,G,B)
A-Minor (A,C,E)

165ft - 46dB
33ft - 53dB
10ft - 69dB

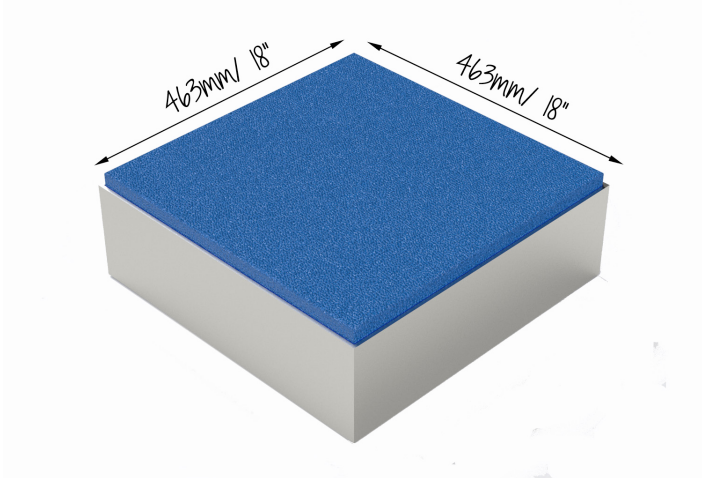

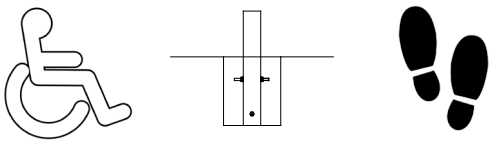

Packed Dimensions	Weight (lbs)	L (in)	H (in)	*W (in)*
Stepping Stone Box	62	21	21	8

Find more information and watch the video here.

Standard Compliance BS EN 1176
Warranty: Limited Twenty-Five (25), Limited Ten (10) Year & Limited Two (2) Year warranty
STEP/Issue 001

PercussionPlay®
Outdoor Musical Instruments

Temple Block Tree



Description

Inspired by the Muyu or slit drum from eastern Asia. With its resonant, durable reinforced polymer blocks in a natural stone color and polished stainless steel leg, this instrument produces a unique, hollow tone that will add a fun and dynamic sound to your compositions.

When struck with the included mallets, each block produces a satisfying 'pop' sound. Players can strike the blocks' top surface or rims to produce a hollow yet bright, penetrating sound. As an idiophone, the sound is produced by the vibration of the instrument itself, with each block's internal space functioning as a resonating chamber.

The Temple Block Tree features a 'branch' configuration of two sets of five blocks graduating in size, with the largest block producing the lowest sound and the smallest block having the highest sound.

Tuning and Sound Level Data

Unpitched Percussion

Materials and Features

316 mirror polished marine grade stainless steel stand.
Durable reinforced polymer blocks.
Vandal resistant fixings.

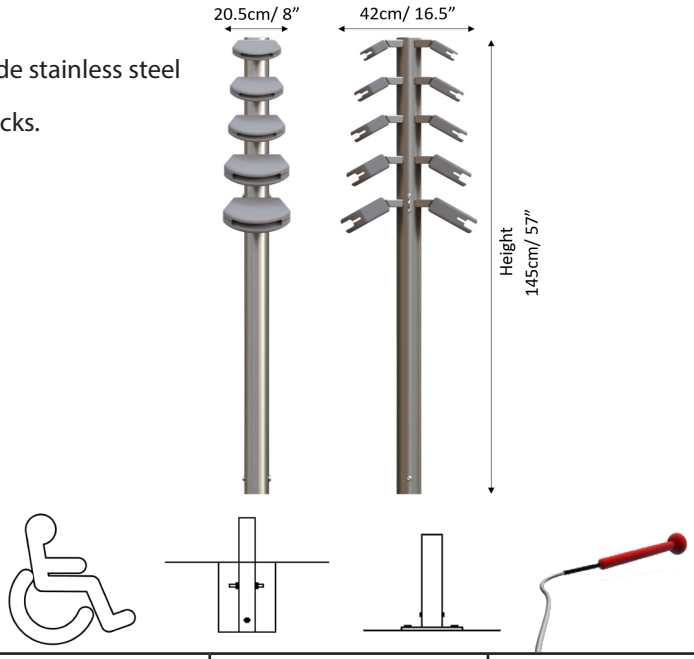

Packed Dimensions	Weight (lb)	L (in)	H (in)	W (in)
Box 1	31	77	4	6
Box 2	11	8	12	12

*Surface fixing instruments will include additional packages containing fixing plates.

Find more information here.

Warranty: Limited Twenty-Five (25), Limited Ten (10) Year & Limited Two (2) Year warranty
TEMP/Issue 001

Shade systems INC.
the coolest solutions under the sun®

STRUCTURAL CALCULATIONS

Project:

Shelter Cove Park - 9888-1

Location:

39 Shelter Cove Lane

Hilton Head Island, SC 29928

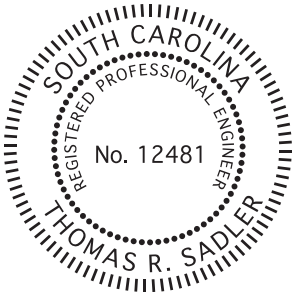

April 19, 2025

THE SADLER GROUP
Structural Engineers

500 Main Street, Suite 700
Fort Worth, Texas 76102-3944
(817) 332-1074

Table of Contents

Wind Loads **2**

RFEM Report **3**

Footing Design **14**

Baseplate **28**

THE SADLER GROUP	Project	25064A-Forever Lawn Sports Complex			Job Ref.	
	Section	Load Calculations			Sheet no./rev.	2
4055 International Plaza, Suite 540 Fort Worth, Texas 76109	Calc. by	Date	Chk'd by	Date		
	NRA	4/19/2025	TRS	4/19/2025		

Code Used:

International Building Code (IBC) 2021

ASCE 7-16 Minimum Design Loads for Buildings and Other Structures

Fabric load (w_f)	= 0.5	psf	
Roof load (w_r)	= 5	psf	
Wind Load:			
Basic Wind Speed without Fabric (V_{ult})	= 141	mph	Fig. 26.5-1 ASCE 7-16
Nominal Wind Speed without Fabric (V_n)	= 111	mph	
Basic Wind Speed with Fabric (V_{ut})	= 115	mph	See Owner Notes
Nominal Wind Speed with Fabric (V_{asd})	= 90	mph	See Owner Notes
Building Risk Category	= Type II		Table 1604.5 IBC 2021
Exposure Category	= C		Sec. 26.7.3 ASCE 7-16
Wind Pressure (p)	= q_hx G x C_N		Sec. 27.3.2 ASCE 7-16
Velocity pressure (q_h)	= 0.00256 x K_z x K_{zt} x K_d x K_exV^2		Sec. 26.10.2 ASCE 7-16
Velocity press. Exposure Coeff. (K_z)	= 0.85		Table 26.10-1 ASCE 7-16
Topographic Factor (K_{zt})	= 1.00		Sec. 26.8.2 ASCE 7-16
Wind directionality (K_d)	= 0.85		Table 26.6-1 ASCE 7-16
Ground Elevation Factor (K_e)	= 1.00		Table 26.9-1 ASCE 7-16
Guest Effect Factor (G)	= 0.85		Sec. 26.11 ASCE 7-16
Hip Like Structure			
Net Press. Coeff. Load Case A (C_{NWA})	= 1.10		Fig. 27.3-5 ASCE 7-16
Net Press. Coeff. Load Case A (C_{NLA})	= -0.40		Fig. 27.3-5 ASCE 7-16
Net Press. Coeff. Load Case B (C_{NWB})	= 0.1		Fig. 27.3-5 ASCE 7-16
Net Press. Coeff. Load Case B (C_{NLB})	= -1.1		Fig. 27.3-5 ASCE 7-16
Velocity Press.Load Case A (C_{NWA})	= **22.9**	psf	=0.00256*Kz*kzt*Kd*Ke*Vut^2*G*Cnwa
Net Press. Coeff. Load Case A (C_{NLA})	= **-8.3**	psf	=0.00256*Kz*kzt*Kd*Ke*Vut^2*G*Cnla
Net Press. Coeff. Load Case B (C_{NWB})	= **2.1**	psf	=0.00256*Kz*kzt*Kd*Ke*Vut^2*G*Cnwb
Net Press. Coeff. Load Case B (C_{NLB})	= **-22.9**	psf	=0.00256*Kz*kzt*Kd*Ke*Vut^2*G*Cnlb
Monoslope Like Structure			
Net Press. Coeff. Load Case A (C_{NWA})	= 1.20		Fig. 27.3-5 ASCE 7-16
Net Press. Coeff. Load Case A (C_{NLA})	= 0.30		Fig. 27.3-5 ASCE 7-16
Net Press. Coeff. Load Case B (C_{NWB})	= -1.1		Fig. 27.3-5 ASCE 7-16
Net Press. Coeff. Load Case B (C_{NLB})	= -0.1		Fig. 27.3-5 ASCE 7-16
Velocity Press.Load Case A (C_{NWA})	= **25.0**	psf	=0.00256*Kz*kzt*Kd*Ke*Vut^2*G*Cnwa
Net Press. Coeff. Load Case A (C_{NLA})	= **6.2**	psf	=0.00256*Kz*kzt*Kd*Ke*Vut^2*G*Cnla
Net Press. Coeff. Load Case B (C_{NWB})	= **-22.9**	psf	=0.00256*Kz*kzt*Kd*Ke*Vut^2*G*Cnwb
Net Press. Coeff. Load Case B (C_{NLB})	= **-2.1**	psf	=0.00256*Kz*kzt*Kd*Ke*Vut^2*G*Cnlb

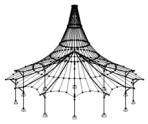

The Sadler Group
+1 817 332 1074
4055 International Plaza, Suite 540 Fort Worth, Texas 76109

Project: SS | Model: Shelter Cove Park - 9888-1 | Date: 4/21/2025
SHADE SYSTEMS

MODEL - GENERAL DATA

General	Model name	:	Shelter Cove Park - 9888-1	
	Project name	:	SS	
	Project description	:	SHADE SYSTEMS	
	Type of model	:	3D	
	Positive direction of global axis Z	:	Upward	
	Classification of load cases and combinations	:	According to Standard: ASCE 7-16 National Annex: None	
	☒ Automatically create combinations	:	☒ Load Combinations	

Options	☒ RF-FORM-FINDING - Find initial equilibrium shapes of membrane and cable structures	
	☐ RF-CUTTING-PATTERN	
	☐ Piping analysis	
	☐ Use CQC Rule	
	☐ Enable CAD/BIM model	
	Standard Gravity	
	g : 32.17 ft/s²	

FE MESH SETTINGS

General	Target length of finite elements	l_{FE}	:	1.00 ft
	Maximum distance between a node and a line to integrate it into the line	ε	:	0.00 ft
	Maximum number of mesh nodes (in thousands)		:	500
Members	Number of divisions of members with cable, elastic foundation, taper, or plastic characteristic		:	10
	☒ Activate member divisions for large deformation or post-critical analysis			
	☒ Use division for members with node lying on them			
Surfaces	Maximum ratio of FE rectangle diagonals	Δ_D	:	1.80
	Maximum out-of-plane inclination of two finite elements	α	:	0.50 °
	Shape direction of finite elements		:	Triangles and quadrangles ☒ Same squares where possible

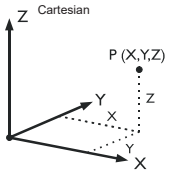

1.1 NODES

Node No.	Node Type	Reference Node	Coordinate System	Node Coordinates X [ft]	Y [ft]	Z [ft]	Comment
1	Standard	-	Cartesian	0.00	0.00	0.00	Supported
2	Standard	-	Cartesian	53.25	0.00	0.00	Supported
3	Standard	-	Cartesian	0.00	0.00	14.00	
4	Standard	-	Cartesian	53.25	0.00	12.00	
5	Standard	-	Cartesian	0.00	0.00	10.00	
6	Standard	-	Cartesian	7.19	11.93	15.74	
9	Standard	-	Cartesian	13.60	26.74	0.00	Supported
10	Standard	-	Cartesian	13.60	26.74	18.00	
11	Standard	-	Cartesian	-30.37	39.72	0.00	Supported
12	Standard	-	Cartesian	-30.37	39.72	16.00	
13	Standard	-	Cartesian	13.60	26.74	16.00	
14	Standard	-	Cartesian	13.60	26.74	12.00	
15	Standard	-	Cartesian	4.57	36.35	15.08	
16	Standard	-	Cartesian	43.55	25.02	0.00	Supported
17	Standard	-	Cartesian	43.55	25.02	14.00	
18	Standard	-	Cartesian	29.38	24.83	15.86	
19	Standard	-	Cartesian	-2.85	46.75	0.00	Supported
20	Standard	-	Cartesian	-2.85	46.75	14.00	
21	Standard	-	Cartesian	-2.85	46.75	10.00	
22	Standard	-	Cartesian	20.04	37.27	13.90	
26	Standard	-	Cartesian	27.64	47.42	0.00	Supported
27	Standard	-	Cartesian	27.64	47.42	16.00	

1.2 LINES

Line No.	Line Type	Nodes No.	Line Length L [ft]		Comment
1	Polyline	12,20	28.48		
2	Arc	3,6,10	30.35		
3	Polyline	9,10	18.00	Z	
4	Polyline	10,4	48.19		
5	Polyline	4,3	53.29	XZ	
6	Polyline	17,4	26.90		
7	Arc	10,18,17	30.35		
8	Polyline	5,12	50.36		
9	Polyline	12,13	45.85	XY	
10	Polyline	13,5	30.59		
11	Polyline	21,27	31.08		
12	Arc	20,15,13	26.07		
13	Arc	14,22,27	25.36		
14	Polyline	14,27	25.32		
15	Polyline	14,21	25.99		
16	Polyline	27,17	27.55		
18	Polyline	17,14	30.07		
26	Polyline	11,12	16.00	Z	

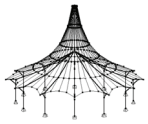

The Sadler Group
+1 817 332 1074
4055 International Plaza, Suite 540 Fort Worth, Texas 76109

Project: SS
SHADE SYSTEMS
Model: Shelter Cove Park - 9888-1
Date: 4/21/2025

1.2 LINES

Line No.	Line Type	Nodes No.	Line Length L [ft]		Comment
28	Polyline	19,20	14.00	Z	
29	Polyline	26,27	16.00	Z	
30	Polyline	16,17	14.00	Z	
31	Polyline	2,4	12.00	Z	
32	Polyline	1,3	14.00	Z	

1.3 MATERIALS

Matl. No.	Modulus E [psi]	Modulus G [psi]	Poisson's Ratio ν [-]	Spec. Weight γ [lbf/ft^3]	Coeff. of Th. Ex α [1/°F]	Partial Factor γ_M [-]	Material Model
1	CABLE						
	18854900.0	7251890.0	0.300	499.43	8.89E-06	1.10	Isotropic Linear Elastic
	User-Defined Material						
2	Steel A500, Grade B (Rounds) | ANSI/AISC 360-16:2016						
	29000000.0	11200000.0	0.295	490.00	6.67E-06	1.00	Isotropic Linear Elastic
3	HDPE						
				0.00E+00	0.00E+00	1.00	Orthotropic Elastic 2D...
	Additional material parameters are defined in the Material Model dialog box						

1.3.5 MATERIALS - MATERIAL MODEL - ORTHOTROPIC ELASTIC 2D

Matl. No.	Modulus of Elasticity [psi]		Shear Modulus [psi]			Poisson's Ratio[-]		
	E_x	E_y	G_{yz}	G_{xz}	G_{xy}	ν_{xy}	ν_{yx}	
3	HDPE							
	1236.0	11665.0	15000.0	15000.0	15000.0	0.300	2.831	

The Sadler Group
+1 817 332 1074
4055 International Plaza, Suite 540 Fort Worth, Texas 76109

MODEL

Surface Numbering
Line Numbering
Node Numbering
Member Numbering
Support Numbering

Isometric

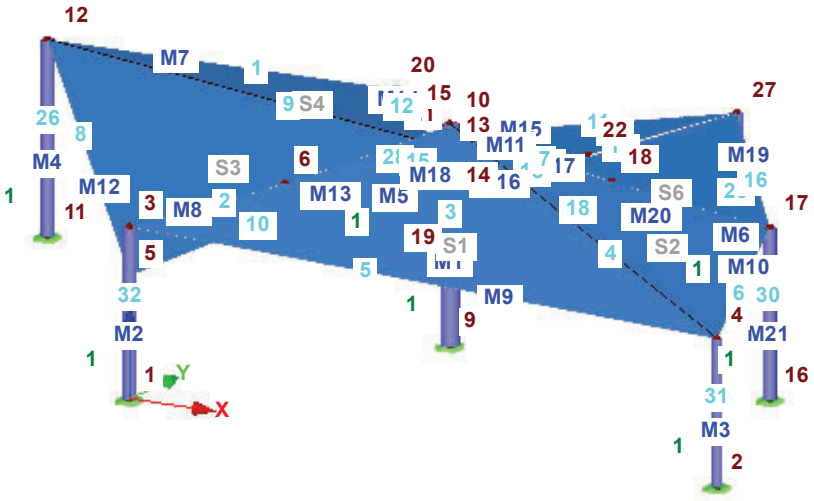

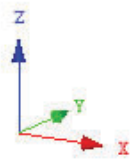

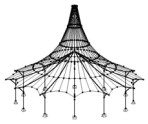

The Sadler Group
+1 817 332 1074
4055 International Plaza, Suite 540 Fort Worth, Texas 76109

Project: SS
SHADE SYSTEMS
Model: Shelter Cove Park - 9888-1
Date: 4/21/2025

1.4 SURFACES

Surface No.	Surface Type: Geometry	Surface Type: Stiffness	Boundary Lines No.	Matl. No.	Thickness: Type	Thickness: d [in]	Area A [ft²]	Weight W [lb]
1	Plane	Membrane - Orthotropic	2,4,5	3	Constant	0.08	128.68	0.00
2	Plane	Membrane - Orthotropic	4,6,7	3	Constant	0.08	74.70	0.00
3	Plane	Membrane - Orthotropic	8-10	3	Constant	0.08	141.56	0.00
4	Plane	Membrane - Orthotropic	1,9,12	3	Constant	0.08	79.90	0.00
5	Plane	Membrane - Orthotropic	11,13,15	3	Constant	0.08	61.11	0.00
6	Plane	Membrane - Orthotropic	14,16,18	3	Constant	0.08	65.88	0.00

1.4.3 SURFACES - FORM-FINDING

Surface No.	Calculation Method	Specify Forces: $n_{x'}$ [kip/ft]	Specify Forces: $n_{y'}$ [kip/ft]	Specify Stress: $\sigma_{x'}$ [ksi]	Specify Stress: $\sigma_{y'}$ [ksi]	Interior Pressure: p_p [ksi]	
1	Standard	0.01	0.01	0.01	0.01	0.000	
2	Standard	0.01	0.01	0.01	0.01	0.000	
3	Standard	0.01	0.01	0.01	0.01	0.000	
4	Standard	0.01	0.01	0.01	0.01	0.000	
5	Standard	0.01	0.01	0.01	0.01	0.000	
6	Standard	0.01	0.01	0.01	0.01	0.000	

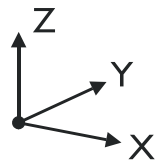

1.7 NODAL SUPPORTS

Support No.	Nodes No.	Axis System	Column in Z	Support Conditions: u_X	u_Y	u_Z	φ_X	φ_Y	φ_Z
1	1,2,9,11,16,19,26	Global X,Y,Z	☐	☒	☒	☒	☒	☒	☒

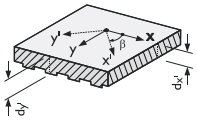

1.12 ORTHOTROPIC SURFACES AND MEMBRANES

Surface No.	Definition Type	Orthotropy Direction β [°]	Stiffness Reduction Factors: k [-]	k_b [-]	k_{33} [-]	k_s [-]	k_{44} [-]	k_{55} [-]	k_m [-]	k_{88} [-]	k_e [-]
1	Constant thickness	0.00	1.00	-	-	-	-	-	-		-
2	Constant thickness	0.00	1.00	-	-	-	-	-	-		-
3	Constant thickness	0.00	1.00	-	-	-	-	-	-		-
4	Constant thickness	0.00	1.00	-	-	-	-	-	-		-
5	Constant thickness	0.00	1.00	-	-	-	-	-	-		-
6	Constant thickness	0.00	1.00	-	-	-	-	-	-		-

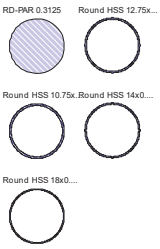

1.13 CROSS-SECTIONS

Section No.	Matl. No.	J [in⁴] / A [in²]	I_y [in⁴] / A_y [in²]	I_z [in⁴] / A_z [in²]	Principal Axes α [°]	Rotation α' [°]	Overall Dimensions [in]: Width b	Height h
1	RD-PAR 0.3125							
	1	0.0	0.0	0.0	0.00	0.00	0.31	0.31
		0.1	0.1	0.1				
2	Round HSS 12.75x0.375 | AISC 14							
	2	523.0	262.0	262.0	0.00	0.00	12.75	12.75
		13.6	8.7	8.7				
3	Round HSS 10.75x0.375 | AISC 14							
	2	309.0	154.0	154.0	0.00	0.00	10.75	10.75
		11.4	7.3	7.3				
4	Round HSS 14x0.375 | AISC 14							
	2	698.0	349.0	349.0	0.00	0.00	14.00	14.00
		15.0	9.5	9.5				
5	Round HSS 18x0.375 | AISC 14							
	2	1510.0	754.0	754.0	0.00	0.00	18.00	18.00
		19.4	12.4	12.4				

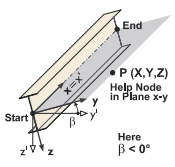

1.17 MEMBERS

Mbr. No.	Line No.	Member	Rotation Type	Rotation β [°]	Cross-Section Start	Cross-Section End	Hinge No. Start	Hinge No. End	Ecc. No.	Div. No.	Length L [ft]	
1	3	Beam	Angle	0.00	5	5	-	-	-	-	18.00	Z
2	32	Beam	Angle	0.00	4	4	-	-	-	-	14.00	Z
3	31	Beam	Angle	0.00	3	3	-	-	-	-	12.00	Z
4	26	Beam	Angle	0.00	2	2	-	-	-	-	16.00	Z
5	28	Beam	Angle	0.00	2	2	-	-	-	-	14.00	Z
6	29	Beam	Angle	0.00	2	2	-	-	-	-	16.00	Z
7	1	Cable	Angle	0.00	1	1	-	-		-	28.48	
8	2	Cable	Angle	0.00	1	1	-	-		-	30.35	
9	5	Cable	Angle	0.00	1	1	-	-		-	53.29	XZ
10	6	Cable	Angle	0.00	1	1	-	-		-	26.90	
11	7	Cable	Angle	0.00	1	1	-	-		-	30.35	
12	8	Cable	Angle	0.00	1	1	-	-		-	50.36	
13	10	Cable	Angle	0.00	1	1	-	-		-	30.59	
14	12	Cable	Angle	0.00	1	1	-	-		-	26.07	

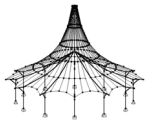

The Sadler Group
+1 817 332 1074
4055 International Plaza, Suite 540 Fort Worth, Texas 76109

Project: SS
SHADE SYSTEMS
Model: Shelter Cove Park - 9888-1
Date: 4/21/2025

1.17 MEMBERS

Mbr. No.	Line No.	Member	Rotation Type	Rotation β [°]	Cross-Section Start	Cross-Section End	Hinge No. Start	Hinge No. End	Ecc. No.	Div. No.	Length L [ft]	
15	11	Cable	Angle	0.00	1	1	-	-		-	31.08	
16	13	Cable	Angle	0.00	1	1	-	-		-	25.36	
17	14	Cable	Angle	0.00	1	1	-	-		-	25.32	
18	15	Cable	Angle	0.00	1	1	-	-		-	25.99	
19	16	Cable	Angle	0.00	1	1	-	-		-	27.55	
20	18	Cable	Angle	0.00	1	1	-	-		-	30.07	
21	30	Beam	Angle	0.00	2	2	-	-	-	-	14.00	Z

1.17.6 MEMBERS - FORM-FINDING

Mbr. No.	Target cable length absolute L_c [ft]	Target cable length relative L_{rel} [%]	Target cable sag absolute S [ft]	Target cable sag relative S_{rel} [%]	Force density T_d [kip/ft]	Average force in cable T [kip]	Internal Forces Beam Definition
7	33.01	115.91	7.12	25.00	-	-	-
8	35.08	115.57	7.59	25.00	-	-	-
9	61.77	115.91	13.32	25.00	-	-	-
10	31.19	115.91	6.73	25.00	-	-	-
11	35.08	115.57	7.59	25.00	-	-	-
12	58.37	115.91	12.59	25.00	-	-	-
13	35.46	115.91	7.65	25.00	-	-	-
14	30.12	115.56	6.52	25.00	-	-	-
15	33.70	108.43	5.60	18.00	-	-	-
16	27.45	108.27	4.56	18.00	-	-	-
17	27.45	108.43	4.56	18.00	-	-	-
18	28.18	108.43	4.68	18.00	-	-	-
19	29.88	108.43	4.96	18.00	-	-	-
20	32.60	108.43	5.41	18.00	-	-	-

2.1 LOAD CASES

Load Case	Load Case Description	ASCE 7-16 Action Category	Self-Weight - Factor in Direction Active	X	Y	Z
LC1	DL	Dead	☒	0.000	0.000	-1.000
LC2	LL	Live	☐			
LC3	WL A	Wind	☐			
LC4	WL B	Wind	☐			
Form-Finding			☐			

2.5 LOAD COMBINATIONS

Load Combin.	DS	Load Combination Description	No.	Factor	Load Case	
CO1	-	D	1	1.00	LC1	DL
CO2	-	D + L	1	1.00	LC1	DL
			2	1.00	LC2	LL
CO3	-	D + 0.6W1	1	1.00	LC1	DL
			2	0.60	LC3	WL A
CO4	-	D + 0.6W2	1	1.00	LC1	DL
			2	0.60	LC4	WL B
CO5	-	D + 0.75L + 0.45W1	1	1.00	LC1	DL
			2	0.75	LC2	LL
			3	0.45	LC3	WL A
CO6	-	D + 0.75L + 0.45W2	1	1.00	LC1	DL
			2	0.75	LC2	LL
			3	0.45	LC4	WL B
CO7	-	0.6D + 0.6W1	1	0.60	LC1	DL
			2	0.60	LC3	WL A
CO8	-	0.6D + 0.6W2	1	0.60	LC1	DL
			2	0.60	LC4	WL B

2.7 RESULT COMBINATIONS

Result Combin	Description	Loading
RC1		CO1/p or to CO8

LC1
DL

3.4 SURFACE LOADS

LC1: DL

No.	On Surfaces No.	Load Type	Load Distribution	Load Direction	Load Parameters Symbol	Value	Unit
1	1-6	Force	Uniform	ZL	p	-0.500	psf

LC2
LL

3.4 SURFACE LOADS

LC2: LL

No.	On Surfaces No.	Load Type	Load Distribution	Load Direction	Load Parameters Symbol	Value	Unit
1	1-6	Force	Uniform	ZL	p	-5.000	psf

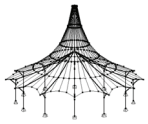

The Sadler Group
+1 817 332 1074
4055 International Plaza, Suite 540 Fort Worth, Texas 76109

Project: SS
SHADE SYSTEMS
Model: Shelter Cove Park - 9888-1
Date: 4/21/2025

LC3
WL A

3.4 SURFACE LOADS

LC3: WL A

No.	On Surfaces No.	Load Type	Load Distribution	Load Direction	Load Parameters Symbol	Value	Unit	On Node No.
1	1,4	Force	Uniform	z	p	-22.900	psf	
2	2,3	Force	Uniform	z	p	8.300	psf	
3	6	Force	Linear	z	p_1	-25.000	psf	27
					p_2	-6.200	psf	17
					p_3	-6.200	psf	14
4	5	Force	Linear	z	p_1	-25.000	psf	27
					p_2	-6.200	psf	21
					p_3	-6.200	psf	14

LC4
WL B

3.4 SURFACE LOADS

LC4: WL B

No.	On Surfaces No.	Load Type	Load Distribution	Load Direction	Load Parameters Symbol	Value	Unit	On Node No.
1	1,4	Force	Uniform	z	p	22.900	psf	
2	2,3	Force	Uniform	z	p	-2.100	psf	
3	5	Force	Linear	z	p_1	22.900	psf	27
					p_2	2.100	psf	21
					p_3	2.100	psf	14
4	6	Force	Linear	z	p_1	22.900	psf	27
					p_2	2.100	psf	17
					p_3	2.100	psf	14

4.1 NODES - SUPPORT FORCES

Node No.	LC/CO	Support Forces [kip] $P_{X'}$	$P_{Y'}$	$P_{Z'}$	Support Moments [kipft] $M_{X'}$	$M_{Y'}$	$M_{Z'}$	
1	Form-Finding	0.288	0.569	0.074	-6.559	4.075	0.000	
	CO1	0.546	0.942	-0.693	-11.112	7.706	0.000	
	CO2	1.962	4.160	-0.615	-47.832	27.825	0.000	
	CO3	2.805	4.893	-0.513	-57.866	39.710	0.000	
	CO4	3.293	5.362	0.311	-63.023	46.599	0.000	
	CO5	2.972	5.329	-0.626	-62.834	42.110	0.000	
	CO6	1.711	3.240	-0.351	-37.333	24.207	0.000	
	CO7	2.767	4.842	-0.191	-57.223	39.168	0.000	
	CO8	3.351	5.500	0.662	-64.568	47.416	0.000	
2	Form-Finding	-0.278	0.234	0.033	-2.803	-3.338	0.000	
	CO1	-0.701	0.578	-0.447	-6.942	-8.416	0.000	
	CO2	-2.676	2.199	-0.434	-26.391	-32.123	0.000	
	CO3	-3.637	2.936	-0.375	-35.234	-43.643	0.000	
	CO4	-2.816	2.425	0.098	-29.086	-33.769	0.000	
	CO5	-4.031	3.256	-0.430	-39.080	-48.374	0.000	
	CO6	-1.391	1.204	-0.297	-14.449	-16.689	0.000	
	CO7	-3.572	2.885	-0.169	-34.618	-42.865	0.000	
	CO8	-2.872	2.474	0.317	-29.666	-34.435	0.000	
9	Form-Finding	0.196	0.254	-0.036	-1.679	2.264	0.000	
	CO1	0.305	0.239	-1.521	0.317	3.995	0.000	
	CO2	0.569	0.350	-2.956	7.827	7.373	0.000	
	CO3	2.023	0.253	-2.945	13.044	29.655	0.000	
	CO4	1.644	-0.536	-1.049	21.325	24.931	0.000	
	CO5	1.811	0.415	-3.554	12.732	26.228	0.000	
	CO6	-0.325	-0.517	-1.760	13.681	-4.822	0.000	
	CO7	2.000	0.229	-2.374	13.061	29.328	0.000	
	CO8	1.687	-0.508	-0.506	21.244	25.511	0.000	
11	Form-Finding	0.341	-0.089	-0.025	1.425	5.453	0.000	
	CO1	0.707	-0.196	-0.875	3.144	11.326	0.000	
	CO2	2.992	-0.847	-1.276	13.562	47.933	0.000	
	CO3	2.326	-0.571	-1.105	9.148	37.245	0.000	
	CO4	1.835	-0.422	-0.827	6.763	29.382	0.000	
	CO5	3.165	-0.838	-1.307	13.425	50.699	0.000	
	CO6	1.882	-0.532	-0.990	8.522	30.133	0.000	
	CO7	2.261	-0.553	-0.771	8.851	36.211	0.000	
	CO8	1.881	-0.432	-0.504	6.910	30.112	0.000	
16	Form-Finding	-0.504	-0.038	0.008	0.530	-7.060	0.000	
	CO1	-0.796	-0.156	-0.733	2.187	-11.151	0.000	
	CO2	-2.658	-0.725	-1.044	10.153	-37.240	0.000	
	CO3	-3.407	-1.012	-0.981	14.177	-47.730	0.000	
	CO4	-3.543	-1.787	-0.207	25.016	-49.594	0.000	
	CO5	-3.802	-1.061	-1.156	14.869	-53.281	0.000	
	CO6	-1.547	-1.040	-0.674	14.566	-21.667	0.000	
	CO7	-3.346	-1.004	-0.684	14.063	-46.862	0.000	
	CO8	-3.628	-1.812	0.097	25.356	-50.769	0.000	
19	Form-Finding	0.246	-0.417	0.062	5.254	2.242	0.000	
	CO1	0.393	-0.619	-0.640	7.717	3.591	0.000	
	CO2	1.148	-2.749	-0.789	35.613	10.293	0.000	
	CO3	1.510	-3.156	-0.839	40.510	13.775	0.000	
	CO4	0.837	-3.115	0.044	41.019	6.730	0.000	
	CO5	1.737	-3.409	-0.934	43.565	15.960	0.000	
	CO6	0.220	-1.837	-0.534	24.778	1.179	0.000	
	CO7	1.472	-3.125	-0.548	40.167	13.402	0.000	
	CO8	0.875	-3.221	0.358	42.388	7.070	0.000	
26	Form-Finding	-0.289	-0.513	-0.116	8.206	-4.619	0.000	
	CO1	-0.454	-0.789	-1.011	12.635	-7.276	0.000	

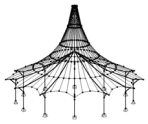

The Sadler Group
+1 817 332 1074
4055 International Plaza, Suite 540 Fort Worth, Texas 76109

4.1 NODES - SUPPORT FORCES

Node No.	LC/CO	Support Forces [kip] $P_{X'}$	$P_{Y'}$	$P_{Z'}$	Support Moments [kipft] $M_{X'}$	$M_{Y'}$	$M_{Z'}$
	CO2	-1.337	-2.388	-1.594	38.278	-21.436	0.000
	CO3	-1.605	-2.961	-1.858	47.480	-25.731	0.000
	CO4	-1.188	-2.168	-1.042	34.714	-19.024	0.000
	CO5	-1.850	-3.372	-2.030	54.086	-29.667	0.000
	CO6	-0.506	-0.772	-0.971	12.354	-8.097	0.000
	CO7	-1.567	-2.896	-1.511	46.429	-25.120	0.000
	CO8	-1.231	-2.240	-0.726	35.858	-19.705	0.000
Σ Supp.	LC5005	0.000	0.000	0.000			
Σ Loads	LC5005	0.000	0.000	0.000			
Σ Supp.	CO1	0.000	0.000	-5.920			
Σ Supp.	CO1	0.000	0.000	-5.920			
Σ Supp.	CO2	0.000	0.000	-8.707			
Σ Supp.	CO2	0.000	0.000	-8.707			
Σ Supp.	CO3	0.015	0.382	-8.617			
Σ Supp.	CO3	0.015	0.382	-8.617			
Σ Supp.	CO4	0.063	-0.241	-2.671			
Σ Supp.	CO4	0.063	-0.241	-2.671			
Σ Supp.	CO5	0.002	0.319	-10.038			
Σ Supp.	CO5	0.002	0.319	-10.038			
Σ Supp.	CO6	0.044	-0.254	-5.576			
Σ Supp.	CO6	0.044	-0.254	-5.576			
Σ Supp.	CO7	0.015	0.378	-6.248			
Σ Supp.	CO7	0.015	0.378	-6.248			
Σ Supp.	CO8	0.064	-0.237	-0.302			
Σ Supp.	CO8	0.064	-0.237	-0.302			

4.1 NODES - SUPPORT FORCES

Result Combinations

Node No.	RC		Support Forces [kip] $P_{X'}$	$P_{Y'}$	$P_{Z'}$	Support Moments [kipft] $M_{X'}$	$M_{Y'}$	$M_{Z'}$
1	RC1	Max	3.351	5.500	0.662	-11.112	47.416	0.000
		Min	0.546	0.942	-0.693	-64.568	7.706	0.000
2	RC1	Max	-0.701	3.256	0.317	-6.942	-8.416	0.000
		Min	-4.031	0.578	-0.447	-39.080	-48.374	0.000
9	RC1	Max	2.023	0.415	-0.506	21.325	29.655	0.000
		Min	-0.325	-0.536	-3.554	0.317	-4.822	0.000
11	RC1	Max	3.165	-0.196	-0.504	13.562	50.699	0.000
		Min	0.707	-0.847	-1.307	3.144	11.326	0.000
16	RC1	Max	-0.796	-0.156	0.097	25.356	-11.151	0.000
		Min	-3.802	-1.812	-1.156	2.187	-53.281	0.000
19	RC1	Max	1.737	-0.619	0.358	43.565	15.960	0.000
		Min	0.220	-3.409	-0.934	7.717	1.179	0.000
26	RC1	Max	-0.454	-0.772	-0.726	54.086	-7.276	0.000
		Min	-1.850	-3.372	-2.030	12.354	-29.667	0.000

The Sadler Group
+1 817 332 1074
4055 International Plaza, Suite 540 Fort Worth, Texas 76109

GLOBAL DEFORMATIONS u

RC1 : CO1/p or to CO8
Global Deformations u [in]
Result Combinations: Max and Min Values

Isometric

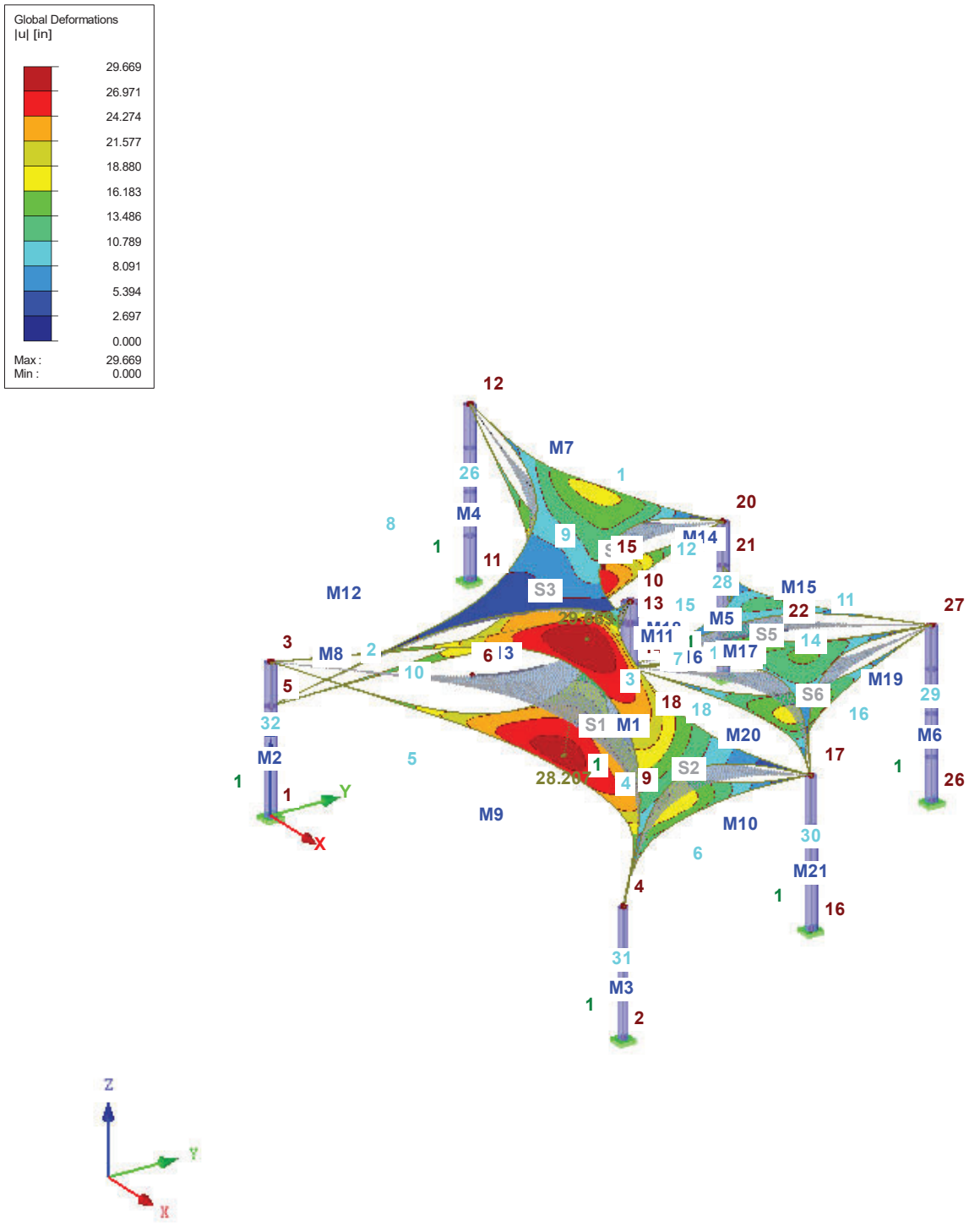

Factor of deformations: 2.10
Max u: 29.669, Min u: 0.000 in

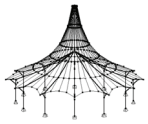

The Sadler Group
+1 817 332 1074
4055 International Plaza, Suite 540 Fort Worth, Texas 76109

Project: SS
SHADE SYSTEMS
Model: Shelter Cove Park - 9888-1
Date: 4/21/2025

RF-STEEL AISC
CA1
Design of steel members according to AISC (LRFD or ASD)

1.1 GENERAL DATA

Members to design:	1-6,21	
Sets of members to design:		
Standard:	ASD 2005	
Ultimate Limit State Design		
Result combinations to design:	RC1	CO1/p or to CO8

1.2 MATERIALS

Matl. No.	Material Description	E- Modulus E [ksi]	Shear Modulus G [ksi]	Poisson's Ratio ν [-]	Yield Stress f_{yk} [ksi]	Max. Thickness t [in]
2	Steel A500, Grade B (Rounds) | ANSI/AISC 360-16:2016	29000.000	11200.000	0.300	42.000	

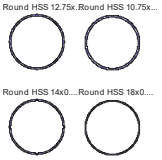

1.3 CROSS-SECTIONS

Sect. No.	Matl. No.	Cross-Section Description	Cross-Section Type	Max Design Ratio	Comment
2	2	Round HSS 12.75x0.375 | AISC 14	Pipe	0.55	
3	2	Round HSS 10.75x0.375 | AISC 14	Pipe	0.78	
4	2	Round HSS 14x0.375 | AISC 14	Pipe	0.59	
5	2	Round HSS 18x0.375 | AISC 14	Pipe	0.15	

1.5 EFFECTIVE LENGTHS - MEMBERS

Member No.	Buckli Possi	Length L [ft]	Buckling About Axis Possi	K_y	L [ft]	Buckling About Axis Possi	K_z	L [ft]	Torsional Buckling Possi	K_x	L [ft]	L.T.B Possi	M_e [kipft]	L_b [ft]	k_z	k_w
1	☒	18.00	☒	1.00	10.00	☒	1.00	10.00	☒	1.00	10.00	☐	Eigenvalue		1.0	1.0
2	☒	14.00	☒	1.00	8.00	☒	1.00	8.00	☒	1.00	8.00	☐	Eigenvalue		1.0	1.0
3	☒	12.00	☒	1.00	10.00	☒	1.00	10.00	☒	1.00	10.00	☐	Eigenvalue		1.0	1.0
4	☒	16.00	☒	1.00	8.00	☒	1.00	8.00	☒	1.00	8.00	☐	Eigenvalue		1.0	1.0
5	☒	14.00	☒	1.00	11.00	☒	1.00	11.00	☒	1.00	11.00	☐	Eigenvalue		1.0	1.0
6	☒	16.00	☒	1.00	16.00	☒	1.00	16.00	☒	1.00	16.00	☐	Eigenvalue		1.0	1.0
21	☒	14.00	☒	1.00	14.00	☒	1.00	14.00	☒	1.00	14.00	☐	Eigenvalue		1.0	1.0

1.7 DESIGN PARAMETERS

Member No.	Modification Factor C_b [-]	Distance L_v [ft]	Gross Area A_g [in²]	Net Area A_n [in²]	Shear Lag Factor U [-]	Effective Area A_e [in²]	Comment
1		18.00	19.4	19.4	1.000	19.4	
2		14.00	15.0	15.0	1.000	15.0	
3		12.00	11.4	11.4	1.000	11.4	
4		16.00	13.6	13.6	1.000	13.6	
5		14.00	13.6	13.6	1.000	13.6	
6		16.00	13.6	13.6	1.000	13.6	
21		14.00	13.6	13.6	1.000	13.6	

2.4 DESIGN BY MEMBER

Member No.	Location x [ft]	LC/CO/ RC	Design		Equation No.	Description
1	**Cross-section No. 5 - Round HSS 18x0.375 | AISC 14**					
	6.00	RC1	0.01	≤ 1	100)	Negligible internal forces
	0.00	RC1	0.15	≤ 1	106)	Chapter F - Yielding - Bending about y-axis and/or z-axis acc. to F8 or F11
	0.00	RC1	0.15	≤ 1	132)	Chapter F - Local buckling of round HSS - acc. to F8
	16.00	RC1	0.03	≤ 1	162)	Chapter G - Nominal shear strength in y-axis and/or z-axis - acc. to G6
	0.00	RC1	0.15	≤ 1	331)	Chapter H - Biaxial bending without axial forces - acc. to H1.1
2	**Cross-section No. 4 - Round HSS 14x0.375 | AISC 14**					
	14.00	RC1	0.00	≤ 1	100)	Negligible internal forces
	0.00	RC1	0.59	≤ 1	106)	Chapter F - Yielding - Bending about y-axis and/or z-axis acc. to F8 or F11
	0.00	RC1	0.00	≤ 1	131)	Chapter F - Local buckling of round HSS does not Apply - acc. to F8
	0.00	RC1	0.06	≤ 1	162)	Chapter G - Nominal shear strength in y-axis and/or z-axis - acc. to G6
	0.00	RC1	0.59	≤ 1	331)	Chapter H - Biaxial bending without axial forces - acc. to H1.1
3	**Cross-section No. 3 - Round HSS 10.75x0.375 | AISC 14**					
	12.00	RC1	0.01	≤ 1	100)	Negligible internal forces
	0.00	RC1	0.78	≤ 1	106)	Chapter F - Yielding - Bending about y-axis and/or z-axis acc. to F8 or F11
	0.00	RC1	0.00	≤ 1	131)	Chapter F - Local buckling of round HSS does not Apply - acc. to F8
	4.00	RC1	0.06	≤ 1	162)	Chapter G - Nominal shear strength in y-axis and/or z-axis - acc. to G6
	0.00	RC1	0.78	≤ 1	331)	Chapter H - Biaxial bending without axial forces - acc. to H1.1
4	**Cross-section No. 2 - Round HSS 12.75x0.375 | AISC 14**					
	16.00	RC1	0.01	≤ 1	100)	Negligible internal forces
	0.00	RC1	0.47	≤ 1	106)	Chapter F - Yielding - Bending about y-axis and/or z-axis acc. to F

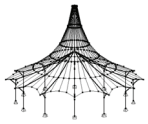

The Sadler Group
+1 817 332 1074
4055 International Plaza, Suite 540 Fort Worth, Texas 76109

2.4 DESIGN BY MEMBER

Member No.	Location x [ft]	LC/CO/ RC	Design		Equation No.	Description
						F8 or F11
	0.00	RC1	0.00	≤ 1	131)	Chapter F - Local buckling of round HSS does not Apply - acc. to F8
	8.00	RC1	0.03	≤ 1	162)	Chapter G - Nominal shear strength in y-axis and/or z-axis - acc. to G6
	0.00	RC1	0.47	≤ 1	331)	Chapter H - Biaxial bending without axial forces - acc. to H1.1
5	**Cross-section No. 2 - Round HSS 12.75x0.375 | AISC 14**					
	14.00	RC1	0.00	≤ 1	100)	Negligible internal forces
	0.00	RC1	0.41	≤ 1	106)	Chapter F - Yielding - Bending about y-axis and/or z-axis acc. to F8 or F11
	0.00	RC1	0.00	≤ 1	131)	Chapter F - Local buckling of round HSS does not Apply - acc. to F8
	5.00	RC1	0.04	≤ 1	162)	Chapter G - Nominal shear strength in y-axis and/or z-axis - acc. to G6
	0.00	RC1	0.41	≤ 1	331)	Chapter H - Biaxial bending without axial forces - acc. to H1.1
6	**Cross-section No. 2 - Round HSS 12.75x0.375 | AISC 14**					
	16.00	RC1	0.01	≤ 1	100)	Negligible internal forces
	0.00	RC1	0.55	≤ 1	106)	Chapter F - Yielding - Bending about y-axis and/or z-axis acc. to F8 or F11
	0.00	RC1	0.00	≤ 1	131)	Chapter F - Local buckling of round HSS does not Apply - acc. to F8
	12.00	RC1	0.04	≤ 1	162)	Chapter G - Nominal shear strength in y-axis and/or z-axis - acc. to G6
	0.00	RC1	0.55	≤ 1	331)	Chapter H - Biaxial bending without axial forces - acc. to H1.1
21	**Cross-section No. 2 - Round HSS 12.75x0.375 | AISC 14**					
	14.00	RC1	0.01	≤ 1	100)	Negligible internal forces
	0.00	RC1	0.50	≤ 1	106)	Chapter F - Yielding - Bending about y-axis and/or z-axis acc. to F8 or F11
	0.00	RC1	0.00	≤ 1	131)	Chapter F - Local buckling of round HSS does not Apply - acc. to F8
	0.00	RC1	0.04	≤ 1	162)	Chapter G - Nominal shear strength in y-axis and/or z-axis - acc. to G6
	0.00	RC1	0.50	≤ 1	331)	Chapter H - Biaxial bending without axial forces - acc. to H1.1

The Sadler Group
+1 817 332 1074
4055 International Plaza, Suite 540 Fort Worth, Texas 76109

DESIGN RATIO

RF-STEEL AISC CA1
Ultimate Limit State
Serviceability Limit State

Isometric

Max
Design Ratio [-]

0.78

0.00

Max : 0.78
Min : 0.00

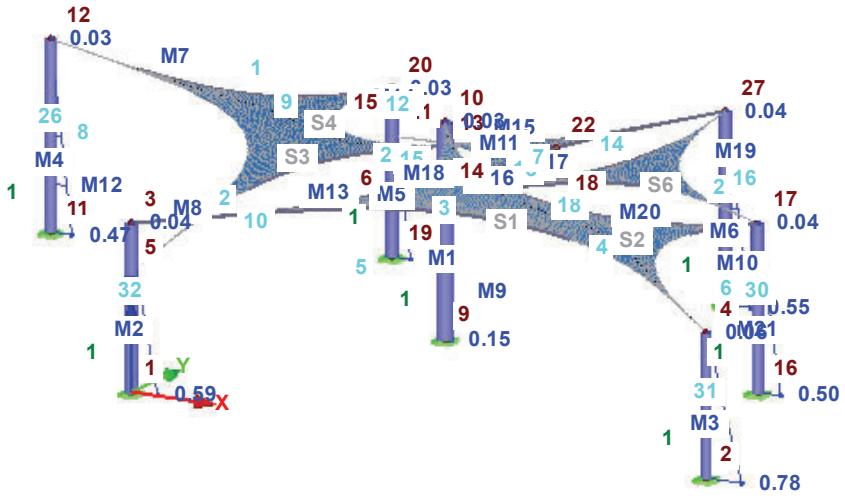

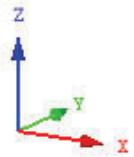

Members Max Design Ratio: 0.78

THE SADLER GROUP
4055 International Plaza, Suite 540
FORT WORTH TX
(817) 332-1074

Project Title:
Engineer:
Project ID:
Project Descr:

General Footing

Project File: Shelter Cove Park - 9888-1.ec6

LIC# : KW-06015008, Build:20.23.2.14 THE SADLER GROUP (c) ENERCALC INC 1983-2022

DESCRIPTION: SPREAD FOOTING C1

Code References

Calculations per ACI 318-14, IBC 2021, CBC 2019, ASCE 7-16
Load Combinations Used : IBC 2021

General Information

Material Properties

f'c : Concrete 28 day strength	=	3.0 ksi
fy : Rebar Yield	=	60.0 ksi
Ec : Concrete Elastic Modulus	=	3,122.0 ksi
Concrete Density	=	145.0 pcf
φ Values Flexure	=	0.90
Shear	=	0.750

Analysis Settings

Min Steel % Bending Reinf.	=	
Min Allow % Temp Reinf.	=	0.00090
Min. Overturning Safety Factor	=	1.0 : 1
Min. Sliding Safety Factor	=	1.0 : 1
Add Ftg Wt for Soil Pressure	:	Yes
Use ftg wt for stability, moments & shears	:	Yes
Add Pedestal Wt for Soil Pressure	:	No
Use Pedestal wt for stability, mom & shear	:	No

Soil Design Values

Allowable Soil Bearing	=	1.50 ksf
Soil Density	=	110.0 pcf
Increase Bearing By Footing Weight	=	Yes
Soil Passive Resistance (for Sliding)	=	250.0 pcf
Soil/Concrete Friction Coeff.	=	0.30

Increases based on footing Depth

Footing base depth below soil surface	=	4.0 ft
Allow press. increase per foot of depth	=	ksf
when footing base is below	=	ft

Increases based on footing plan dimension

Allowable pressure increase per foot of depth	=	ksf
when max. length or width is greater than	=	ft

Dimensions

Width parallel to X-X Axis	=	7.833 ft
Length parallel to Z-Z Axis	=	7.833 ft
Footing Thickness	=	42.0 in

Pedestal dimensions...

px : parallel to X-X Axis	=	in
pz : parallel to Z-Z Axis	=	in
Height	=	in

Rebar Centerline to Edge of Concrete...

at Bottom of footing	=	3.0 in

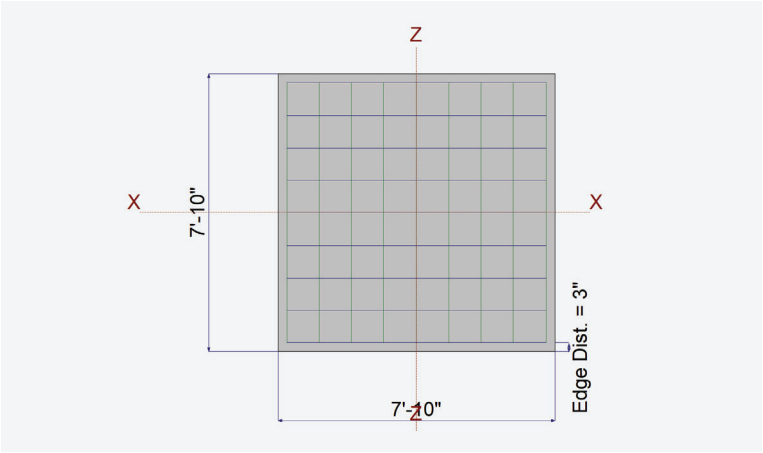

Reinforcing

Bars parallel to X-X Axis			
Number of Bars	=		9.0
Reinforcing Bar Size	=	#	6
Bars parallel to Z-Z Axis			
Number of Bars	=		9.0
Reinforcing Bar Size	=	#	6

Bandwidth Distribution Check (ACI 15.4.4.2)

Direction Requiring Closer Separation n/a
Bars required within zone n/a
Bars required on each side of zone n/a

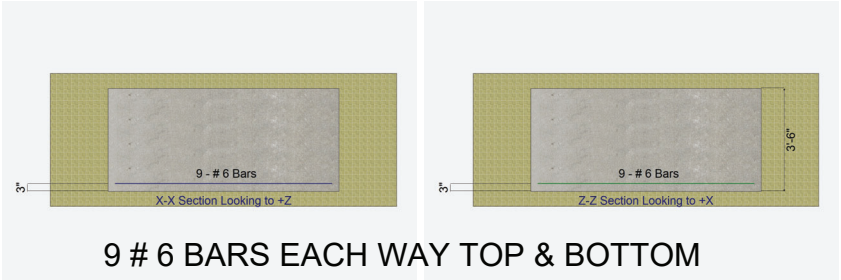

9 # 6 BARS EACH WAY TOP & BOTTOM

Applied Loads

		D	Lr	L	S	W	E	H	
P : Column Load	=	1.307							k
OB : Overburden	=								ksf
M-xx	=								k-ft
M-zz	=	50.699							k-ft
V-x	=	3.165							k
V-z	=								k

General Footing

Project File: Shelter Cove Park - 9888-1.ec6

LIC# : KW-06015008, Build:20.23.2.14 THE SADLER GROUP (c) ENERCALC INC 1983-2022

DESCRIPTION: SPREAD FOOTING C1

DESIGN SUMMARY

Design OK

	Min. Ratio	Item	Applied	Capacity	Governing Load Combination
PASS	0.6889	Soil Bearing	1.383 ksf	2.008 ksf	D Only about Z-Z axis
PASS	n/a	Overturning - X-X	0.0 k-ft	0.0 k-ft	No Overturning
PASS	2.271	Overturning - Z-Z	61.777 k-ft	140.288 k-ft	D Only
PASS	8.268	Sliding - X-X	3.165 k	26.167 k	D Only
PASS	n/a	Sliding - Z-Z	0.0 k	0.0 k	No Sliding
PASS	n/a	Uplift	0.0 k	0.0 k	No Uplift
PASS	0.06769	Z Flexure (+X)	5.929 k-ft/ft	87.597 k-ft/ft	+1.40D
PASS	0.05835	Z Flexure (-X)	5.111 k-ft/ft	87.597 k-ft/ft	+1.40D
PASS	0.002611	X Flexure (+Z)	0.2287 k-ft/ft	87.597 k-ft/ft	+1.40D
PASS	0.002611	X Flexure (-Z)	0.2287 k-ft/ft	87.597 k-ft/ft	+1.40D
PASS	0.01935	1-way Shear (+X)	1.590 psi	82.158 psi	+1.40D
PASS	0.01444	1-way Shear (-X)	1.186 psi	82.158 psi	+1.40D
PASS	0.000547	1-way Shear (+Z)	0.04492 psi	82.158 psi	+1.40D
PASS	0.000547	1-way Shear (-Z)	0.04492 psi	82.158 psi	+1.40D
PASS	0.001831	2-way Punching	0.3009 psi	164.317 psi	+1.40D

Detailed Results

Soil Bearing

Rotation Axis & Load Combination...	Gross Allowable	Xecc (in)	Zecc (in)	Actual Soil Bearing Stress @ Location Bottom, -Z	Top, +Z	Left, -X	Right, +X	Actual / Allow Ratio
X-X, D Only	2.008	n/a	0.0	0.5838	0.5838	n/a	n/a	0.291
X-X, +0.60D	2.008	n/a	0.0	0.3503	0.3503	n/a	n/a	0.175
Z-Z, D Only	2.008	20.696	n/a	n/a	n/a	0.0	1.383	0.689
Z-Z, +0.60D	2.008	20.696	n/a	n/a	n/a	0.0	0.8296	0.413

Overturning Stability

Rotation Axis & Load Combination...	Overturning Moment	Resisting Moment	Stability Ratio	Status
X-X, D Only	None	0.0 k-ft	Infinity	OK
X-X, +0.60D	None	0.0 k-ft	Infinity	OK
Z-Z, D Only	61.777 k-ft	140.288 k-ft	2.271	OK
Z-Z, +0.60D	37.066 k-ft	84.173 k-ft	2.271	OK

All units k

Sliding Stability

Force Application Axis Load Combination...	Sliding Force	Resisting Force	Stability Ratio	Status
X-X, D Only	3.165 k	26.167 k	8.268	OK
X-X, +0.60D	1.899 k	21.869 k	11.516	OK
Z-Z, D Only	0.0 k	26.167 k	No Sliding	OK
Z-Z, +0.60D	0.0 k	21.869 k	No Sliding	OK

THE SADLER GROUP
4055 International Plaza, Suite 540
FORT WORTH TX
(817) 332-1074

Project Title:
Engineer:
Project ID:
Project Descr:

General Footing

Project File: Shelter Cove Park - 9888-1.ec6

LIC# : KW-06015008, Build:20.23.2.14 THE SADLER GROUP (c) ENERCALC INC 1983-2022

DESCRIPTION: SPREAD FOOTING C2

Code References

Calculations per ACI 318-14, IBC 2021, CBC 2019, ASCE 7-16
Load Combinations Used : IBC 2021

General Information

Material Properties

f'c : Concrete 28 day strength	=	3.0 ksi
fy : Rebar Yield	=	60.0 ksi
Ec : Concrete Elastic Modulus	=	3,122.0 ksi
Concrete Density	=	145.0 pcf
φ Values Flexure	=	0.90
Shear	=	0.750

Analysis Settings

Min Steel % Bending Reinf.	=	
Min Allow % Temp Reinf.	=	0.00090
Min. Overturning Safety Factor	=	1.0 : 1
Min. Sliding Safety Factor	=	1.0 : 1
Add Ftg Wt for Soil Pressure	:	Yes
Use ftg wt for stability, moments & shears	:	Yes
Add Pedestal Wt for Soil Pressure	:	No
Use Pedestal wt for stability, mom & shear	:	No

Soil Design Values

Allowable Soil Bearing	=	1.50 ksf
Soil Density	=	110.0 pcf
Increase Bearing By Footing Weight	=	Yes
Soil Passive Resistance (for Sliding)	=	250.0 pcf
Soil/Concrete Friction Coeff.	=	0.30

Increases based on footing Depth

Footing base depth below soil surface	=	4.0 ft
Allow press. increase per foot of depth	=	ksf
when footing base is below	=	ft

Increases based on footing plan dimension

Allowable pressure increase per foot of depth	=	ksf
when max. length or width is greater than	=	ft

Dimensions

Width parallel to X-X Axis	=	8.333 ft
Length parallel to Z-Z Axis	=	8.333 ft
Footing Thickness	=	42.0 in

Pedestal dimensions...

px : parallel to X-X Axis	=	in
pz : parallel to Z-Z Axis	=	in
Height	=	in

Rebar Centerline to Edge of Concrete...

at Bottom of footing	=	3.0 in

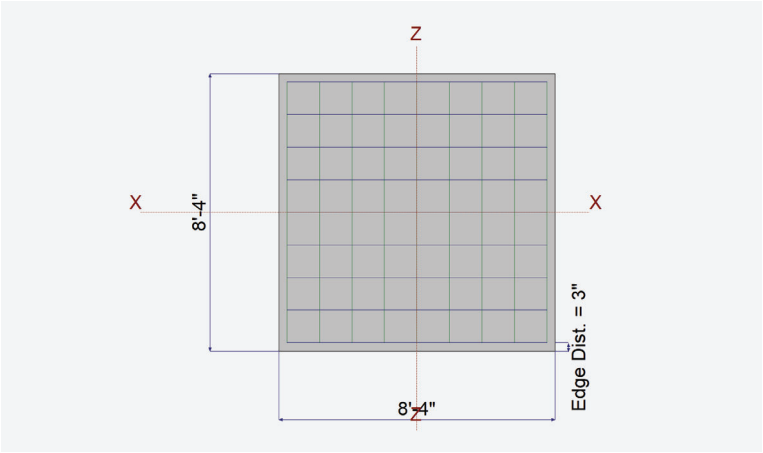

Reinforcing

Bars parallel to X-X Axis			
Number of Bars	=		9.0
Reinforcing Bar Size	=	#	6
Bars parallel to Z-Z Axis			
Number of Bars	=		9.0
Reinforcing Bar Size	=	#	6

Bandwidth Distribution Check (ACI 15.4.4.2)

Direction Requiring Closer Separation n/a
Bars required within zone n/a
Bars required on each side of zone n/a

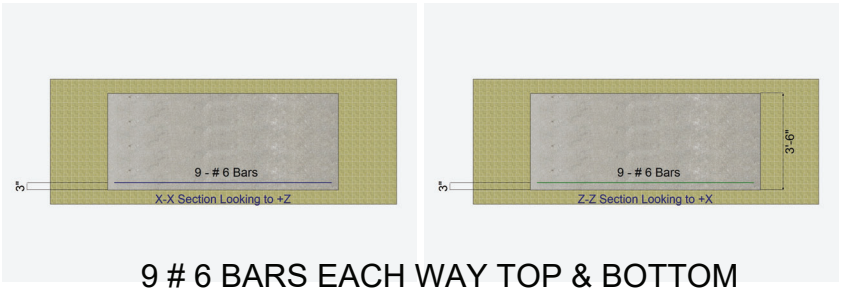

9 # 6 BARS EACH WAY TOP & BOTTOM

Applied Loads

		D	Lr	L	S	W	E	H	
P : Column Load	=	0.9340							k
OB : Overburden	=								ksf
M-xx	=								k-ft
M-zz	=	43.565							k-ft
V-x	=	3.409							k
V-z	=								k

General Footing

DESCRIPTION: SPREAD FOOTING C2

DESIGN SUMMARY

Design OK

	Min. Ratio	Item	Applied	Capacity	Governing Load Combination
PASS	0.5709	Soil Bearing	1.146 ksf	2.008 ksf	D Only about Z-Z axis
PASS	n/a	Overturning - X-X	0.0 k-ft	0.0 k-ft	No Overturning
PASS	3.003	Overturning - Z-Z	55.497 k-ft	166.632 k-ft	D Only
PASS	8.332	Sliding - X-X	3.409 k	28.404 k	D Only
PASS	n/a	Sliding - Z-Z	0.0 k	0.0 k	No Sliding
PASS	n/a	Uplift	0.0 k	0.0 k	No Uplift
PASS	0.05855	Z Flexure (+X)	4.825 k-ft/ft	82.405 k-ft/ft	+1.40D
PASS	0.05458	Z Flexure (-X)	4.498 k-ft/ft	82.405 k-ft/ft	+1.40D
PASS	0.001984	X Flexure (+Z)	0.1635 k-ft/ft	82.405 k-ft/ft	+1.40D
PASS	0.001984	X Flexure (-Z)	0.1635 k-ft/ft	82.405 k-ft/ft	+1.40D
PASS	0.01754	1-way Shear (+X)	1.441 psi	82.158 psi	+1.40D
PASS	0.01664	1-way Shear (-X)	1.367 psi	82.158 psi	+1.40D
PASS	0.000449	1-way Shear (+Z)	0.03688 psi	82.158 psi	+1.40D
PASS	0.000449	1-way Shear (-Z)	0.03688 psi	82.158 psi	+1.40D
PASS	0.001099	2-way Punching	0.1805 psi	164.317 psi	+1.40D

Detailed Results

Soil Bearing

Rotation Axis & Load Combination...	Gross Allowable	Xecc (in)	Zecc (in)	Actual Soil Bearing Stress @ Location Bottom, -Z	Top, +Z	Left, -X	Right, +X	Actual / Allow Ratio
X-X, D Only	2.008	n/a	0.0	0.5760	0.5760	n/a	n/a	0.287
X-X, +0.60D	2.008	n/a	0.0	0.3456	0.3456	n/a	n/a	0.172
Z-Z, D Only	2.008	16.652	n/a	n/a	n/a	0.006248	1.146	0.571
Z-Z, +0.60D	2.008	16.652	n/a	n/a	n/a	0.003749	0.6874	0.342

Overturning Stability

Rotation Axis & Load Combination...	Overturning Moment	Resisting Moment	Stability Ratio	Status
X-X, D Only	None	0.0 k-ft	Infinity	OK
X-X, +0.60D	None	0.0 k-ft	Infinity	OK
Z-Z, D Only	55.497 k-ft	166.632 k-ft	3.003	OK
Z-Z, +0.60D	33.298 k-ft	99.979 k-ft	3.003	OK

All units k

Sliding Stability

Force Application Axis Load Combination...	Sliding Force	Resisting Force	Stability Ratio	Status
X-X, D Only	3.409 k	28.404 k	8.332	OK
X-X, +0.60D	2.045 k	23.604 k	11.540	OK
Z-Z, D Only	0.0 k	28.404 k	No Sliding	OK
Z-Z, +0.60D	0.0 k	23.604 k	No Sliding	OK

THE SADLER GROUP
4055 International Plaza, Suite 540
FORT WORTH TX
(817) 332-1074

Project Title:
Engineer:
Project ID:
Project Descr:

General Footing

Project File: Shelter Cove Park - 9888-1.ec6

LIC# : KW-06015008, Build:20.23.2.14 THE SADLER GROUP (c) ENERCALC INC 1983-2022

DESCRIPTION: SPREAD FOOTING C3

Code References

Calculations per ACI 318-14, IBC 2021, CBC 2019, ASCE 7-16
Load Combinations Used : IBC 2021

General Information

Material Properties

f'c : Concrete 28 day strength	=	3.0 ksi
fy : Rebar Yield	=	60.0 ksi
Ec : Concrete Elastic Modulus	=	3,122.0 ksi
Concrete Density	=	145.0 pcf
φ Values Flexure	=	0.90
Shear	=	0.750

Analysis Settings

Min Steel % Bending Reinf.	=	
Min Allow % Temp Reinf.	=	0.00090
Min. Overturning Safety Factor	=	1.0 : 1
Min. Sliding Safety Factor	=	1.0 : 1
Add Ftg Wt for Soil Pressure	:	Yes
Use ftg wt for stability, moments & shears	:	Yes
Add Pedestal Wt for Soil Pressure	:	No
Use Pedestal wt for stability, mom & shear	:	No

Soil Design Values

Allowable Soil Bearing	=	1.50 ksf
Soil Density	=	110.0 pcf
Increase Bearing By Footing Weight	=	Yes
Soil Passive Resistance (for Sliding)	=	250.0 pcf
Soil/Concrete Friction Coeff.	=	0.30

Increases based on footing Depth

Footing base depth below soil surface	=	4.0 ft
Allow press. increase per foot of depth	=	ksf
when footing base is below	=	ft

Increases based on footing plan dimension

Allowable pressure increase per foot of depth	=	ksf
when max. length or width is greater than	=	ft

Dimensions

Width parallel to X-X Axis	=	7.666 ft
Length parallel to Z-Z Axis	=	7.666 ft
Footing Thickness	=	42.0 in

Pedestal dimensions...

px : parallel to X-X Axis	=	in
pz : parallel to Z-Z Axis	=	in
Height	=	in

Rebar Centerline to Edge of Concrete...

at Bottom of footing	=	3.0 in

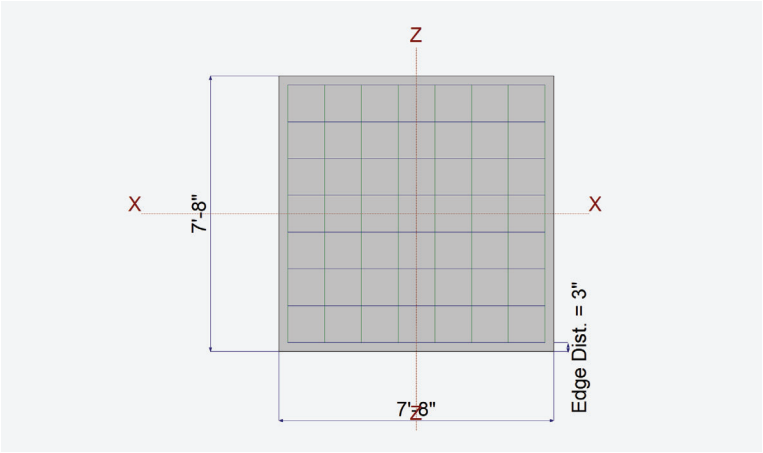

Reinforcing

Bars parallel to X-X Axis			
Number of Bars	=		8.0
Reinforcing Bar Size	=	#	6
Bars parallel to Z-Z Axis			
Number of Bars	=		8.0
Reinforcing Bar Size	=	#	6

Bandwidth Distribution Check (ACI 15.4.4.2)

Direction Requiring Closer Separation	n/a
# Bars required within zone	n/a
# Bars required on each side of zone	n/a

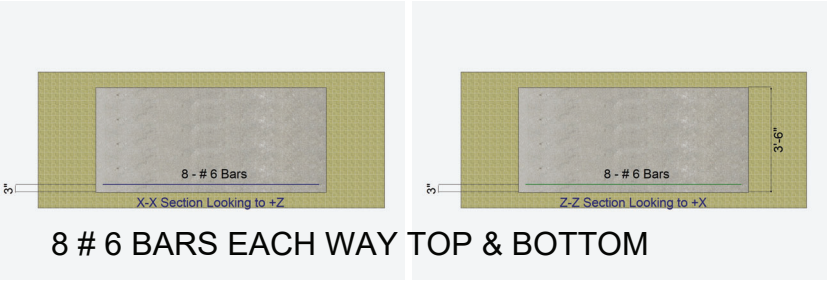

Applied Loads

		D	Lr	L	S	W	E	H	
P : Column Load	=	2.030							k
OB : Overburden	=								ksf
M-xx	=								k-ft
M-zz	=	54.086							k-ft
V-x	=	3.372							k
V-z	=								k

General Footing

Project File: Shelter Cove Park - 9888-1.ec6

LIC# : KW-06015008, Build:20.23.2.14 THE SADLER GROUP (c) ENERCALC INC 1983-2022

DESCRIPTION: SPREAD FOOTING C3

DESIGN SUMMARY

Design OK

	Min. Ratio	Item	Applied	Capacity	Governing Load Combination
PASS	0.7721	Soil Bearing	1.550 ksf	2.008 ksf	D Only about Z-Z axis
PASS	n/a	Overturning - X-X	0.0 k-ft	0.0 k-ft	No Overturning
PASS	2.041	Overturning - Z-Z	65.888 k-ft	134.488 k-ft	D Only
PASS	7.597	Sliding - X-X	3.372 k	25.618 k	D Only
PASS	n/a	Sliding - Z-Z	0.0 k	0.0 k	No Sliding
PASS	n/a	Uplift	0.0 k	0.0 k	No Uplift
PASS	0.08497	Z Flexure (+X)	6.768 k-ft/ft	79.654 k-ft/ft	+1.40D
PASS	0.06608	Z Flexure (-X)	5.264 k-ft/ft	79.654 k-ft/ft	+1.40D
PASS	0.004460	X Flexure (+Z)	0.3553 k-ft/ft	79.654 k-ft/ft	+1.40D
PASS	0.004460	X Flexure (-Z)	0.3553 k-ft/ft	79.654 k-ft/ft	+1.40D
PASS	0.02047	1-way Shear (+X)	1.682 psi	82.158 psi	+1.40D
PASS	0.01256	1-way Shear (-X)	1.032 psi	82.158 psi	+1.40D
PASS	0.000771	1-way Shear (+Z)	0.06337 psi	82.158 psi	+1.40D
PASS	0.000771	1-way Shear (-Z)	0.06337 psi	82.158 psi	+1.40D
PASS	0.003156	2-way Punching	0.5186 psi	164.317 psi	+1.40D

Detailed Results

Soil Bearing

Rotation Axis & Load Combination...	Gross Allowable	Xecc (in)	Zecc (in)	Actual Soil Bearing Stress @ Location Bottom, -Z	Top, +Z	Left, -X	Right, +X	Actual / Allow Ratio
X-X, D Only	2.008	n/a	0.0	0.5970	0.5970	n/a	n/a	0.297
X-X, +0.60D	2.008	n/a	0.0	0.3582	0.3582	n/a	n/a	0.178
Z-Z, D Only	2.008	22.534	n/a	n/a	n/a	0.0	1.550	0.772
Z-Z, +0.60D	2.008	22.534	n/a	n/a	n/a	0.0	0.9303	0.463

Overturning Stability

Rotation Axis & Load Combination...	Overturning Moment	Resisting Moment	Stability Ratio	Status
X-X, D Only	None	0.0 k-ft	Infinity	OK
X-X, +0.60D	None	0.0 k-ft	Infinity	OK
Z-Z, D Only	65.888 k-ft	134.488 k-ft	2.041	OK
Z-Z, +0.60D	39.533 k-ft	80.693 k-ft	2.041	OK

All units k

Sliding Stability

Force Application Axis Load Combination...	Sliding Force	Resisting Force	Stability Ratio	Status
X-X, D Only	3.372 k	25.618 k	7.597	OK
X-X, +0.60D	2.023 k	21.408 k	10.581	OK
Z-Z, D Only	0.0 k	25.618 k	No Sliding	OK
Z-Z, +0.60D	0.0 k	21.408 k	No Sliding	OK

THE SADLER GROUP
4055 International Plaza, Suite 540
FORT WORTH TX
(817) 332-1074

Project Title:
Engineer:
Project ID:
Project Descr:

General Footing

Project File: Shelter Cove Park - 9888-1.ec6

LIC# : KW-06015008, Build:20.23.2.14 THE SADLER GROUP (c) ENERCALC INC 1983-2022

DESCRIPTION: SPREAD FOOTING C4

Code References

Calculations per ACI 318-14, IBC 2021, CBC 2019, ASCE 7-16
Load Combinations Used : IBC 2021

General Information

Material Properties

f'c : Concrete 28 day strength	=	3.0 ksi
fy : Rebar Yield	=	60.0 ksi
Ec : Concrete Elastic Modulus	=	3,122.0 ksi
Concrete Density	=	145.0 pcf
φ Values Flexure	=	0.90
Shear	=	0.750

Analysis Settings

Min Steel % Bending Reinf.	=	
Min Allow % Temp Reinf.	=	0.00090
Min. Overturning Safety Factor	=	1.0 : 1
Min. Sliding Safety Factor	=	1.0 : 1
Add Ftg Wt for Soil Pressure	:	Yes
Use ftg wt for stability, moments & shears	:	Yes
Add Pedestal Wt for Soil Pressure	:	No
Use Pedestal wt for stability, mom & shear	:	No

Soil Design Values

Allowable Soil Bearing	=	1.50 ksf
Soil Density	=	110.0 pcf
Increase Bearing By Footing Weight	=	Yes
Soil Passive Resistance (for Sliding)	=	250.0 pcf
Soil/Concrete Friction Coeff.	=	0.30

Increases based on footing Depth

Footing base depth below soil surface	=	4.0 ft
Allow press. increase per foot of depth	=	ksf
when footing base is below	=	ft

Increases based on footing plan dimension

Allowable pressure increase per foot of depth	=	ksf
when max. length or width is greater than	=	ft

Dimensions

Width parallel to X-X Axis	=	8.333 ft
Length parallel to Z-Z Axis	=	8.333 ft
Footing Thickness	=	42.0 in

Pedestal dimensions...

px : parallel to X-X Axis	=	in
pz : parallel to Z-Z Axis	=	in
Height	=	in

Rebar Centerline to Edge of Concrete...

at Bottom of footing	=	3.0 in

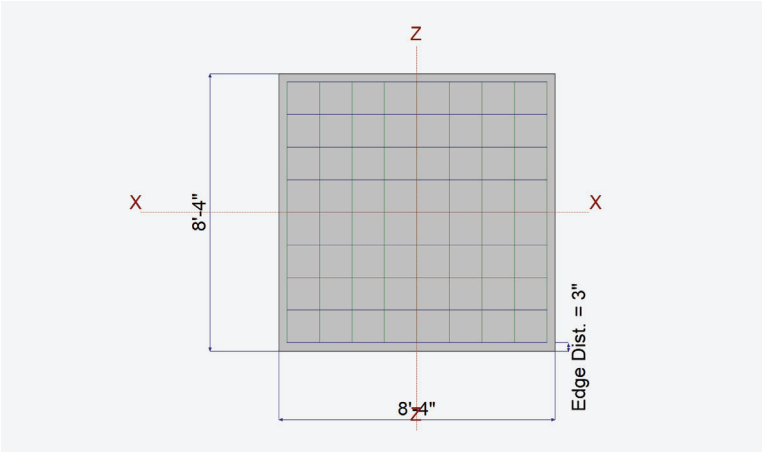

Reinforcing

Bars parallel to X-X Axis			
Number of Bars	=		9.0
Reinforcing Bar Size	=	#	6
Bars parallel to Z-Z Axis			
Number of Bars	=		9.0
Reinforcing Bar Size	=	#	6

Bandwidth Distribution Check (ACI 15.4.4.2)

Direction Requiring Closer Separation n/a
Bars required within zone n/a
Bars required on each side of zone n/a

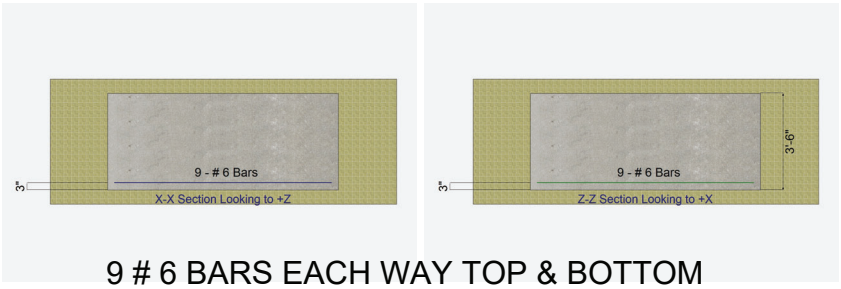

9 # 6 BARS EACH WAY TOP & BOTTOM

Applied Loads

		D	Lr	L	S	W	E	H	
P : Column Load	=	1.156							k
OB : Overburden	=								ksf
M-xx	=								k-ft
M-zz	=	53.281							k-ft
V-x	=	3.802							k
V-z	=								k

General Footing

DESCRIPTION: SPREAD FOOTING C4

DESIGN SUMMARY

Design OK

	Min. Ratio	Item	Applied	Capacity	Governing Load Combination
PASS	0.6346	Soil Bearing	1.274 ksf	2.008 ksf	D Only about Z-Z axis
PASS	n/a	Overturning - X-X	0.0 k-ft	0.0 k-ft	No Overturning
PASS	2.516	Overturning - Z-Z	66.588 k-ft	167.557 k-ft	D Only
PASS	7.488	Sliding - X-X	3.802 k	28.470 k	D Only
PASS	n/a	Sliding - Z-Z	0.0 k	0.0 k	No Sliding
PASS	n/a	Uplift	0.0 k	0.0 k	No Uplift
PASS	0.07117	Z Flexure (+X)	5.865 k-ft/ft	82.405 k-ft/ft	+1.40D
PASS	0.06458	Z Flexure (-X)	5.322 k-ft/ft	82.405 k-ft/ft	+1.40D
PASS	0.002455	X Flexure (+Z)	0.2023 k-ft/ft	82.405 k-ft/ft	+1.40D
PASS	0.002455	X Flexure (-Z)	0.2023 k-ft/ft	82.405 k-ft/ft	+1.40D
PASS	0.02139	1-way Shear (+X)	1.758 psi	82.158 psi	+1.40D
PASS	0.01874	1-way Shear (-X)	1.539 psi	82.158 psi	+1.40D
PASS	0.000556	1-way Shear (+Z)	0.04565 psi	82.158 psi	+1.40D
PASS	0.000556	1-way Shear (-Z)	0.04565 psi	82.158 psi	+1.40D
PASS	0.001461	2-way Punching	0.240 psi	164.317 psi	+1.40D

Detailed Results

Soil Bearing

Rotation Axis & Load Combination...	Gross Allowable	Xecc (in)	Zecc (in)	Actual Soil Bearing Stress @ Location Bottom, -Z	Top, +Z	Left, -X	Right, +X	Actual / Allow Ratio
X-X, D Only	2.008	n/a	0.0	0.5791	0.5791	n/a	n/a	0.289
X-X, +0.60D	2.008	n/a	0.0	0.3475	0.3475	n/a	n/a	0.173
Z-Z, D Only	2.008	19.869	n/a	n/a	n/a	0.0	1.274	0.635
Z-Z, +0.60D	2.008	19.869	n/a	n/a	n/a	0.0	0.7646	0.381

Overturning Stability

Rotation Axis & Load Combination...	Overturning Moment	Resisting Moment	Stability Ratio	Status
X-X, D Only	None	0.0 k-ft	Infinity	OK
X-X, +0.60D	None	0.0 k-ft	Infinity	OK
Z-Z, D Only	66.588 k-ft	167.557 k-ft	2.516	OK
Z-Z, +0.60D	39.953 k-ft	100.534 k-ft	2.516	OK

All units k

Sliding Stability

Force Application Axis Load Combination...	Sliding Force	Resisting Force	Stability Ratio	Status
X-X, D Only	3.802 k	28.470 k	7.488	OK
X-X, +0.60D	2.281 k	23.644 k	10.365	OK
Z-Z, D Only	0.0 k	28.470 k	No Sliding	OK
Z-Z, +0.60D	0.0 k	23.644 k	No Sliding	OK

THE SADLER GROUP
4055 International Plaza, Suite 540
FORT WORTH TX
(817) 332-1074

Project Title:
Engineer:
Project ID:
Project Descr:

General Footing

Project File: Shelter Cove Park - 9888-1.ec6

LIC# : KW-06015008, Build:20.23.2.14 THE SADLER GROUP (c) ENERCALC INC 1983-2022

DESCRIPTION: SPREAD FOOTING C5

Code References

Calculations per ACI 318-14, IBC 2021, CBC 2019, ASCE 7-16
Load Combinations Used : IBC 2021

General Information

Material Properties

f'c : Concrete 28 day strength	=	3.0 ksi
fy : Rebar Yield	=	60.0 ksi
Ec : Concrete Elastic Modulus	=	3,122.0 ksi
Concrete Density	=	145.0 pcf
φ Values Flexure	=	0.90
Shear	=	0.750

Analysis Settings

Min Steel % Bending Reinf.	=	
Min Allow % Temp Reinf.	=	0.00090
Min. Overturning Safety Factor	=	1.0 : 1
Min. Sliding Safety Factor	=	1.0 : 1
Add Ftg Wt for Soil Pressure	:	Yes
Use ftg wt for stability, moments & shears	:	Yes
Add Pedestal Wt for Soil Pressure	:	No
Use Pedestal wt for stability, mom & shear	:	No

Soil Design Values

Allowable Soil Bearing	=	1.50 ksf
Soil Density	=	110.0 pcf
Increase Bearing By Footing Weight	=	Yes
Soil Passive Resistance (for Sliding)	=	250.0 pcf
Soil/Concrete Friction Coeff.	=	0.30

Increases based on footing Depth

Footing base depth below soil surface	=	4.0 ft
Allow press. increase per foot of depth	=	ksf
when footing base is below	=	ft

Increases based on footing plan dimension

Allowable pressure increase per foot of depth	=	ksf
when max. length or width is greater than	=	ft

Dimensions

Width parallel to X-X Axis	=	7.50 ft
Length parallel to Z-Z Axis	=	7.50 ft
Footing Thickness	=	42.0 in

Pedestal dimensions...

px : parallel to X-X Axis	=	in
pz : parallel to Z-Z Axis	=	in
Height	=	in

Rebar Centerline to Edge of Concrete...

at Bottom of footing	=	3.0 in

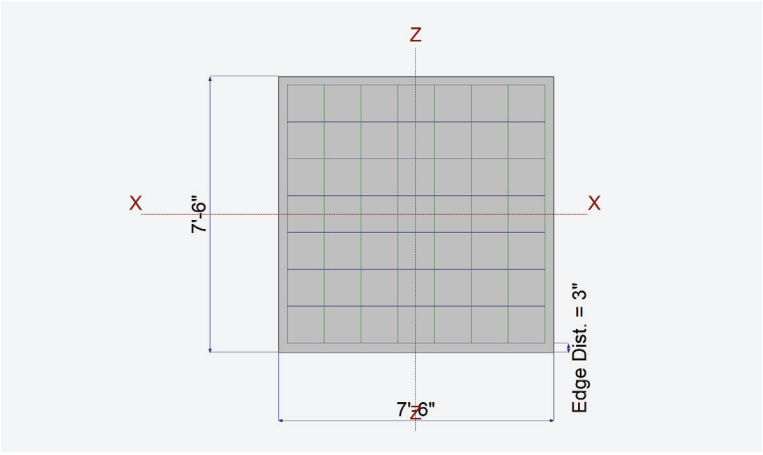

Reinforcing

Bars parallel to X-X Axis			
Number of Bars	=		8.0
Reinforcing Bar Size	=	#	6
Bars parallel to Z-Z Axis			
Number of Bars	=		8.0
Reinforcing Bar Size	=	#	6

Bandwidth Distribution Check (ACI 15.4.4.2)

Direction Requiring Closer Separation n/a
Bars required within zone n/a
Bars required on each side of zone n/a

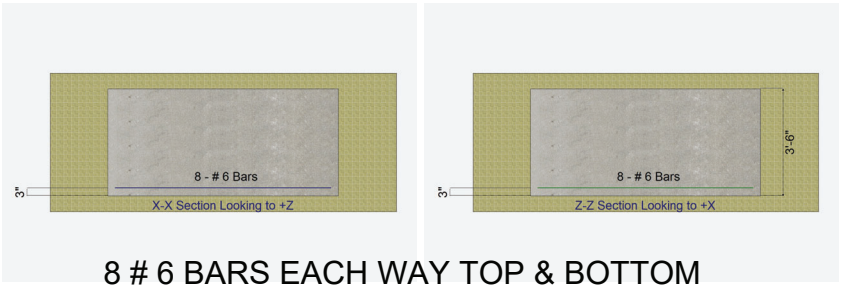

8 # 6 BARS EACH WAY TOP & BOTTOM

Applied Loads

		D	Lr	L	S	W	E	H	
P : Column Load	=	0.4470							k
OB : Overburden	=								ksf
M-xx	=								k-ft
M-zz	=	48.374							k-ft
V-x	=	4.031							k
V-z	=								k

THE SADLER GROUP
4055 International Plaza, Suite 540
FORT WORTH TX
(817) 332-1074

Project Title:
Engineer:
Project ID:
Project Descr:

General Footing

Project File: Shelter Cove Park - 9888-1.ec6

LIC# : KW-06015008, Build:20.23.2.14 THE SADLER GROUP (c) ENERCALC INC 1983-2022

DESCRIPTION: SPREAD FOOTING C5

DESIGN SUMMARY

Design OK

	Min. Ratio	Item	Applied	Capacity	Governing Load Combination
PASS	0.7826	Soil Bearing	1.571 ksf	2.008 ksf	D Only about Z-Z axis
PASS	n/a	Overturning - X-X	0.0 k-ft	0.0 k-ft	No Overturning
PASS	1.926	Overturning - Z-Z	62.483 k-ft	120.329 k-ft	D Only
PASS	6.051	Sliding - X-X	4.031 k	24.392 k	D Only
PASS	n/a	Sliding - Z-Z	0.0 k	0.0 k	No Sliding
PASS	n/a	Uplift	0.0 k	0.0 k	No Uplift
PASS	0.07908	Z Flexure (+X)	6.437 k-ft/ft	81.396 k-ft/ft	+1.40D
PASS	0.06420	Z Flexure (-X)	5.226 k-ft/ft	81.396 k-ft/ft	+1.40D
PASS	0.000961	X Flexure (+Z)	0.07823 k-ft/ft	81.396 k-ft/ft	+1.40D
PASS	0.000961	X Flexure (-Z)	0.07823 k-ft/ft	81.396 k-ft/ft	+1.40D
PASS	0.01802	1-way Shear (+X)	1.481 psi	82.158 psi	+1.40D
PASS	0.01075	1-way Shear (-X)	0.8834 psi	82.158 psi	+1.40D
PASS	0.000152	1-way Shear (+Z)	0.01248 psi	82.158 psi	+1.40D
PASS	0.000152	1-way Shear (-Z)	0.01248 psi	82.158 psi	+1.40D
PASS	0.001806	2-way Punching	0.2968 psi	164.317 psi	+1.40D

Detailed Results

Soil Bearing

Rotation Axis & Load Combination...	Gross Allowable	Xecc (in)	Zecc (in)	Actual Soil Bearing Stress @ Location Bottom, -Z	Top, +Z	Left, -X	Right, +X	Actual / Allow Ratio
X-X, D Only	2.008	n/a	0.0	0.5704	0.5704	n/a	n/a	0.284
X-X, +0.60D	2.008	n/a	0.0	0.3423	0.3423	n/a	n/a	0.171
Z-Z, D Only	2.008	23.367	n/a	n/a	n/a	0.0	1.571	0.783
Z-Z, +0.60D	2.008	23.367	n/a	n/a	n/a	0.0	0.9427	0.470

Overturning Stability

Rotation Axis & Load Combination...	Overturning Moment	Resisting Moment	Stability Ratio	Status
X-X, D Only	None	0.0 k-ft	Infinity	OK
X-X, +0.60D	None	0.0 k-ft	Infinity	OK
Z-Z, D Only	62.483 k-ft	120.329 k-ft	1.926	OK
Z-Z, +0.60D	37.490 k-ft	72.197 k-ft	1.926	OK

All units k

Sliding Stability

Force Application Axis Load Combination...	Sliding Force	Resisting Force	Stability Ratio	Status
X-X, D Only	4.031 k	24.392 k	6.051	OK
X-X, +0.60D	2.419 k	20.541 k	8.493	OK
Z-Z, D Only	0.0 k	24.392 k	No Sliding	OK
Z-Z, +0.60D	0.0 k	20.541 k	No Sliding	OK

THE SADLER GROUP
4055 International Plaza, Suite 540
FORT WORTH TX
(817) 332-1074

Project Title:
Engineer:
Project ID:
Project Descr:

General Footing

Project File: Shelter Cove Park - 9888-1.ec6

LIC# : KW-06015008, Build:20.23.2.14 THE SADLER GROUP (c) ENERCALC INC 1983-2022

DESCRIPTION: SPREAD FOOTING C6

Code References

Calculations per ACI 318-14, IBC 2021, CBC 2019, ASCE 7-16
Load Combinations Used : IBC 2021

General Information

Material Properties

f'c : Concrete 28 day strength	=	3.0	ksi
fy : Rebar Yield	=	60.0	ksi
Ec : Concrete Elastic Modulus	=	3,122.0	ksi
Concrete Density	=	145.0	pcf
φ Values Flexure	=	0.90	
Shear	=	0.750	

Analysis Settings

Min Steel % Bending Reinf.	=	
Min Allow % Temp Reinf.	=	0.00090
Min. Overturning Safety Factor	=	1.0 : 1
Min. Sliding Safety Factor	=	1.0 : 1
Add Ftg Wt for Soil Pressure	:	Yes
Use ftg wt for stability, moments & shears	:	Yes
Add Pedestal Wt for Soil Pressure	:	No
Use Pedestal wt for stability, mom & shear	:	No

Soil Design Values

Allowable Soil Bearing	=	1.50	ksf
Soil Density	=	110.0	pcf
Increase Bearing By Footing Weight	=	Yes	
Soil Passive Resistance (for Sliding)	=	250.0	pcf
Soil/Concrete Friction Coeff.	=	0.30	

Increases based on footing Depth

Footing base depth below soil surface	=	4.0	ft
Allow press. increase per foot of depth	=		ksf
when footing base is below	=		ft

Increases based on footing plan dimension

Allowable pressure increase per foot of depth	=		ksf
when max. length or width is greater than	=		ft

Dimensions

Width parallel to X-X Axis	=	9.166	ft
Length parallel to Z-Z Axis	=	9.166	ft
Footing Thickness	=	42.0	in

Pedestal dimensions...

px : parallel to X-X Axis	=		in
pz : parallel to Z-Z Axis	=		in
Height	=		in

Rebar Centerline to Edge of Concrete...

at Bottom of footing	=	3.0	in

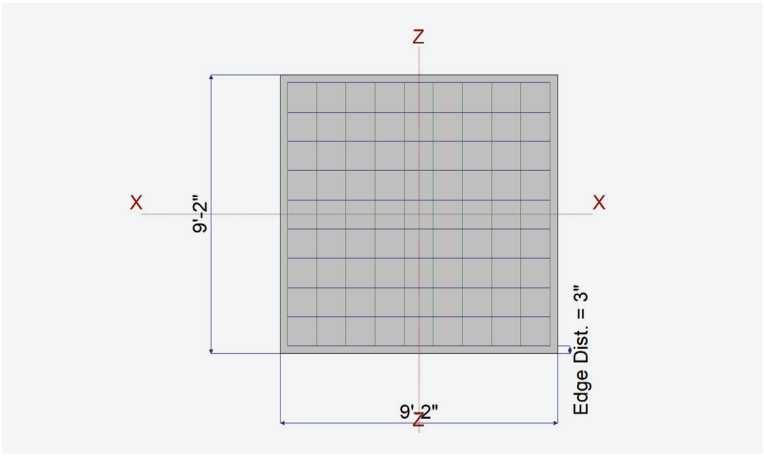

Reinforcing

Bars parallel to X-X Axis			
Number of Bars	=		10.0
Reinforcing Bar Size	=	#	6
Bars parallel to Z-Z Axis			
Number of Bars	=		10.0
Reinforcing Bar Size	=	#	6

Bandwidth Distribution Check (ACI 15.4.4.2)

Direction Requiring Closer Separation n/a

# Bars required within zone	n/a
# Bars required on each side of zone	n/a

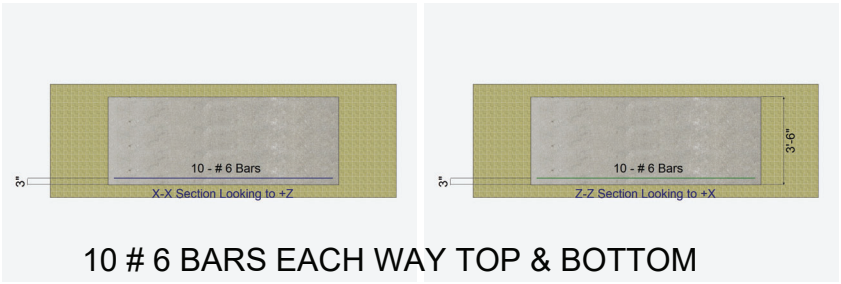

Applied Loads

		D	Lr	L	S	W	E	H	
P : Column Load	=	0.6930							k
OB : Overburden	=								ksf
M-xx	=								k-ft
M-zz	=	64.568							k-ft
V-x	=	5.50							k
V-z	=								k

General Footing

Project File: Shelter Cove Park - 9888-1.ec6

LIC# : KW-06015008, Build:20.23.2.14 THE SADLER GROUP (c) ENERCALC INC 1983-2022

DESCRIPTION: SPREAD FOOTING C6

DESIGN SUMMARY

Design OK

	Min. Ratio	Item	Applied	Capacity	Governing Load Combination
PASS	0.6097	Soil Bearing	1.224 ksf	2.008 ksf	D Only about Z-Z axis
PASS	n/a	Overturning - X-X	0.0 k-ft	0.0 k-ft	No Overturning
PASS	2.622	Overturning - Z-Z	83.818 k-ft	219.763 k-ft	D Only
PASS	5.897	Sliding - X-X	5.50 k	32.431 k	D Only
PASS	n/a	Sliding - Z-Z	0.0 k	0.0 k	No Sliding
PASS	n/a	Uplift	0.0 k	0.0 k	No Uplift
PASS	0.07891	Z Flexure (+X)	6.568 k-ft/ft	83.230 k-ft/ft	+1.40D
PASS	0.07490	Z Flexure (-X)	6.234 k-ft/ft	83.230 k-ft/ft	+1.40D
PASS	0.001457	X Flexure (+Z)	0.1213 k-ft/ft	83.230 k-ft/ft	+1.40D
PASS	0.001457	X Flexure (-Z)	0.1213 k-ft/ft	83.230 k-ft/ft	+1.40D
PASS	0.02845	1-way Shear (+X)	2.337 psi	82.158 psi	+1.40D
PASS	0.02682	1-way Shear (-X)	2.203 psi	82.158 psi	+1.40D
PASS	0.000413	1-way Shear (+Z)	0.03393 psi	82.158 psi	+1.40D
PASS	0.000413	1-way Shear (-Z)	0.03393 psi	82.158 psi	+1.40D
PASS	0.000897	2-way Punching	0.1474 psi	164.317 psi	+1.40D

Detailed Results

Soil Bearing

Rotation Axis & Load Combination...	Gross Allowable	Xecc (in)	Zecc (in)	Actual Soil Bearing Stress @ Location Bottom, -Z	Top, +Z	Left, -X	Right, +X	Actual / Allow Ratio
X-X, D Only	2.008	n/a	0.0	0.5707	0.5707	n/a	n/a	0.284
X-X, +0.60D	2.008	n/a	0.0	0.3424	0.3424	n/a	n/a	0.171
Z-Z, D Only	2.008	20.976	n/a	n/a	n/a	0.0	1.224	0.610
Z-Z, +0.60D	2.008	20.976	n/a	n/a	n/a	0.0	0.7341	0.366

Overturning Stability

Rotation Axis & Load Combination...	Overturning Moment	Resisting Moment	Stability Ratio	Status
X-X, D Only	None	0.0 k-ft	Infinity	OK
X-X, +0.60D	None	0.0 k-ft	Infinity	OK
Z-Z, D Only	83.818 k-ft	219.763 k-ft	2.622	OK
Z-Z, +0.60D	50.291 k-ft	131.858 k-ft	2.622	OK

All units k

Sliding Stability

Force Application Axis Load Combination...	Sliding Force	Resisting Force	Stability Ratio	Status
X-X, D Only	5.50 k	32.431 k	5.897	OK
X-X, +0.60D	3.30 k	26.677 k	8.084	OK
Z-Z, D Only	0.0 k	32.431 k	No Sliding	OK
Z-Z, +0.60D	0.0 k	26.677 k	No Sliding	OK

THE SADLER GROUP
4055 International Plaza, Suite 540
FORT WORTH TX
(817) 332-1074

Project Title:
Engineer:
Project ID:
Project Descr:

General Footing

Project File: Shelter Cove Park - 9888-1.ec6

LIC# : KW-06015008, Build:20.23.2.14 THE SADLER GROUP (c) ENERCALC INC 1983-2022

DESCRIPTION: SPREAD FOOTING C7

Code References

Calculations per ACI 318-14, IBC 2021, CBC 2019, ASCE 7-16
Load Combinations Used : IBC 2021

General Information

Material Properties

f'c : Concrete 28 day strength	=	3.0	ksi
fy : Rebar Yield	=	60.0	ksi
Ec : Concrete Elastic Modulus	=	3,122.0	ksi
Concrete Density	=	145.0	pcf
φ Values Flexure	=	0.90	
Shear	=	0.750	

Analysis Settings

Min Steel % Bending Reinf.	=	
Min Allow % Temp Reinf.	=	0.00090
Min. Overturning Safety Factor	=	1.0 : 1
Min. Sliding Safety Factor	=	1.0 : 1
Add Ftg Wt for Soil Pressure	:	Yes
Use ftg wt for stability, moments & shears	:	Yes
Add Pedestal Wt for Soil Pressure	:	No
Use Pedestal wt for stability, mom & shear	:	No

Soil Design Values

Allowable Soil Bearing	=	1.50	ksf
Soil Density	=	110.0	pcf
Increase Bearing By Footing Weight	=	Yes	
Soil Passive Resistance (for Sliding)	=	250.0	pcf
Soil/Concrete Friction Coeff.	=	0.30	

Increases based on footing Depth

Footing base depth below soil surface	=	4.0	ft
Allow press. increase per foot of depth	=		ksf
when footing base is below	=		ft

Increases based on footing plan dimension

Allowable pressure increase per foot of depth	=		ksf
when max. length or width is greater than	=		ft

Dimensions

Width parallel to X-X Axis	=	10.333	ft
Length parallel to Z-Z Axis	=	10.333	ft
Footing Thickness	=	42.0	in

Pedestal dimensions...

px : parallel to X-X Axis	=		in
pz : parallel to Z-Z Axis	=		in
Height	=		in

Rebar Centerline to Edge of Concrete...

at Bottom of footing	=	3.0	in

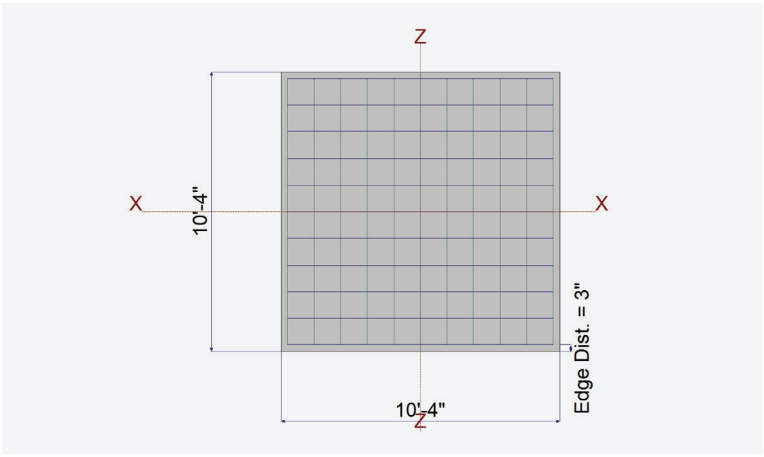

Reinforcing

Bars parallel to X-X Axis			
Number of Bars	=		11.0
Reinforcing Bar Size	=	#	6
Bars parallel to Z-Z Axis			
Number of Bars	=		11.0
Reinforcing Bar Size	=	#	6

Bandwidth Distribution Check (ACI 15.4.4.2)

Direction Requiring Closer Separation n/a

# Bars required within zone	n/a
# Bars required on each side of zone	n/a

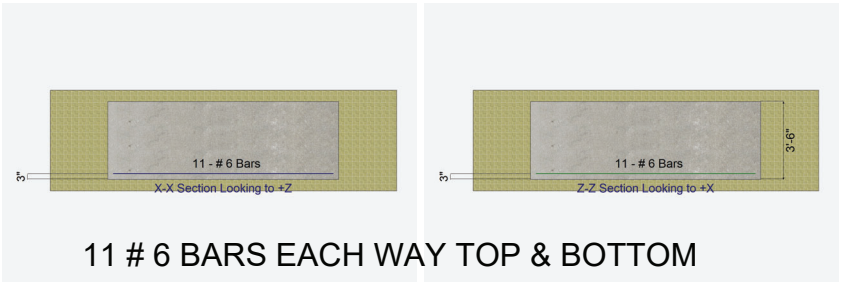

Applied Loads

		D	Lr	L	S	W	E	H	
P : Column Load	=	3.554							k
OB : Overburden	=								ksf
M-xx	=								k-ft
M-zz	=	29.655							k-ft
V-x	=	2.023							k
V-z	=								k

General Footing

DESCRIPTION: SPREAD FOOTING C7

DESIGN SUMMARY

Design OK

	Min. Ratio	Item	Applied	Capacity	Governing Load Combination
PASS	0.3953	Soil Bearing	0.7936 ksf	2.008 ksf	D Only about Z-Z axis
PASS	n/a	Overturning - X-X	0.0 k-ft	0.0 k-ft	No Overturning
PASS	8.947	Overturning - Z-Z	22.041 k-ft	197.193 k-ft	+0.60D
PASS	19.489	Sliding - X-X	2.023 k	39.427 k	D Only
PASS	n/a	Sliding - Z-Z	0.0 k	0.0 k	No Sliding
PASS	n/a	Uplift	0.0 k	0.0 k	No Uplift
PASS	0.03829	Z Flexure (+X)	3.110 k-ft/ft	81.237 k-ft/ft	+1.40D
PASS	0.02298	Z Flexure (-X)	1.866 k-ft/ft	81.237 k-ft/ft	+1.40D
PASS	0.007656	X Flexure (+Z)	0.6220 k-ft/ft	81.237 k-ft/ft	+1.40D
PASS	0.007656	X Flexure (-Z)	0.6220 k-ft/ft	81.237 k-ft/ft	+1.40D
PASS	0.01395	1-way Shear (+X)	1.146 psi	82.158 psi	+1.40D
PASS	0.009188	1-way Shear (-X)	0.7549 psi	82.158 psi	+1.40D
PASS	0.002379	1-way Shear (+Z)	0.1955 psi	82.158 psi	+1.40D
PASS	0.002379	1-way Shear (-Z)	0.1955 psi	82.158 psi	+1.40D
PASS	0.004467	2-way Punching	0.7341 psi	164.317 psi	+1.40D

Detailed Results

Soil Bearing

Rotation Axis & Load Combination...	Gross Allowable	Xecc (in)	Zecc (in)	Actual Soil Bearing Stress @ Location Bottom, -Z	Top, +Z	Left, -X	Right, +X	Actual / Allow Ratio
X-X, D Only	2.008	n/a	0.0	0.5958	0.5958	n/a	n/a	0.297
X-X, +0.60D	2.008	n/a	0.0	0.3575	0.3575	n/a	n/a	0.178
Z-Z, D Only	2.008	6.930	n/a	n/a	n/a	0.3980	0.7936	0.395
Z-Z, +0.60D	2.008	6.930	n/a	n/a	n/a	0.2388	0.4761	0.237

Overturning Stability

Rotation Axis & Load Combination...	Overturning Moment	Resisting Moment	Stability Ratio	Status
X-X, D Only	None	0.0 k-ft	Infinity	OK
X-X, +0.60D	None	0.0 k-ft	Infinity	OK
Z-Z, D Only	36.736 k-ft	328.655 k-ft	8.947	OK
Z-Z, +0.60D	22.041 k-ft	197.193 k-ft	8.947	OK

Sliding Stability

All units k

Force Application Axis Load Combination...	Sliding Force	Resisting Force	Stability Ratio	Status
X-X, D Only	2.023 k	39.427 k	19.489	OK
X-X, +0.60D	1.214 k	31.793 k	26.193	OK
Z-Z, D Only	0.0 k	39.427 k	No Sliding	OK
Z-Z, +0.60D	0.0 k	31.793 k	No Sliding	OK

THE SADLER GROUP
4055 International Plaza, Suite 540
FORT WORTH TX
(817) 332-1074

Project Title:
Engineer:
Project ID:
Project Descr:

Steel Base Plate by FEM

Project File: Shelter Cove Park - 9888-1.ec6

LIC# : KW-06015008, Build:20.23.2.14 THE SADLER GROUP (c) ENERCALC INC 1983-2022

DESCRIPTION: BASEPLATE C1/C2/C3/C4

Code References

Calculations per AISC Design Guide # 1, IBC 2021, CBC 2019, ASCE 7-16, AISC 360-16
Load Combination Set : IBC 2021

General Information

Material Properties

AISC Design Method	Allowable Strength Design				
Steel Plate Fy	=	36 ksi			
Concrete Support f'c	=	3 ksi	Ω c : ASD Safety Factor		2.310
			Nominal Bearing Fp per J8		2.550 ksi

Column, Plate & Pedestal

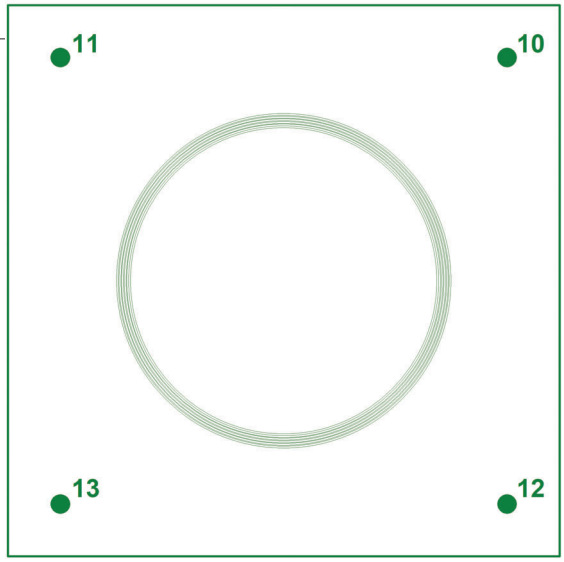

Column Properties

Steel Section	HSS 12.750x0.375		
Depth	12.75 in	Area	13.6 in^2
Width	12.75 in	Ixx	262 in^4
Flange Thickness	0.349 in	Iyy	262 in^4
Web Thicknes	in		

Column Rotation & Offset

Column Rotation	0 deg
Offset from "X" Plate Center	in
Offset from "Z" Plate Center	in

Plate Dimensions

N : Length	21.0 in
B : Width	21.0 in
Thickness	1.50 in

Column fully welded to base plate.

Support Dimensions

Width along "X"	21.0 in
Length along "Z'	21.0 in

Applied Loads

	P-Y	V-X	V-Z	M-X	M-Z
D : Dead Load	2.030 k	3.372 k	k	54.086 k-ft	k-ft
L : Live	k	k	k	k-ft	k-ft
Lr : Roof Live	k	k	k	k-ft	k-ft
S : Snow	k	k	k	k-ft	k-ft
W : Wind	k	k	k	k-ft	k-ft
E : Earthquake	k	k	k	k-ft	k-ft
H : Lateral Earth	k	k	k	k-ft	k-ft

" P " = Gravity load, "+" sign is downward "+" Moments create higher soil pressure at +Z ed
"+" Shears push plate towards +Z edge

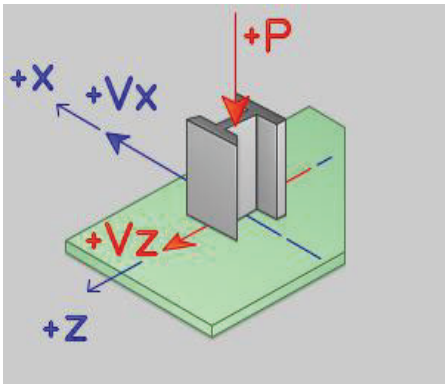

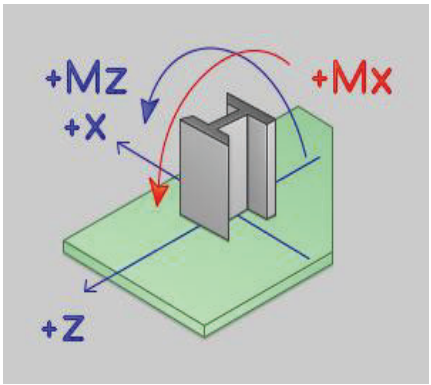

THE SADLER GROUP
4055 International Plaza, Suite 540
FORT WORTH TX
(817) 332-1074

Project Title:
Engineer:
Project ID:
Project Descr:

Steel Base Plate by FEM

Project File: Shelter Cove Park - 9888-1.ec6

LIC# : KW-06015008, Build:20.23.2.14 THE SADLER GROUP (c) ENERCALC INC 1983-2022

DESCRIPTION: BASEPLATE C1/C2/C3/C4

Anchors

Anchor Diameter	1 in		Tension Cap. in Concrete	28.275 k	Phi:	0.70
Anchor Length	36.0 in		Steel Strength in Tension	60.0 ksi	Phi:	0.75
			Shear Cap. in Concrete	16.965 k	Phi:	0.70
				ksi	Phi:	0.65

Anchor Bolt Placements

Number of Anchors 2

X,Z Datum @ Center of Plate			Add Anchor Symmetric about					Add Anchor Symmetric about	
	X	Z	X	Z		X	Z	X	Z
# 1	8.50	8.50 in	☒	☐	# 2	8.50	-8.50 in	☒	☐

Governing Conditions

Design Method
Governing Stress Ratio **0.931**
Design Plate Size

Bending Stress Ratio **0.473**

fb : Max. Bending Stress 0.00 ksi Location from Plate Center:
Fb : Allowable 0.00 ksi X: -4.149 in Z: -5.110 in

Plate Bearing Stress Ratio **0.866**

fu : Max. Bearing Stress 0.00 ksi Location from Plate Center:
Fp : Allowable 0.00 ksi X: -0.233 in Z: -10.319 in

Bolt Tension Stress Ratio **0.931**

D Only
Maximum Bolt Tension 0.00 k Location from Plate Center:
Allowable Tension/Pullout k X: 8.500 in Z: -8.500 in

THE SADLER GROUP
4055 International Plaza, Suite 540
FORT WORTH TX
(817) 332-1074

Project Title:
Engineer:
Project ID:
Project Descr:

Steel Base Plate by FEM

LIC# : KW-06015008, Build:20.23.2.14 THE SADLER GROUP (c) ENERCALC INC 1983-2022

DESCRIPTION: BASEPLATE C1/C2/C3/C4

Generated Mesh

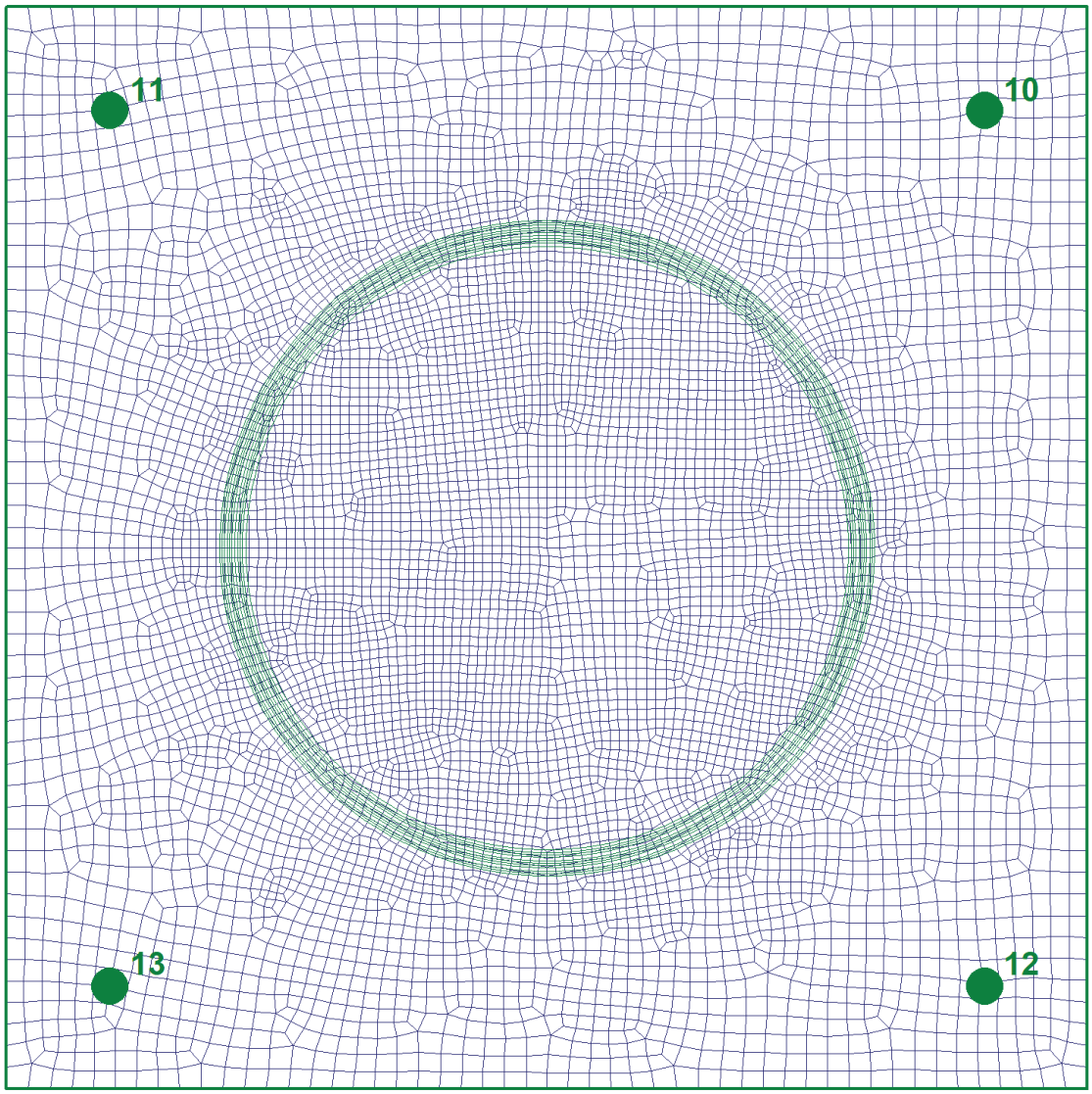

Steel Base Plate by FEM

DESCRIPTION: BASEPLATE C1/C2/C3/C4

Maximum Bending Stress from all Load Combinations

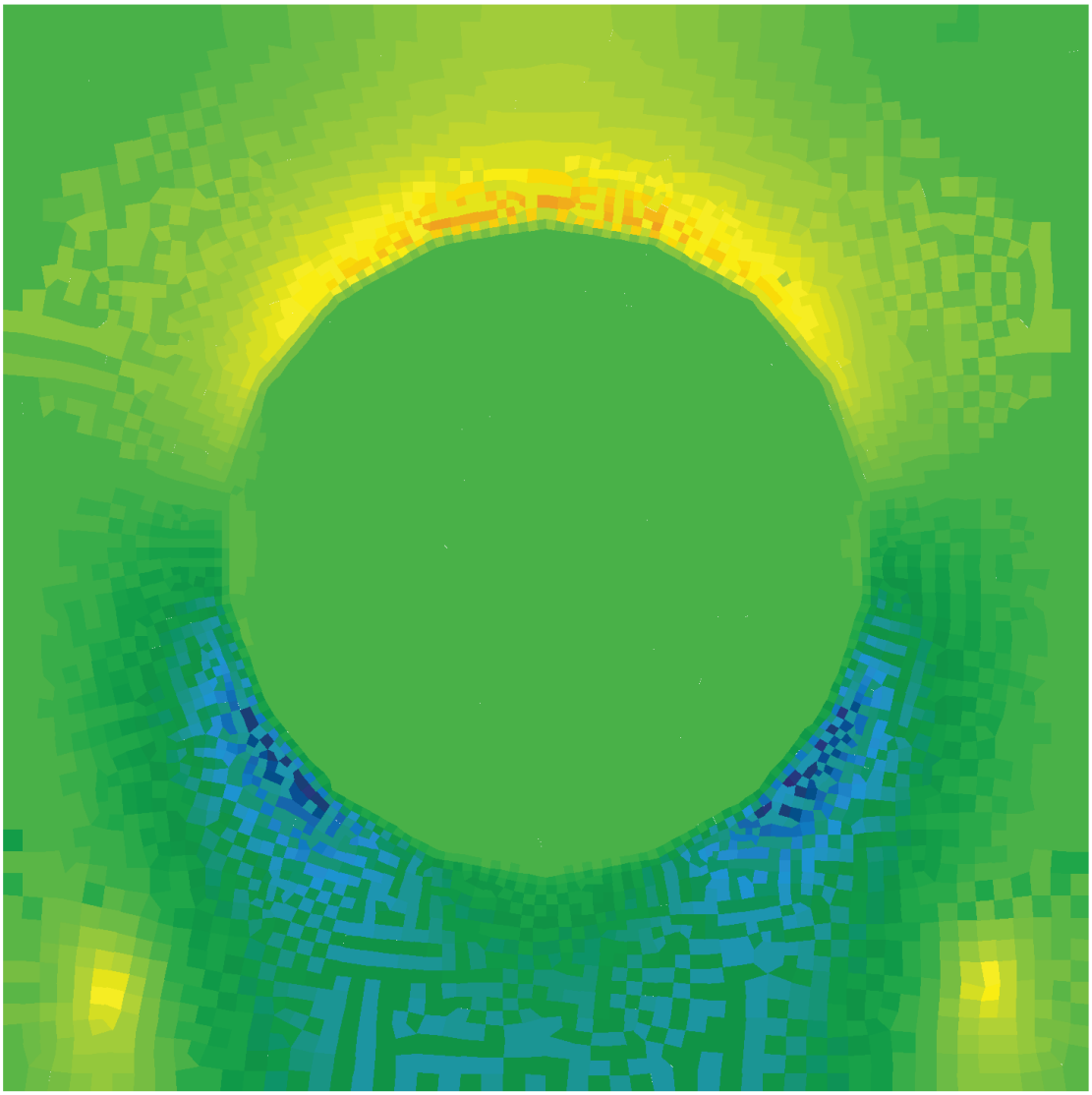

THE SADLER GROUP
4055 International Plaza, Suite 540
FORT WORTH TX
(817) 332-1074

Project Title:
Engineer:
Project ID:
Project Descr:

Steel Base Plate by FEM

Project File: Shelter Cove Park - 9888-1.ec6

LIC# : KW-06015008, Build:20.23.2.14 THE SADLER GROUP (c) ENERCALC INC 1983-2022

DESCRIPTION: BASEPLATE C5

Code References

Calculations per AISC Design Guide # 1, IBC 2021, CBC 2019, ASCE 7-16, AISC 360-16
Load Combination Set : IBC 2021

General Information

Material Properties

AISC Design Method	Allowable Strength Design				
Steel Plate Fy	=	36 ksi			
Concrete Support f'c	=	3 ksi	Ω c : ASD Safety Factor		2.310
			Nominal Bearing Fp per J8		2.550 ksi

Column, Plate & Pedestal

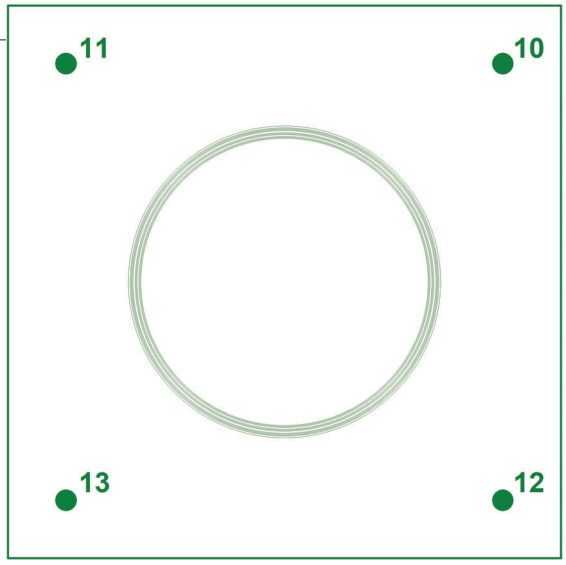

Column Properties

Steel Section	HSS 10.750x0.375		
Depth	10.75 in	Area	11.4 in^2
Width	10.75 in	Ixx	154 in^4
Flange Thickness	0.349 in	Iyy	154 in^4
Web Thicknes	in		

Column Rotation & Offset

Column Rotation	0 deg
Offset from "X" Plate Center	in
Offset from "Z" Plate Center	in

Plate Dimensions

N : Length	19.0 in	Width along "X"	19.0 in
B : Width	19.0 in	Length along "Z'	19.0 in
Thickness	1.50 in		

Column fully welded to base plate.

Applied Loads

	P-Y	V-X	V-Z	M-X	M-Z
D : Dead Load	0.4470 k	4.031 k	k	48.374 k-ft	k-ft
L : Live	k	k	k	k-ft	k-ft
Lr : Roof Live	k	k	k	k-ft	k-ft
S : Snow	k	k	k	k-ft	k-ft
W : Wind	k	k	k	k-ft	k-ft
E : Earthquake	k	k	k	k-ft	k-ft
H : Lateral Earth	k	k	k	k-ft	k-ft

" P " = Gravity load, "+" sign is downward "+" Moments create higher soil pressure at +Z ed
"+" Shears push plate towards +Z edge

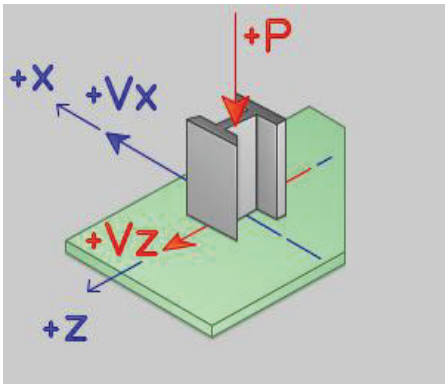

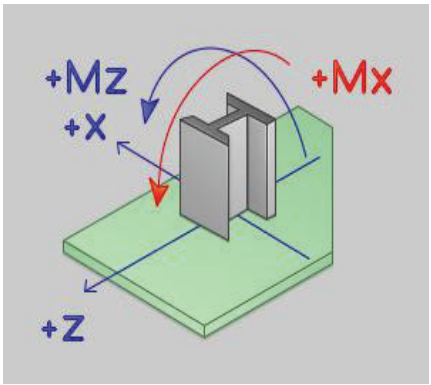

THE SADLER GROUP
4055 International Plaza, Suite 540
FORT WORTH TX
(817) 332-1074

Project Title:
Engineer:
Project ID:
Project Descr:

Steel Base Plate by FEM

Project File: Shelter Cove Park - 9888-1.ec6

LIC# : KW-06015008, Build:20.23.2.14 THE SADLER GROUP (c) ENERCALC INC 1983-2022

DESCRIPTION: BASEPLATE C5

Anchors

Anchor Diameter	1	in	Tension Cap. in Concrete	28.275	k	Phi:	0.70
Anchor Length	36.0	in	Steel Strength in Tension	60.0	ksi	Phi:	0.75
			Shear Cap. in Concrete	16.965	k	Phi:	0.70
					ksi	Phi:	0.65

Anchor Bolt Placements

Number of Anchors 2

X,Z Datum @ Center of Plate	X	Z		Add Anchor Symmetric about X	Add Anchor Symmetric about Z
# 1	7.50	7.50 in	# 2	7.50	-7.50 in	☒	☐
# 2	7.50	-7.50 in		☒	☐

Governing Conditions

Design Method
Governing Stress Ratio **0.960**
Design Plate Size

Bending Stress Ratio **0.505**

fb : Max. Bending Stress 0.00 ksi Location from Plate Center:
Fb : Allowable 0.00 ksi X: -1.621 in Z: 5.330 in

Plate Bearing Stress Ratio **0.939**

fu : Max. Bearing Stress 0.00 ksi Location from Plate Center:
Fp : Allowable 0.00 ksi X: -0.599 in Z: -9.340 in

Bolt Tension Stress Ratio **0.960**

D Only
Maximum Bolt Tension 0.00 k Location from Plate Center:
Allowable Tension/Pullout k X: -7.500 in Z: -7.500 in

THE SADLER GROUP
4055 International Plaza, Suite 540
FORT WORTH TX
(817) 332-1074

Project Title:
Engineer:
Project ID:
Project Descr:

Steel Base Plate by FEM

LIC# : KW-06015008, Build:20.23.2.14 THE SADLER GROUP (c) ENERCALC INC 1983-2022

DESCRIPTION: BASEPLATE C5

Generated Mesh

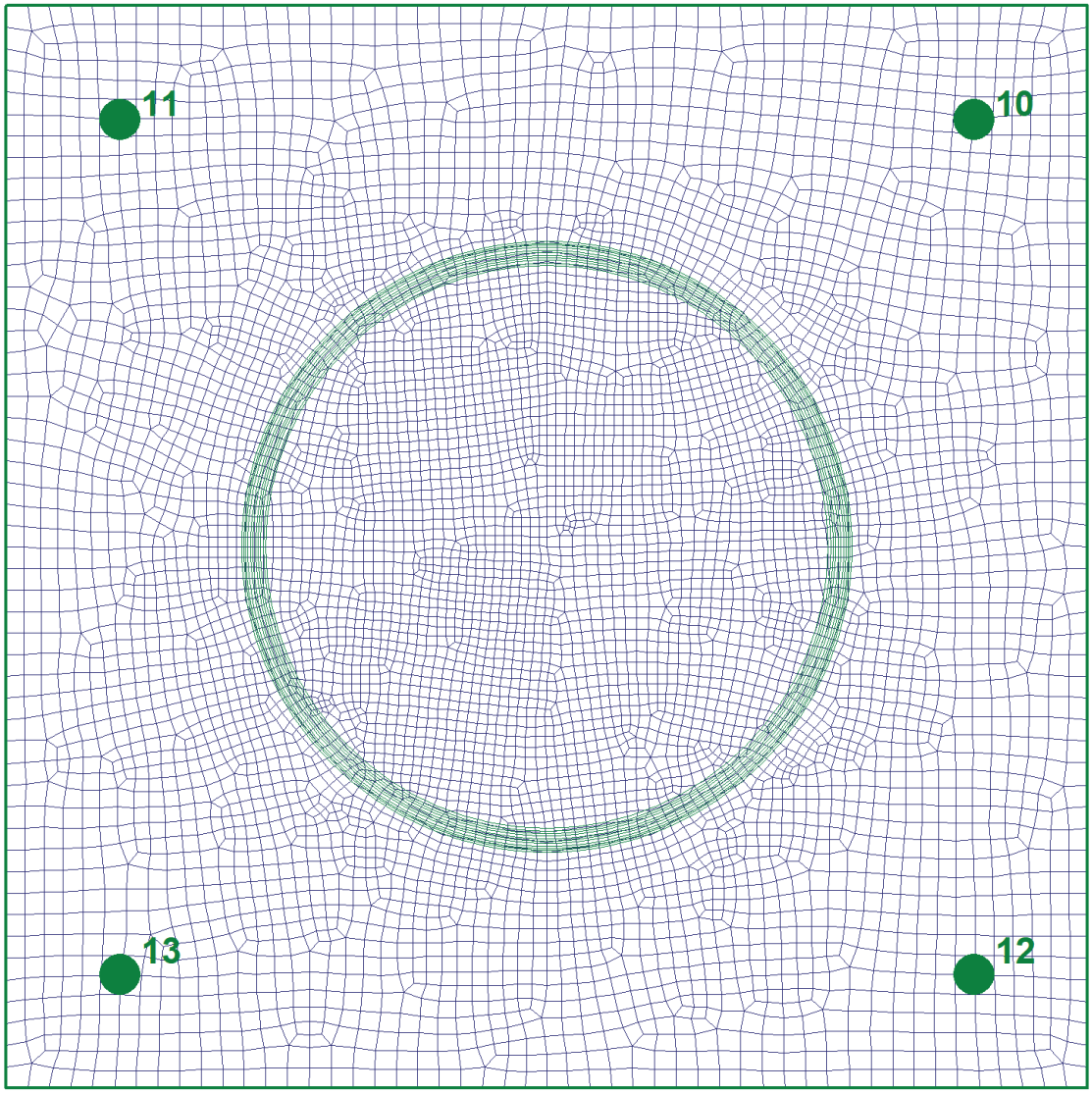

Steel Base Plate by FEM

DESCRIPTION: BASEPLATE C5

Maximum Bending Stress from all Load Combinations

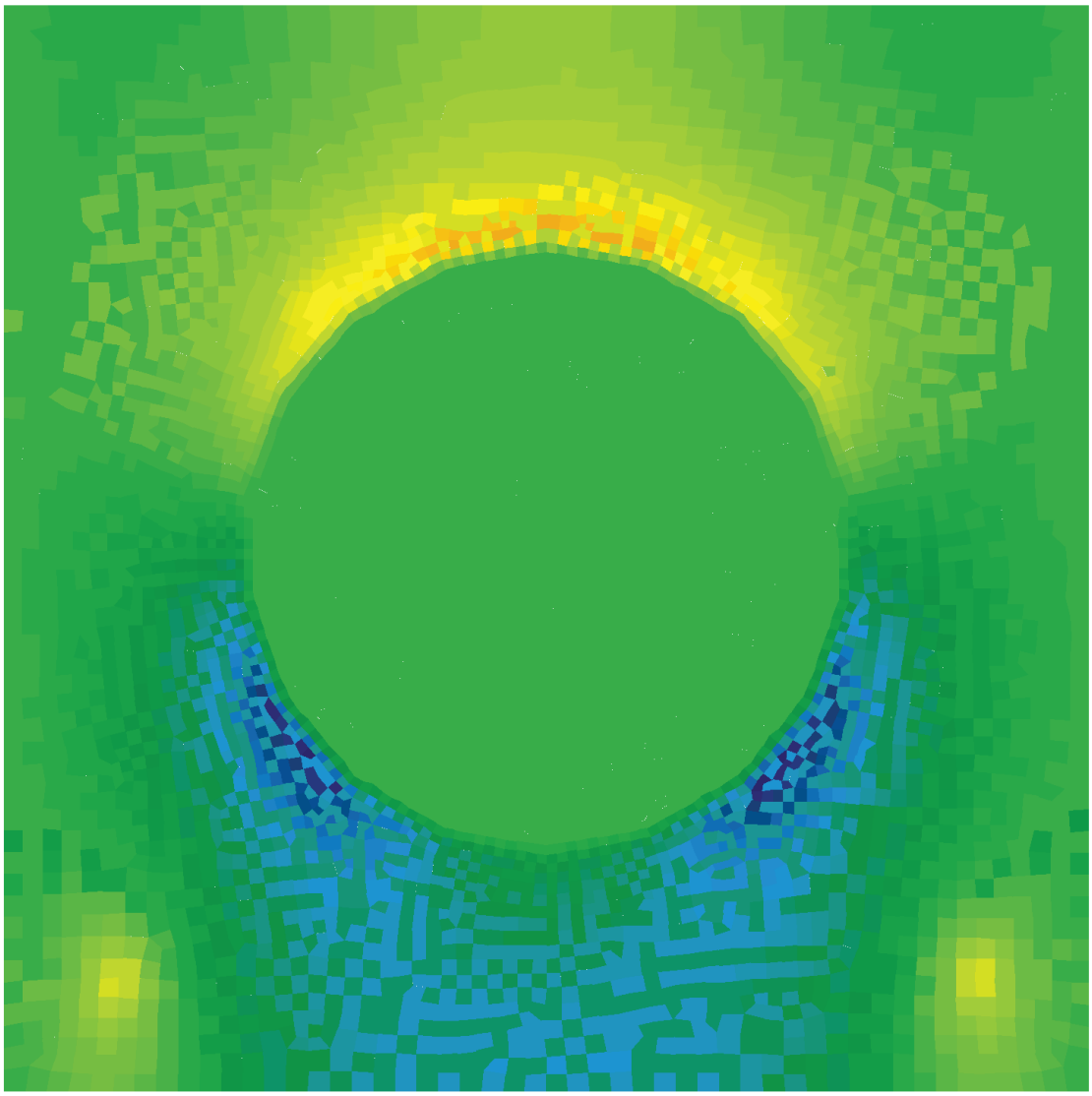

THE SADLER GROUP
4055 International Plaza, Suite 540
FORT WORTH TX
(817) 332-1074

Project Title:
Engineer:
Project ID:
Project Descr:

Steel Base Plate by FEM

Project File: Shelter Cove Park - 9888-1.ec6

LIC# : KW-06015008, Build:20.23.2.14 THE SADLER GROUP (c) ENERCALC INC 1983-2022

DESCRIPTION: BASEPLATE C6

Code References

Calculations per AISC Design Guide # 1, IBC 2021, CBC 2019, ASCE 7-16, AISC 360-16
Load Combination Set : IBC 2021

General Information

Material Properties

AISC Design Method	Allowable Strength Design				
Steel Plate Fy	=	36 ksi			
Concrete Support f'c	=	3 ksi	Ω c : ASD Safety Factor		2.310
			Nominal Bearing Fp per J8		2.550 ksi

Column, Plate & Pedestal

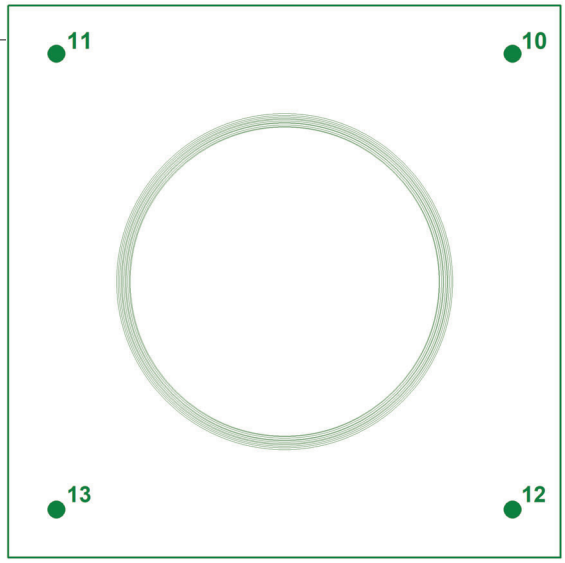

Column Properties

Steel Section	HSS 14x0.375		
Depth	14 in	Area	15 in^2
Width	14 in	Ixx	349 in^4
Flange Thickness	0.349 in	Iyy	349 in^4
Web Thicknes	in		

Column Rotation & Offset

Column Rotation	0 deg
Offset from "X" Plate Center	in
Offset from "Z" Plate Center	in

Plate Dimensions

N : Length	23.0 in
B : Width	23.0 in
Thickness	1.50 in

Column fully welded to base plate.

Support Dimensions

Width along "X"	23.0 in
Length along "Z'	23.0 in

Applied Loads

	P-Y	V-X	V-Z	M-X	M-Z
D : Dead Load	0.6930 k	5.50 k	k	64.568 k-ft	k-ft
L : Live	k	k	k	k-ft	k-ft
Lr : Roof Live	k	k	k	k-ft	k-ft
S : Snow	k	k	k	k-ft	k-ft
W : Wind	k	k	k	k-ft	k-ft
E : Earthquake	k	k	k	k-ft	k-ft
H : Lateral Earth	k	k	k	k-ft	k-ft

" P " = Gravity load, "+" sign is downward "+" Moments create higher soil pressure at +Z ed
"+" Shears push plate towards +Z edge

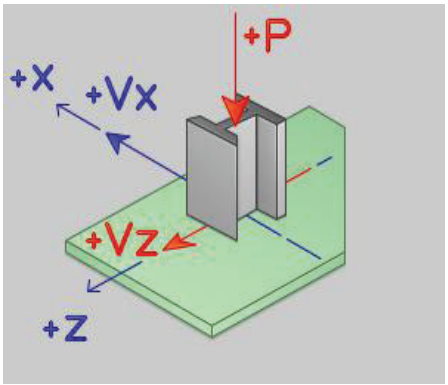

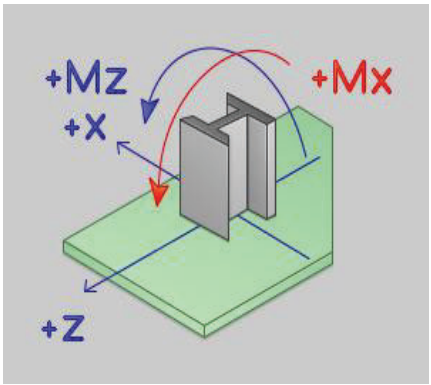

THE SADLER GROUP
4055 International Plaza, Suite 540
FORT WORTH TX
(817) 332-1074

Project Title:
Engineer:
Project ID:
Project Descr:

Steel Base Plate by FEM

Project File: Shelter Cove Park - 9888-1.ec6

LIC# : KW-06015008, Build:20.23.2.14 THE SADLER GROUP (c) ENERCALC INC 1983-2022

DESCRIPTION: BASEPLATE C6

Anchors

Anchor Diameter	1.25 in		Tension Cap. in Concrete	44.160 k	Phi:	0.70
Anchor Length	36.0 in		Steel Strength in Tension	60.0 ksi	Phi:	0.75
			Shear Cap. in Concrete	26.496 k	Phi:	0.70
				ksi	Phi:	0.65

Anchor Bolt Placements

Number of Anchors 2

X,Z Datum @ Center of Plate	X	Z	Add Anchor Symmetric about X	Add Anchor Symmetric about Z		X	Z	Add Anchor Symmetric about X	Add Anchor Symmetric about Z
# 1	9.50	9.50 in	☒	☐	# 2	9.50	-9.50 in	☒	☐

Governing Conditions

Design Method
Governing Stress Ratio **0.770**
Design Plate Size

Bending Stress Ratio **0.552**

fb : Max. Bending Stress	0.00 ksi	Location from Plate Center:	
Fb : Allowable	0.00 ksi	X: -4.552 in	Z: -5.615 in

Plate Bearing Stress Ratio **0.770**

fu : Max. Bearing Stress	0.00 ksi	Location from Plate Center:	
Fp : Allowable	0.00 ksi	X: -0.270 in	Z: -11.285 in

Bolt Tension Stress Ratio **0.651**

D Only

Maximum Bolt Tension	20.14 k	Location from Plate Center:	
Allowable Tension/Pullout	k	X: 9.500 in	Z: -9.500 in

THE SADLER GROUP
4055 International Plaza, Suite 540
FORT WORTH TX
(817) 332-1074

Project Title:
Engineer:
Project ID:
Project Descr:

Steel Base Plate by FEM

LIC# : KW-06015008, Build:20.23.2.14 THE SADLER GROUP (c) ENERCALC INC 1983-2022

DESCRIPTION: BASEPLATE C6

Generated Mesh

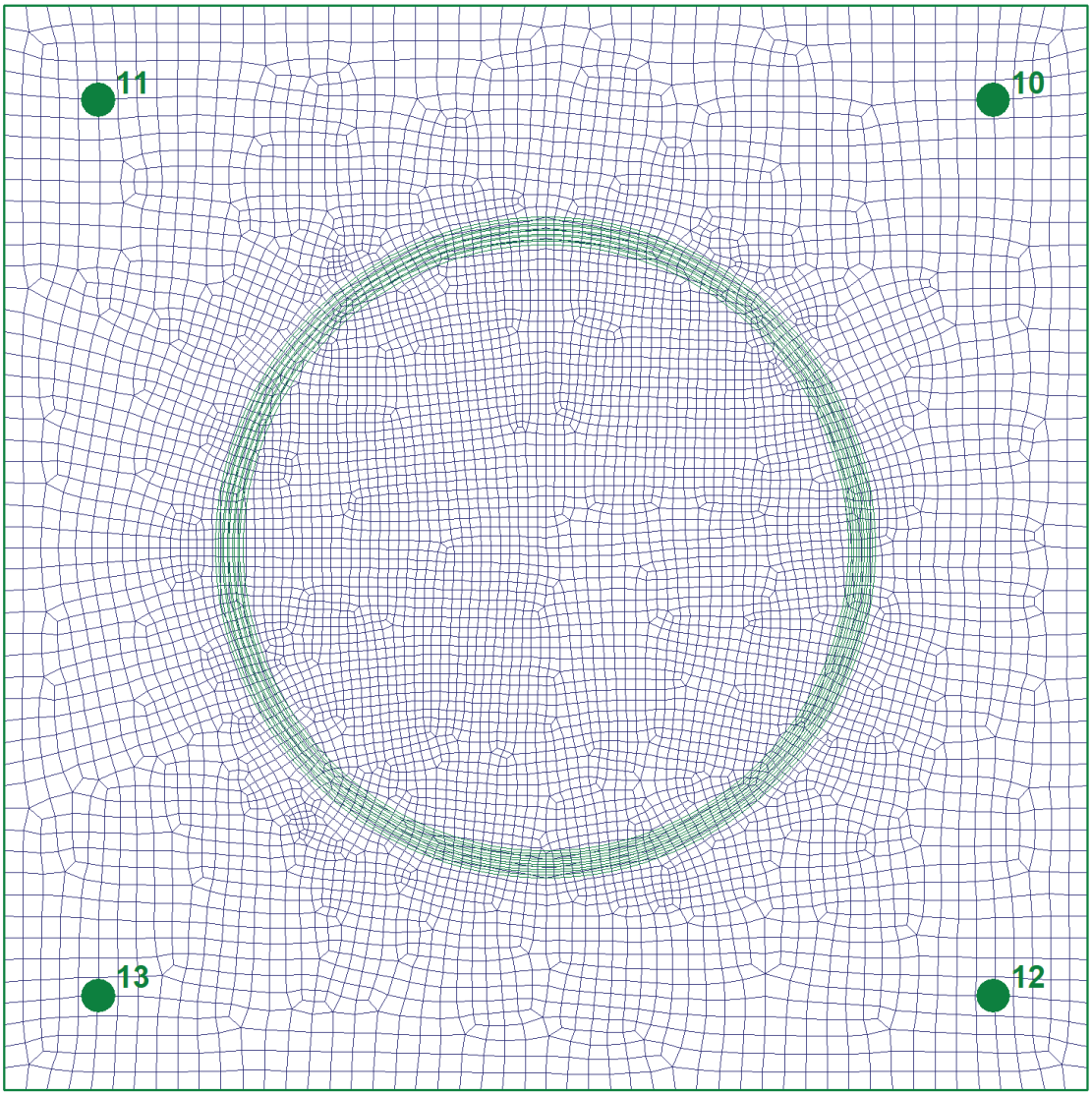

Steel Base Plate by FEM

DESCRIPTION: BASEPLATE C6

Maximum Bending Stress from all Load Combinations

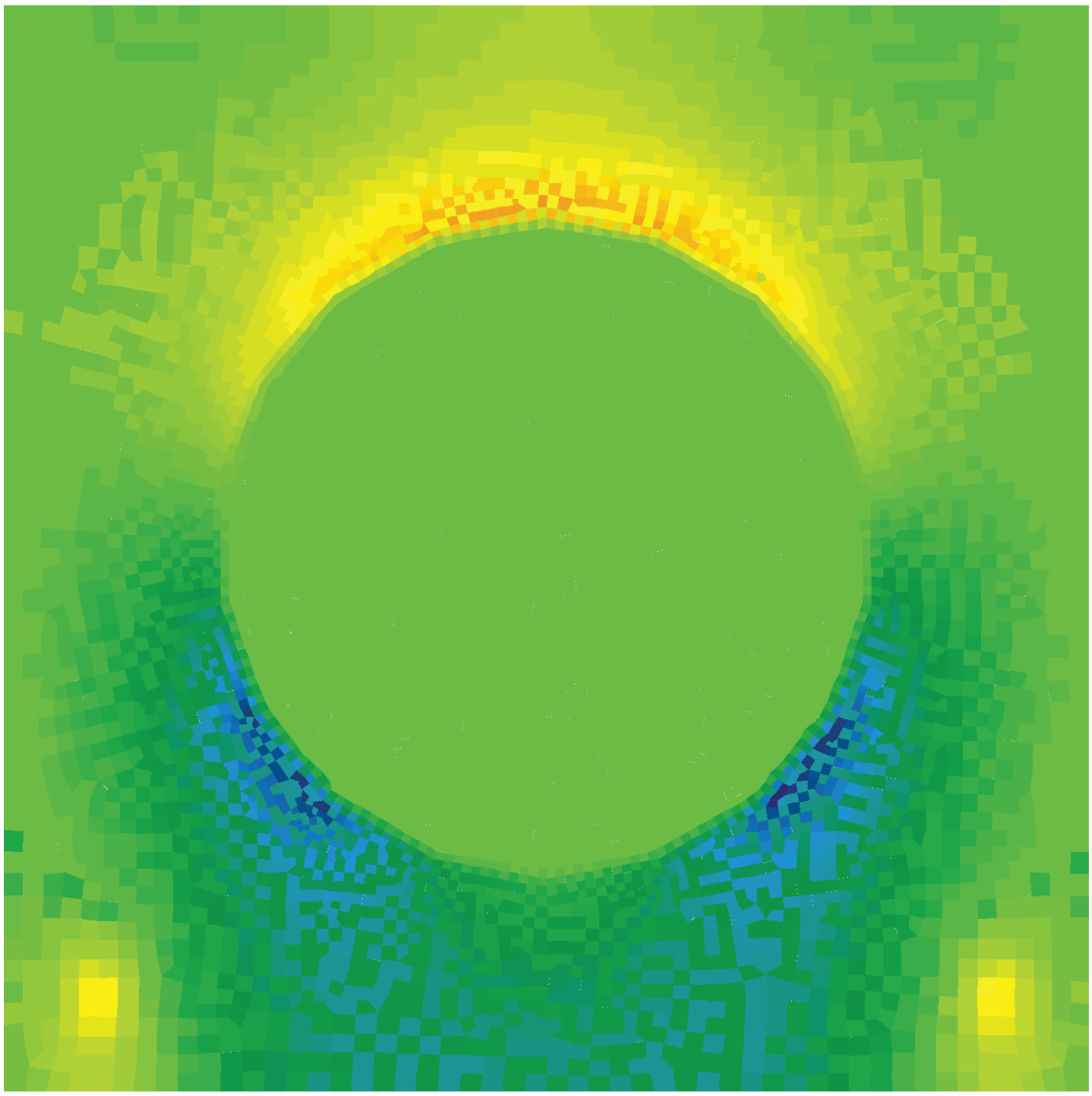

THE SADLER GROUP
4055 International Plaza, Suite 540
FORT WORTH TX
(817) 332-1074

Project Title:
Engineer:
Project ID:
Project Descr:

Steel Base Plate by FEM

Project File: Shelter Cove Park - 9888-1.ec6

LIC# : KW-06015008, Build:20.23.2.14 THE SADLER GROUP (c) ENERCALC INC 1983-2022

DESCRIPTION: BASEPLATE C7

Code References

Calculations per AISC Design Guide # 1, IBC 2021, CBC 2019, ASCE 7-16, AISC 360-16
Load Combination Set : IBC 2021

General Information

Material Properties

AISC Design Method	Allowable Strength Design			
Steel Plate Fy	=	36 ksi		
Concrete Support f'c	=	3 ksi	Ω c : ASD Safety Factor	2.310
			Nominal Bearing Fp per J8	2.550 ksi

Column, Plate & Pedestal

Column Properties

Steel Section	HSS 18x0.375		
Depth	18 in	Area	19.4 in^2
Width	18 in	Ixx	754 in^4
Flange Thickness	0.349 in	Iyy	754 in^4
Web Thicknes	in		

Column Rotation & Offset

Column Rotation	0 deg
Offset from "X" Plate Center	in
Offset from "Z" Plate Center	in

Plate Dimensions

N : Length	30.0 in
B : Width	30.0 in
Thickness	1.50 in

Column fully welded to base plate.

Support Dimensions

Width along "X"	30.0 in
Length along "Z'	30.0 in

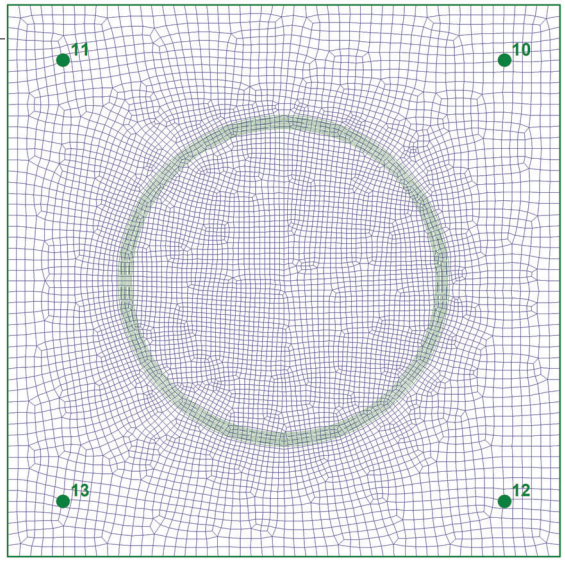

Applied Loads

	P-Y	V-X	V-Z	M-X	M-Z
D : Dead Load	3.554 k	2.023 k	k	29.655 k-ft	k-ft
L : Live	k	k	k	k-ft	k-ft
Lr : Roof Live	k	k	k	k-ft	k-ft
S : Snow	k	k	k	k-ft	k-ft
W : Wind	k	k	k	k-ft	k-ft
E : Earthquake	k	k	k	k-ft	k-ft
H : Lateral Earth	k	k	k	k-ft	k-ft

" P " = Gravity load, "+" sign is downward "+" Moments create higher soil pressure at +Z ed
"+" Shears push plate towards +Z edge

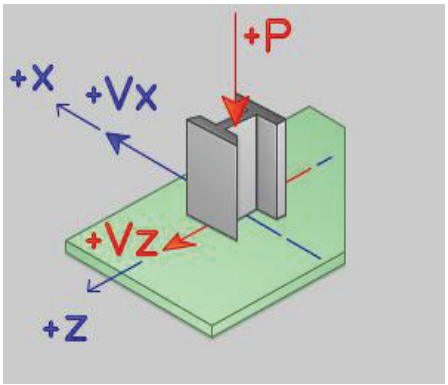

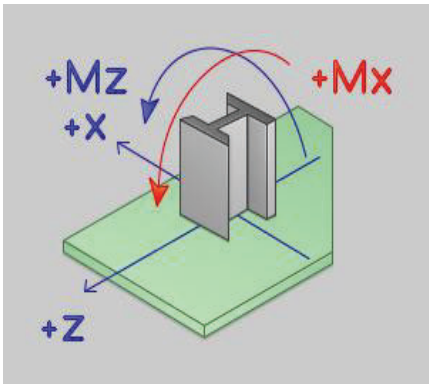

THE SADLER GROUP
4055 International Plaza, Suite 540
FORT WORTH TX
(817) 332-1074

Project Title:
Engineer:
Project ID:
Project Descr:

Steel Base Plate by FEM

Project File: Shelter Cove Park - 9888-1.ec6

LIC# : KW-06015008, Build:20.23.2.14 THE SADLER GROUP (c) ENERCALC INC 1983-2022

DESCRIPTION: BASEPLATE C7

Anchors

Anchor Diameter	1.5	in	Tension Cap. in Concrete	63.617	k	Phi: 0.70
Anchor Length	36.0	in	Steel Strength in Tension	60.0	ksi	Phi: 0.75
			Shear Cap. in Concrete	38.170	k	Phi: 0.70
					ksi	Phi: 0.65

Anchor Bolt Placements

Number of Anchors 2

X,Z Datum @ Center of Plate	X	Z		Add Anchor Symmetric about X	Add Anchor Symmetric about Z
# 1	12.0	12.0 in	# 2	12.0	-12.0 in	☒	☐

Governing Conditions

Design Method
Governing Stress Ratio **0.188**
Design Plate Size

Bending Stress Ratio **0.188**

fb : Max. Bending Stress 0.00 ksi
Fb : Allowable 0.00 ksi
Location from Plate Center: X: 0.772 in Z: 9.223 in

Plate Bearing Stress Ratio **0.167**

fu : Max. Bearing Stress 0.00 ksi
Fp : Allowable 0.00 ksi
Location from Plate Center: X: 0.077 in Z: -11.788 in

Bolt Tension Stress Ratio **0.147**

D Only
Maximum Bolt Tension 6.56 k
Allowable Tension/Pullout k
Location from Plate Center: X: 12.000 in Z: -12.000 in

THE SADLER GROUP
4055 International Plaza, Suite 540
FORT WORTH TX
(817) 332-1074

Project Title:
Engineer:
Project ID:
Project Descr:

Steel Base Plate by FEM

LIC# : KW-06015008, Build:20.23.2.14 THE SADLER GROUP (c) ENERCALC INC 1983-2022

DESCRIPTION: BASEPLATE C7

Generated Mesh

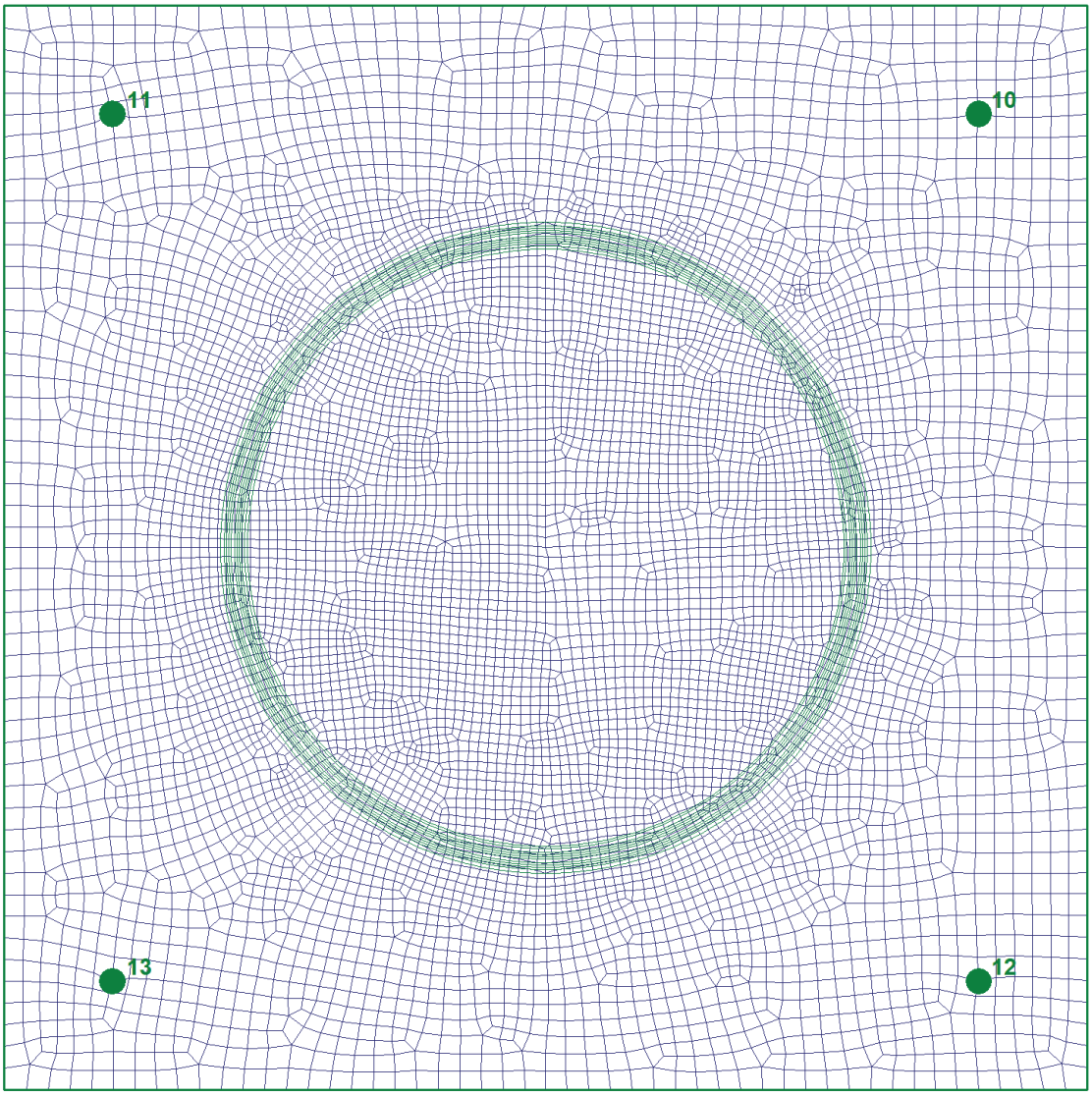

Steel Base Plate by FEM

DESCRIPTION: BASEPLATE C7

Maximum Bending Stress from all Load Combinations

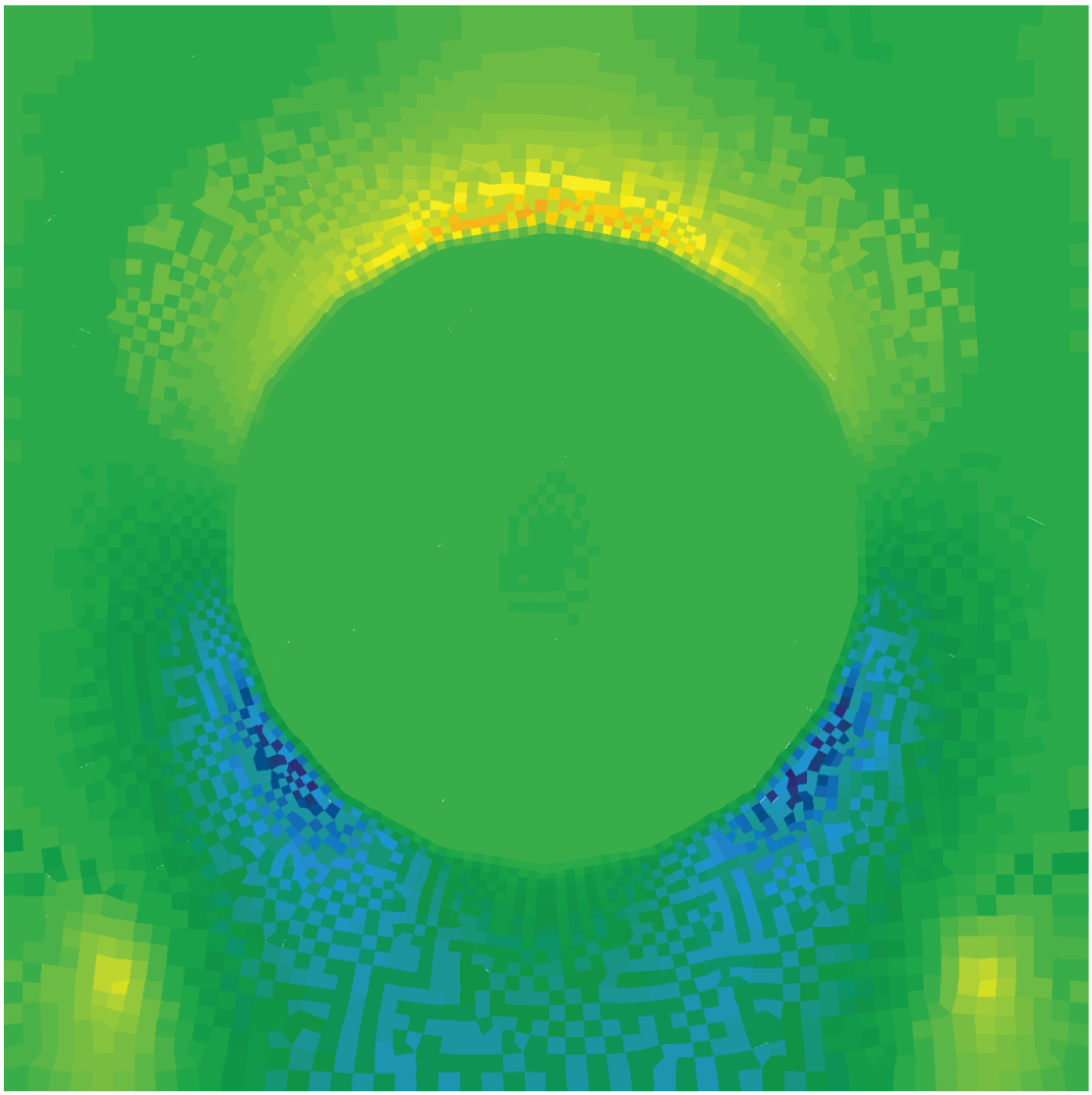

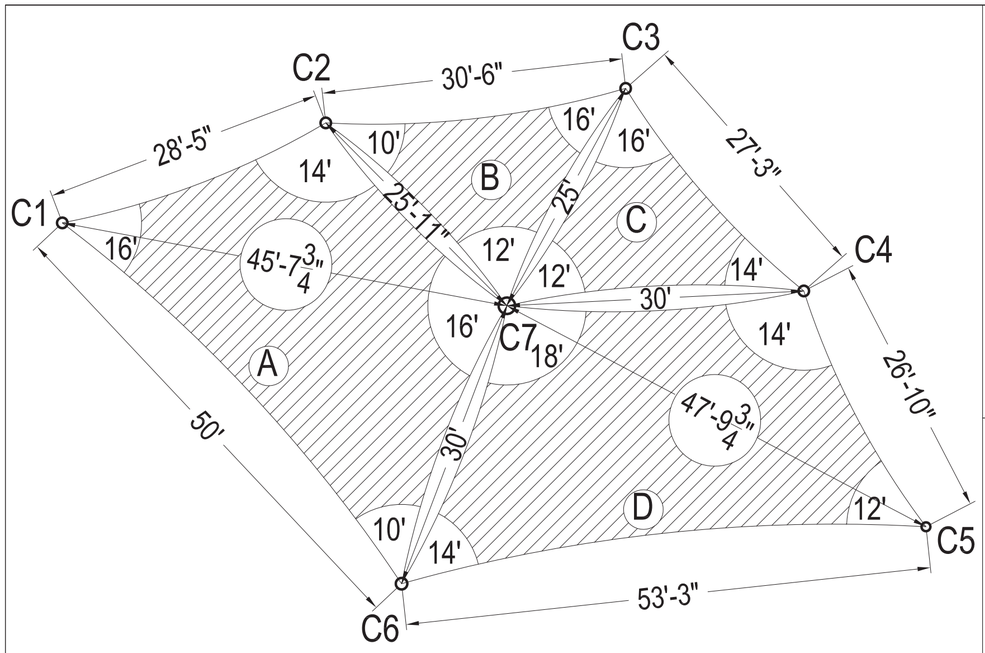

5/16" DIA. STAINLESS STEEL CABLE AROUND PERIMETER OF MATERIAL

1 PLAN VIEW

NOTE: NUMBERS IN CORNERS OF FABRIC INDICATE SAIL ATTACHMENT POINT HEIGHTS

IMPORTANT - PLEASE NOTE:
CENTER-TO-CENTER MEASUREMENTS FOR COLUMN LAYOUT ABOVE MUST BE MAINTAINED PRECISELY AS SHOWN. AS SAIL COLUMN LOCATIONS SHOWN ALLOW LESS THAN 1" OF TOLERANCE, ANY GREATER INSTALLED VARIANCE MAY CAUSE YOUR FABRIC CANOPY TO NOT FIT AS DESIGNED. A LOOSE OR POORLY FITTING CANOPY CAN BE SUSPECTIBLE TO DAMAGES WHICH WILL NOT BE COVERED UNDER WARRANTY. PLEASE NOTIFY SHADE SYSTEMS IMMEDIATELY IF COLUMN LOCATIONS VARY MORE THAN 1" FROM THE MEASUREMENTS SHOWN ON THIS PLAN.

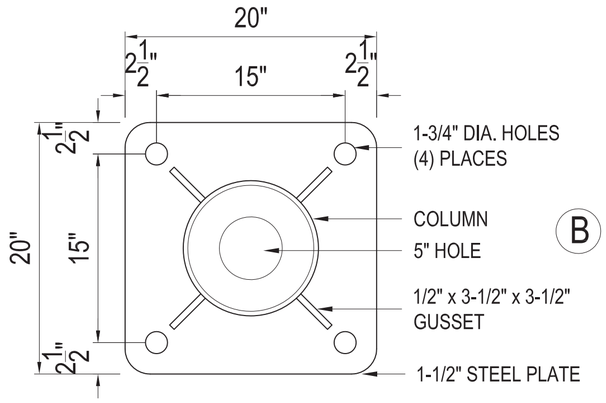

B BASE PLATE C5

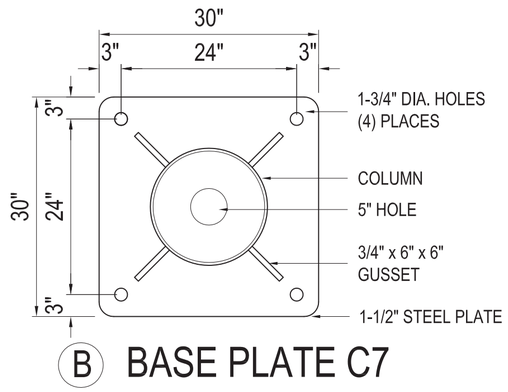

B BASE PLATE C7

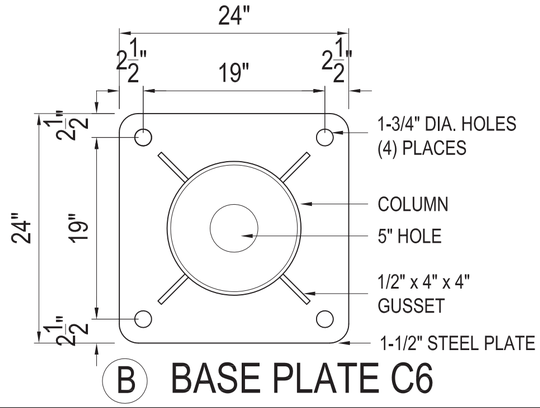

B BASE PLATE C6

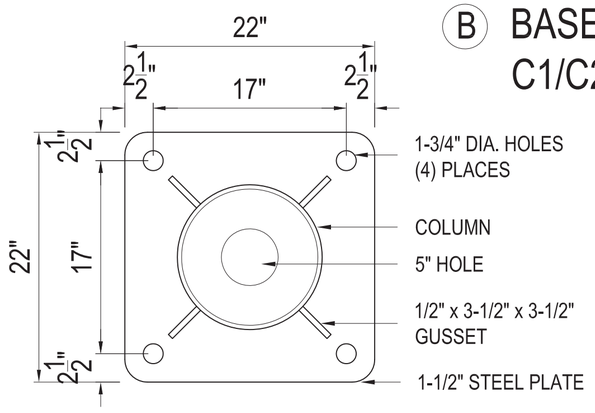

B BASE PLATE C1/C2/C3/C4

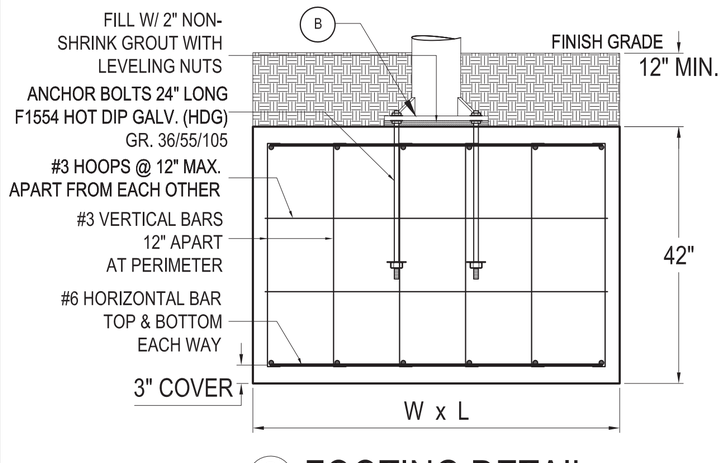

2 FOOTING DETAIL

NOTE: GROUT, HOOPS, REBARS & ANCHOR BOLTS NOT SUPPLIED BY FACTORY

	STEEL COLUMN	FOOTER W x L	ANCHOR BOLT SIZE	NUMBER OF HORIZONTAL REBARS EACH WAY
C1	12-3/4" DIA. X .375" WALL	94" X 94"	1-1/2"Ø	9
C2	12-3/4" DIA. X .375" WALL	100" X 100"	1-1/2"Ø	9
C3	12-3/4" DIA. X .375" WALL	92" X 92"	1-1/2"Ø	8
C4	12-3/4" DIA. X .375" WALL	100" X 100"	1-1/2"Ø	9
C5	10-3/4" DIA. X .365" WALL	90" X 90"	1-1/2"Ø	8
C6	14" DIA. X .375" WALL	110" X 110"	1-1/2"Ø	10
C7	18" DIA. X .375" WALL	124" X 124"	1-1/2"Ø	11

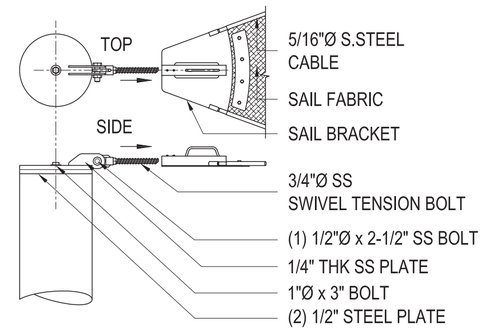

3 SAIL TOP CORNER DETAIL

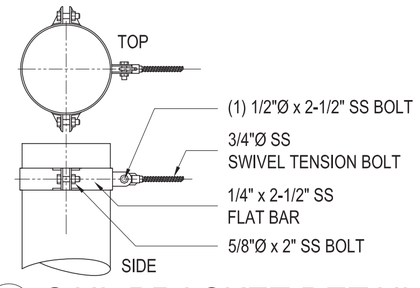

4 SAIL BRACKET DETAIL

GENERAL NOTES

1- THE SHADE SYSTEMS, INC.™ STRUCTURE HAS BEEN DESIGNED IN ACCORDANCE WITH THE 2018 IBC CODES ALONG WITH ANY ADOPTED STATE BUILDING CODES AND ASCE 7-16 TO THE FOLLOWING DESIGN CRITERIA:

	STRUCTURE WITH FABRIC CANOPY REMOVED
CATEGORY	II
EXPOSURE	C
BASIC WIND SPEED WITHOUT FABRIC	141 MPH
BASIC WIND SPEED WITH FABRIC	115 MPH

2- THE FOUNDATION ASSUMES SOIL CLASS MATERIAL 5, VERTICAL FOUNDATION PRESSURE 1500 PSF, LATERAL BEARING PRESSURE 100 PSF/FT. [PER IBC, TABLE 1806.2]

3- ALL FASTENERS SHALL BE STAINLESS STEEL.

4- ALL BOLTS MUST BE SNUG TIGHT. THE SNUG TIGHTENED CONDITION IS THE TIGHTNESS THAT IS ATTAINED WITH THE FULL EFFORT OF A TYPICAL WORKER USING AN ORDINARY SPUD WRENCH TO BRING THE PLIES INTO FIRM CONTACT. SNUG TIGHT IS THE CONDITION THAT EXISTS WHEN ALL THE PLIES IN A CONNECTION HAVE BEEN PULLED INTO FIRM CONTACT BY THE BOLTS IN THE JOINT AND ALL THE BOLTS IN THE JOINT HAVE BEEN TIGHTENED SUFFICIENTLY TO PREVENT THE REMOVAL OF THE NUTS WITHOUT THE USE OF A WRENCH.

5- FABRIC MAY NOT WITHSTAND WINDS IN EXCESS OF 90 MPH AND THEREFORE IT SHALL BE RELEASED.

STEEL:

1- GALV. STEEL TUBES MIN Fy=50KSI. STEEL ROUND PIPE SHALL BE ASTM A53 GRADE B, STEEL HSS ROUND AND HSS RECTANGULAR SHALL BE ASTM A500 GRADE B. STEEL PLATE SHALL CONFORM WITH ASTM A36.

2- ALL PARTS SHALL BE FACTORY-WELDED TO AMERICAN WELDING SOCIETY (AWS) SPECIFICATIONS AND SHALL UTILIZE E70-S6 AND HAVE THE HIGHEST STANDARDS OF QUALITY WORKMANSHIP.

3- ALL WELDS SHALL BE FILLET WELDS WITH MAXIMUM PERMISSABLE THROAT THICKNESS OR FULL PENETRATION GROOVE WELDS.

CONCRETE:

1- ALL CONCRETE SHALL BE MIXED AND PLACED IN ACCORDANCE WITH THE LATEST EDITION OF ACI 301 AND 318.

2- CONCRETE SHALL HAVE A MINIMUM 28 DAY COMPRESSIVE STRENGTH (f'c) OF 3000 PSI. A CONCRETE MIX HAVING A LISTED STRENGTH OF AT LEAST 3000 PSI THAT IS MIXED IN ACCORDANCE WITH THE MANUFACTURER'S RECOMMENDATIONS IS ACCEPTABLE FOR USE.

3- REINFORCING STEEL SHALL BE ASTM A-615 GRADE 60 WITH A MINIMUM YIELD STRENGTH (fy) OF 60 KSI.

4- UNLESS OTHERWISE SHOWN, CONCRETE COVER SHALL BE 3" (MIN).

THIS DOCUMENT AND ITS CONTENTS ARE THE PROPERTY OF SHADE SYSTEMS, INC., AND CANNOT BE MODIFIED, USED, OR RESOLD TO ANY PERSON OR ENTITY WITHOUT WRITTEN PERMISSION FROM SHADE SYSTEMS, INC. REPRODUCTION OF THESE PLANS, EITHER IN WHOLE OR IN PART, INCLUDING ANY FORM OF COPYING AND/OR PREPARATION OF DERIVATIVE WORKS THEREOF, FOR ANY REASON WITHOUT PRIOR WRITTEN PERMISSION FROM SHADE SYSTEMS, INC. IS STRICTLY PROHIBITED.
© 2025 SHADE SYSTEMS INC.

NOTE TO OWNER:
OWNER ACCEPTS FULL RESPONSIBILITY FOR REMOVING THE FABRIC SHADE MATERIAL FROM THE STEEL FRAME WHEN SEVERE WEATHER CONDITIONS ARE PREDICTED. SUCH CONDITIONS INCLUDE PREDICTED WIND SPEEDS IN EXCESS OF 90 MPH. ALSO, AS STRUCTURE IS NOT DESIGNED FOR ANY SNOW LOAD, IT IS RECOMMENDED THAT CANOPY BE REMOVED WHEN SNOWFALL IS EXPECTED.

Shade systems INC.
4150 S.W. 19 Street
Ocala, FL 34474
Tel.: 1-800-609-6066

Shelter Cove Park
39 Shelter Cove Lane
Hilton Head Island, SC 29928

Approved:

SOUTH CAROLINA REGISTERED PROFESSIONAL ENGINEER No. 12481 THOMAS R. SADLER

Model Name:
CUSTOM SAIL SHADE SYSTEM STRUCTURE

Model No.:
SAIL

Revisions

REP:

REP QTE. NO.
Q-14193

Approved:	JRB	Job: 9888-1
Checked:	MG	
Drawn:	AG	
Date:	04/17/2025	Sheets: 1 OF 1
NOT TO SCALE		

Shade systems INC.
the coolest solutions under the sun®

STRUCTURAL CALCULATIONS

Project:

Shelter Cove Park - 9888-2

Location:

39 Shelter Cove Lane

Hilton Head Island, SC 29928

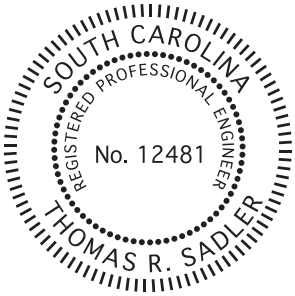

April 19, 2025

THE SADLER GROUP
Structural Engineers

500 Main Street, Suite 700
Fort Worth, Texas 76102-3944
(817) 332-1074

Table of Contents

Wind Loads **2**

RFEM Report **3**

Footing Design **11**

Baseplate **19**

THE SADLER GROUP	Project	Shelter Cove Park - 9888-2			Job Ref.	
	Section	Load Calculations			Sheet no./rev.	2
4055 International Plaza, Suite 540 Fort Worth, Texas 76109	Calc. by	Date	Chk'd by	Date		
	NRA	4/19/2025	TRS	4/19/2025		

Code Used:

International Building Code (IBC) 2021

ASCE 7-16 Minimum Design Loads for Buildings and Other Structures

Fabric load (w_f)	=	0.5	psf	
Roof load (w_r)	=	5	psf	
Wind Load:				
Basic Wind Speed without Fabric (V_{ult})	=	141	mph	Fig. 26.5-1 ASCE-16
Nominal Wind Speed without Fabric (V_n)	=	111	mph	
Basic Wind Speed with Fabric (V_{ut})	=	115	mph	See Owner Notes
Nominal Wind Speed with Fabric (V_{asd})	=	90	mph	See Owner Notes
Building Risk Category	=	Type II		Table 1604.5 IBC 2021
Exposure Category	=	C		Sec. 26.7.3 ASCE 7-16
Wind Pressure (p)	=	$q_h x G x C_N$		Sec. 27.3.2 ASCE 7-16
Velocity pressure (q_h)	=	$0.00256 x K_z x K_{zt} x K_d x K_e x V^2$		Sec. 26.10.2 ASCE 7-16
Velocity press. Exposure Coeff. (K_z)	=	0.85		Table 26.10-1 ASCE 7-16
Topographic Factor (K_{zt})	=	1.00		Sec. 26.8.2 ASCE 7-16
Wind directionality (K_d)	=	0.85		Table 26.6-1 ASCE 7-16
Ground Elevation Factor (K_e)	=	1.00		Table 26.9-1 ASCE 7-16
Guest Effect Factor (G)	=	0.85		Sec. 26.11 ASCE 7-16
Hip Like Structure				
Net Press. Coeff. Load Case A (C_{NWA})	=	1.10		Fig. 27.3-5 ASCE 7-16
Net Press. Coeff. Load Case A (C_{NLA})	=	-0.40		Fig. 27.3-5 ASCE 7-16
Net Press. Coeff. Load Case B (C_{NWB})	=	0.1		Fig. 27.3-5 ASCE 7-16
Net Press. Coeff. Load Case B (C_{NLB})	=	-1.1		Fig. 27.3-5 ASCE 7-16
Velocity Press.Load Case A (C_{NWA})	=	**22.9**	psf	=0.00256*Kz*kzt*Kd*Ke*Vut^2*G*Cnwa
Net Press. Coeff. Load Case A (C_{NLA})	=	**-8.3**	psf	=0.00256*Kz*kzt*Kd*Ke*Vut^2*G*Cnla
Net Press. Coeff. Load Case B (C_{NWB})	=	**2.1**	psf	=0.00256*Kz*kzt*Kd*Ke*Vut^2*G*Cnwb
Net Press. Coeff. Load Case B (C_{NLB})	=	**-22.9**	psf	=0.00256*Kz*kzt*Kd*Ke*Vut^2*G*Cnlb

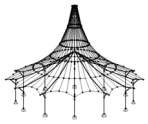

The Sadler Group
+1 817 332 1074
4055 International Plaza, Suite 540 Fort Worth, Texas 76109

Project: SS | Model: Shelter Cove Park - 9888-2 | Date: 4/21/2025
SHADE SYSTEMS

MODEL - GENERAL DATA

General	Model name	:	Shelter Cove Park - 9888-2
	Project name	:	SS
	Project description	:	SHADE SYSTEMS
	Type of model	:	3D
	Positive direction of global axis Z	:	Upward
	Classification of load cases and combinations	:	According to Standard: ASCE 7-16 National Annex: None
	☒ Automatically create combinations	:	☒ Load Combinations
Options	☒ RF-FORM-FINDING - Find initial equilibrium shapes of membrane and cable structures		
	☐ RF-CUTTING-PATTERN		
	☐ Piping analysis		
	☐ Use CQC Rule		
	☐ Enable CAD/BIM model		
	Standard Gravity		
	g	:	32.17 ft/s²

FE MESH SETTINGS

General	Target length of finite elements	l_{FE}	:	1.00 ft
	Maximum distance between a node and a line to integrate it into the line	ε	:	0.00 ft
	Maximum number of mesh nodes (in thousands)		:	500
Members	Number of divisions of members with cable, elastic foundation, taper, or plastic characteristic		:	10
	☒ Activate member divisions for large deformation or post-critical analysis			
	☒ Use division for members with node lying on them			
Surfaces	Maximum ratio of FE rectangle diagonals	Δ_D	:	1.80
	Maximum out-of-plane inclination of two finite elements	α	:	0.50 °
	Shape direction of finite elements		:	Triangles and quadrangles ☒ Same squares where possible

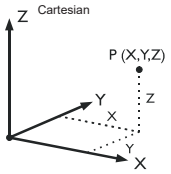

1.1 NODES

Node No.	Node Type	Reference Node	Coordinate System	Node Coordinates X [ft]	Y [ft]	Z [ft]	Comment
1	Standard	-	Cartesian	0.00	0.00	0.00	Supported
2	Standard	-	Cartesian	40.00	0.00	0.00	Supported
3	Standard	-	Cartesian	0.00	30.00	0.00	Supported
4	Standard	-	Cartesian	40.00	30.00	0.00	Supported
5	Standard	-	Cartesian	0.00	0.00	27.00	
6	Standard	-	Cartesian	40.00	0.00	22.00	
7	Standard	-	Cartesian	0.00	30.00	22.00	
8	Standard	-	Cartesian	40.00	30.00	27.00	

1.2 LINES

Line No.	Line Type	Nodes No.	Line Length L [ft]		Comment
1	Polyline	1,5	27.00	Z	
2	Polyline	3,7	22.00	Z	
3	Polyline	4,8	27.00	Z	
4	Polyline	2,6	22.00	Z	
5	Polyline	6,5	40.31	XZ	
6	Polyline	5,7	30.41	YZ	
7	Polyline	7,8	40.31	XZ	
8	Polyline	8,6	30.41	YZ	
9	Polyline	5,8	50.00	XY	

1.3 MATERIALS

Matl. No.	Modulus E [psi]	Modulus G [psi]	Poisson's Ratio ν [-]	Spec. Weight γ [lbf/ft³]	Coeff. of Th. Ex α [1/°F]	Partial Factor γ_M [-]	Material Model
1	CABLE						
	18854900.0	7251890.0	0.300	499.43	8.89E-06	1.10	Isotropic Linear Elastic
	User-Defined Material						
2	Steel A500, Grade B (Rounds) | ANSI/AISC 360-16:2016						
	29000000.0	11200000.0	0.295	490.00	6.67E-06	1.00	Isotropic Linear Elastic
3	HDPE						
				0.00E+00	0.00E+00	1.00	Orthotropic Elastic 2D...
	Additional material parameters are defined in the Material Model dialog box						

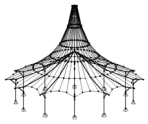

The Sadler Group
+1 817 332 1074
4055 International Plaza, Suite 540 Fort Worth, Texas 76109

Project: SS
SHADE SYSTEMS
Model: Shelter Cove Park - 9888-2
Date: 4/21/2025

1.3.5 MATERIALS - MATERIAL MODEL - ORTHOTROPIC ELASTIC 2D

Matl. No.	Modulus of Elasticity [psi] E_x	E_y	Shear Modulus [psi] G_{yz}	G_{xz}	G_{xy}	Poisson's Ratio[-] ν_{xy}	ν_{yx}
3	HDPE						
	1236.0	11665.0	15000.0	15000.0	15000.0	0.300	2.831

1.4 SURFACES

Surface No.	Surface Type Geometry	Stiffness	Boundary Lines No.	Matl. No.	Thickness Type	d [in]	Area A [ft²]	Weight W [lb]
1	Plane	Membrane - Orthotropic	6,7,9	3	Constant	0.08	105.17	0.00
2	Plane	Membrane - Orthotropic	5,8,9	3	Constant	0.08	105.17	0.00

1.4.3 SURFACES - FORM-FINDING

Surface No.	Calculation Method	Specify Forces $n_{x'}$ [kip/ft]	$n_{y'}$ [kip/ft]	Specify Stress $\sigma_{x'}$ [ksi]	$\sigma_{y'}$ [ksi]	Interior Pressure p_p [ksi]	
1	Standard	0.01	0.01	0.01	0.01	0.000	
2	Standard	0.01	0.01	0.01	0.01	0.000	

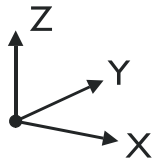

1.7 NODAL SUPPORTS

Support No.	Nodes No.	Axis System	Column in Z	Support Conditions u_X	u_Y	u_Z	φ_X	φ_Y	φ_Z
1	1-4	Global X,Y,Z	☐	☒	☒	☒	☒	☒	☒

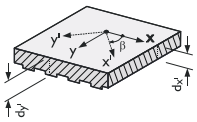

1.12 ORTHOTROPIC SURFACES AND MEMBRANES

Surface No.	Definition Type	Orthotropy Direction β [°]	Stiffness Reduction Factors k [-]	k_b [-]	k_{33} [-]	k_s [-]	k_{44} [-]	k_{55} [-]	k_m [-]	k_{88} [-]	k_e [-]
1	Constant thickness	0.00	1.00	-	-	-	-	-	-		-
2	Constant thickness	0.00	1.00	-	-	-	-	-	-		-

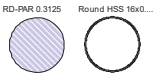

1.13 CROSS-SECTIONS

Section No.	Matl. No.	J [in⁴] A [in²]	I_y [in⁴] A_y [in²]	I_z [in⁴] A_z [in²]	Principal Axes α [°]	Rotation α' [°]	Overall Dimensions [in] Width b	Height h
1	RD-PAR 0.3125							
	1	0.0	0.0	0.0	0.00	0.00	0.31	0.31
		0.1	0.1	0.1				
2	Round HSS 16x0.375 | AISC 14							
	2	1050.0	526.0	526.0	0.00	0.00	16.00	16.00
		17.2	10.9	10.9				

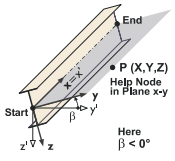

1.17 MEMBERS

Mbr. No.	Line No.	Member	Rotation Type	β [°]	Cross-Section Start	End	Hinge No. Start	End	Ecc. No.	Div. No.	Length L [ft]	
1	1	Beam	Angle	0.00	2	2	-	-	-	-	27.00	Z
2	2	Beam	Angle	0.00	2	2	-	-	-	-	22.00	Z
3	3	Beam	Angle	0.00	2	2	-	-	-	-	27.00	Z
4	4	Beam	Angle	0.00	2	2	-	-	-	-	22.00	Z
5	5	Cable	Angle	0.00	1	1	-	-		-	40.31	XZ
6	6	Cable	Angle	0.00	1	1	-	-		-	30.41	YZ
7	7	Cable	Angle	0.00	1	1	-	-		-	40.31	XZ
8	8	Cable	Angle	0.00	1	1	-	-		-	30.41	YZ

1.17.6 MEMBERS - FORM-FINDING

Mbr. No.	Target cable length absolute L_c [ft]	relative L_{rel} [%]	Target cable sag absolute S [ft]	relative S_{rel} [%]	Force density T_d [kip/ft]	Average force in cable T [kip]	Internal Forces Beam Definition
5	49.38	122.50	12.09	30.00	-	-	-
6	37.26	122.50	9.12	30.00	-	-	-
7	49.38	122.50	12.09	30.00	-	-	-
8	37.26	122.50	9.12	30.00	-	-	-

The Sadler Group
+1 817 332 1074
4055 International Plaza, Suite 540 Fort Worth, Texas 76109

MODEL

Project: SS
SHADE SYSTEMS
Model: Shelter Cove Park - 9888-2
Date: 4/21/2025

MODEL

Surface Numbering
Line Numbering
Node Numbering
Member Numbering
Support Numbering

Isometric

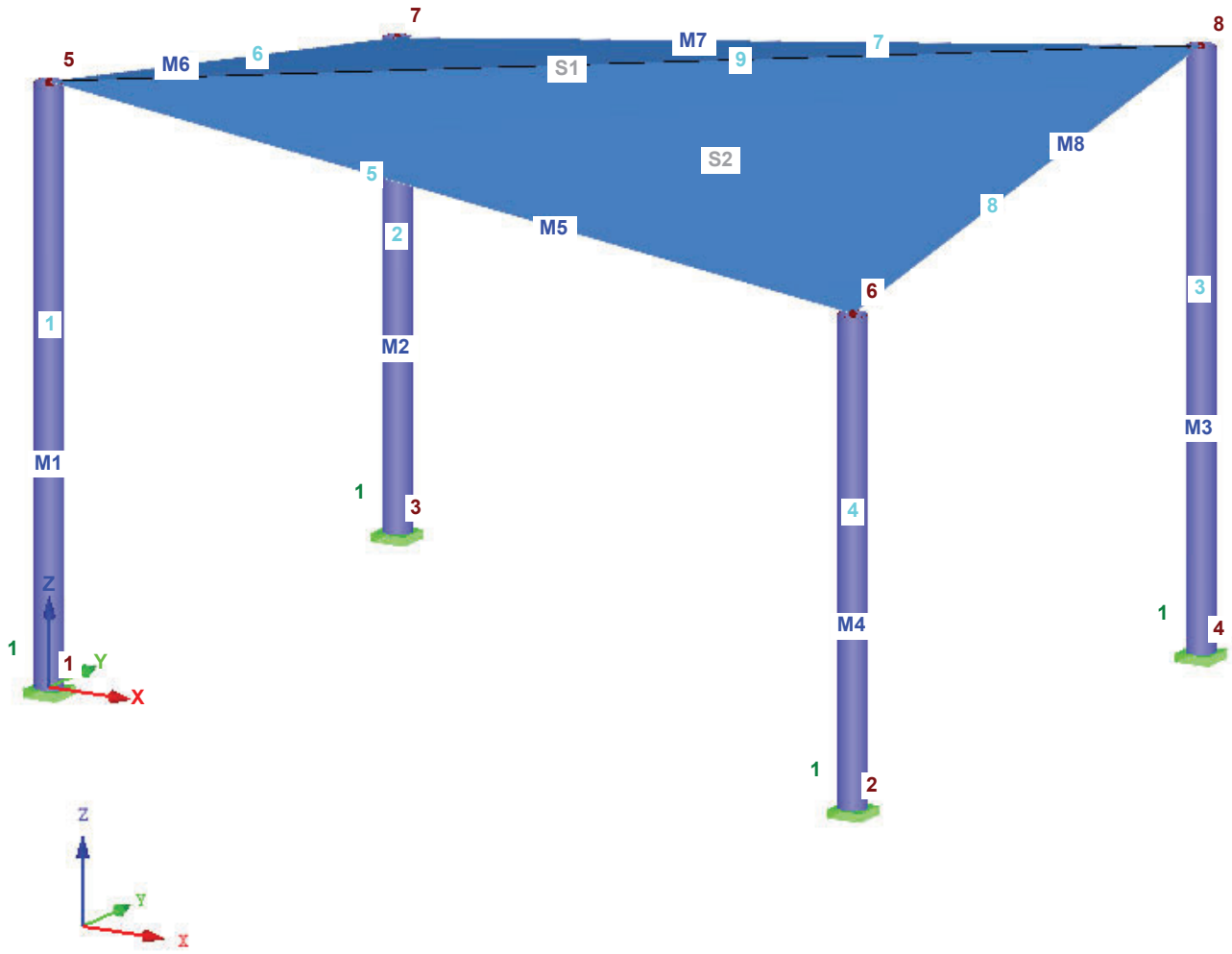

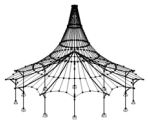

The Sadler Group
+1 817 332 1074
4055 International Plaza, Suite 540 Fort Worth, Texas 76109

Project: SS
SHADE SYSTEMS
Model: Shelter Cove Park - 9888-2
Date: 4/21/2025

2.1 LOAD CASES

Load Case	Load Case Description	ASCE 7-16 Action Category	Self-Weight - Factor in Direction Active	X	Y	Z
LC1	DL	Dead	☒	0.000	0.000	-1.000
LC2	LL	Live	☐			
LC3	WL A	Wind	☐			
LC4	WL B	Wind	☐			
Form-Finding			☐			

2.5 LOAD COMBINATIONS

Load Combin.	DS	Load Combination Description	No.	Factor	Load Case	
CO1	-	D	1	1.00	LC1	DL
CO2	-	D + L	1	1.00	LC1	DL
			2	1.00	LC2	LL
CO3	-	D + 0.6W1	1	1.00	LC1	DL
			2	0.60	LC3	WL A
CO4	-	D + 0.6W2	1	1.00	LC1	DL
			2	0.60	LC4	WL B
CO5	-	D + 0.75L + 0.45W1	1	1.00	LC1	DL
			2	0.75	LC2	LL
			3	0.45	LC3	WL A
CO6	-	D + 0.75L + 0.45W2	1	1.00	LC1	DL
			2	0.75	LC2	LL
			3	0.45	LC4	WL B
CO7	-	0.6D + 0.6W1	1	0.60	LC1	DL
			2	0.60	LC3	WL A
CO8	-	0.6D + 0.6W2	1	0.60	LC1	DL
			2	0.60	LC4	WL B

2.7 RESULT COMBINATIONS

Result Combin	Description	Loading
RC1		CO1/p or to CO8

LC1
DL

3.4 SURFACE LOADS — LC1: DL

No.	On Surfaces No.	Load Type	Load Distribution	Load Direction	Load Parameters Symbol	Value	Unit
1	1,2	Force	Uniform	ZL	p	-0.500	psf

LC2
LL

3.4 SURFACE LOADS — LC2: LL

No.	On Surfaces No.	Load Type	Load Distribution	Load Direction	Load Parameters Symbol	Value	Unit
1	1,2	Force	Uniform	ZL	p	-5.000	psf

LC3
WL A

3.4 SURFACE LOADS — LC3: WL A

No.	On Surfaces No.	Load Type	Load Distribution	Load Direction	Load Parameters Symbol	Value	Unit
1	1	Force	Uniform	ZL	p	-22.900	psf
2	2	Force	Uniform	ZL	p	8.300	psf

LC4
WL B

3.4 SURFACE LOADS — LC4: WL B

No.	On Surfaces No.	Load Type	Load Distribution	Load Direction	Load Parameters Symbol	Value	Unit
1	1	Force	Uniform	ZL	p	22.900	psf
2	2	Force	Uniform	ZL	p	-2.100	psf

4.1 NODES - SUPPORT FORCES

Node No.	LC/CO	Support Forces [kip] $P_{X'}$	$P_{Y'}$	$P_{Z'}$	Support Moments [kipft] $M_{X'}$	$M_{Y'}$	$M_{Z'}$	
1	Form-Finding	0.214	0.232	-0.041	-6.258	5.777	0.000	
	CO1	0.427	0.433	-1.800	-11.711	11.543	0.000	
	CO2	1.671	1.666	-2.297	-45.108	45.244	0.000	
	CO3	1.740	1.856	-2.371	-50.258	47.134	0.000	
	CO4	1.046	1.302	-1.706	-35.218	28.274	0.000	
	CO5	2.106	2.186	-2.563	-59.236	57.061	0.000	
	CO6	0.751	0.826	-1.806	-22.344	20.315	0.000	
	CO7	1.701	1.817	-1.671	-49.172	46.036	0.000	
	CO8	1.068	1.331	-1.025	-35.976	28.860	0.000	
2	Form-Finding	-0.213	0.231	0.041	-5.080	-4.682	0.000	
	CO1	-0.293	0.333	-1.345	-7.323	-6.449	0.000	
	CO2	-1.212	1.322	-1.381	-29.098	-26.681	0.000	
	CO3	-1.483	1.552	-1.174	-34.161	-32.646	0.000	

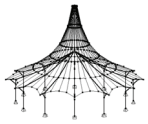

The Sadler Group
+1 817 332 1074
4055 International Plaza, Suite 540 Fort Worth, Texas 76109

4.1 NODES - SUPPORT FORCES

Node No.	LC/CO	Support Forces [kip] $P_{X'}$	$P_{Y'}$	$P_{Z'}$	Support Moments [kipft] $M_{X'}$	$M_{Y'}$	$M_{Z'}$
	CO4	-2.126	2.027	-0.886	-44.591	-46.769	0.000
	CO5	-1.640	1.735	-1.288	-38.199	-36.107	0.000
	CO6	-1.002	1.020	-1.300	-22.462	-22.066	0.000
	CO7	-1.463	1.530	-0.614	-33.666	-32.182	0.000
	CO8	-2.180	2.078	-0.310	-45.693	-47.940	0.000
3	Form-Finding	0.213	-0.231	0.041	5.080	4.682	0.000
	CO1	0.293	-0.333	-1.345	7.323	6.449	0.000
	CO2	1.212	-1.322	-1.381	29.098	26.681	0.000
	CO3	1.539	-1.663	-1.480	36.618	33.892	0.000
	CO4	2.095	-2.113	-0.597	46.457	46.070	0.000
	CO5	1.689	-1.837	-1.517	40.453	37.185	0.000
	CO6	0.971	-1.015	-1.105	22.328	21.371	0.000
	CO7	1.518	-1.638	-0.921	36.059	33.416	0.000
	CO8	2.149	-2.165	-0.020	47.597	47.246	0.000
4	Form-Finding	-0.214	-0.232	-0.041	6.258	-5.777	0.000
	CO1	-0.427	-0.433	-1.800	11.711	-11.543	0.000
	CO2	-1.671	-1.666	-2.297	45.108	-45.244	0.000
	CO3	-1.796	-1.745	-2.210	47.239	-48.629	0.000
	CO4	-1.015	-1.217	-1.786	32.906	-27.446	0.000
	CO5	-2.154	-2.085	-2.436	56.463	-58.354	0.000
	CO6	-0.720	-0.832	-1.883	22.505	-19.474	0.000
	CO7	-1.756	-1.709	-1.512	46.232	-47.517	0.000
	CO8	-1.037	-1.244	-1.105	33.617	-28.038	0.000
Σ Supp.	LC5005	0.000	0.000	0.000			
Σ Loads	LC5005	0.000	0.000	0.000			
Σ Supp.	CO1	0.000	0.000	-6.289			
Σ Supp.	CO1	0.000	0.000	-6.289			
Σ Supp.	CO2	0.000	0.000	-7.357			
Σ Supp.	CO2	0.000	0.000	-7.357			
Σ Supp.	CO3	0.000	0.000	-7.235			
Σ Supp.	CO3	0.000	0.000	-7.235			
Σ Supp.	CO4	0.000	0.000	-4.975			
Σ Supp.	CO4	0.000	0.000	-4.975			
Σ Supp.	CO5	0.000	0.000	-7.804			
Σ Supp.	CO5	0.000	0.000	-7.804			
Σ Supp.	CO6	0.000	0.000	-6.095			
Σ Supp.	CO6	0.000	0.000	-6.095			
Σ Supp.	CO7	0.000	0.000	-4.719			
Σ Supp.	CO7	0.000	0.000	-4.719			
Σ Supp.	CO8	0.000	0.000	-2.459			
Σ Supp.	CO8	0.000	0.000	-2.459			

4.1 NODES - SUPPORT FORCES

Result Combinations

Node No.	RC		Support Forces [kip] $P_{X'}$	$P_{Y'}$	$P_{Z'}$	Support Moments [kipft] $M_{X'}$	$M_{Y'}$	$M_{Z'}$
1	RC1	Max	2.106	2.186	-1.025	-11.711	57.061	0.000
		Min	0.427	0.433	-2.563	-59.236	11.543	0.000
2	RC1	Max	-0.293	2.078	-0.310	-7.323	-6.449	0.000
		Min	-2.180	0.333	-1.381	-45.693	-47.940	0.000
3	RC1	Max	2.149	-0.333	-0.020	47.597	47.246	0.000
		Min	0.293	-2.165	-1.517	7.323	6.449	0.000
4	RC1	Max	-0.427	-0.433	-1.105	56.463	-11.543	0.000
		Min	-2.154	-2.085	-2.436	11.711	-58.354	0.000

The Sadler Group
+1 817 332 1074
4055 International Plaza, Suite 540 Fort Worth, Texas 76109

GLOBAL DEFORMATIONS u

RC1 : CO1/p or to CO8
Global Deformations u [in]
Result Combinations: Max and Min Values

Isometric

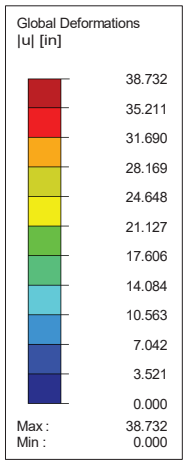

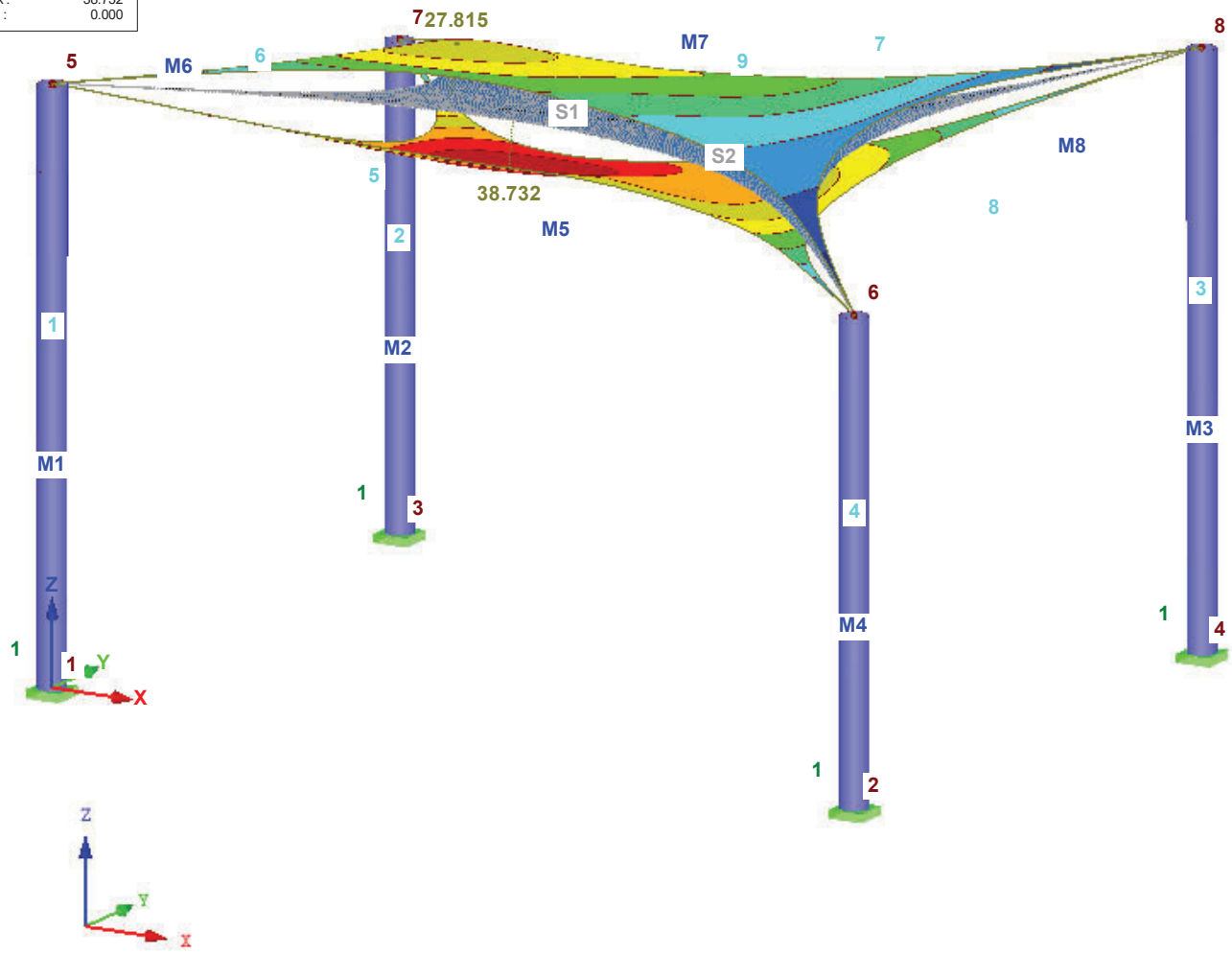

Factor of deformations: 0.94
Max u: 38.732, Min u: 0.000 in

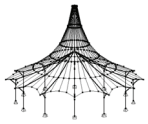

The Sadler Group
+1 817 332 1074
4055 International Plaza, Suite 540 Fort Worth, Texas 76109

Project: SS
SHADE SYSTEMS
Model: Shelter Cove Park - 9888-2
Date: 4/21/2025

RF-STEEL AISC
CA1
Design of steel members according to AISC (LRFD or ASD)

1.1 GENERAL DATA

Members to design:	1-4	
Sets of members to design:		
Standard:	ASD 2005	
Ultimate Limit State Design		
Result combinations to design:	RC1	CO1/p or to CO8

1.2 MATERIALS

Matl. No.	Material Description	E- Modulus E [ksi]	Shear Modulus G [ksi]	Poisson's Ratio ν [-]	Yield Stress f_{yk} [ksi]	Max. Thickness t [in]
2	Steel A500, Grade B (Rounds) | ANSI/AISC 360-16:2016	29000.000	11200.000	0.300	42.000	

1.3 CROSS-SECTIONS



Sect. No.	Matl. No.	Cross-Section Description	Cross-Section Type	Max Design Ratio	Comment
2	2	Round HSS 16x0.375 | AISC 14	Pipe	0.46	

1.5 EFFECTIVE LENGTHS - MEMBERS

Member No.	Buckli Possi	Length L [ft]	Buckling About Axis Possi	K_y	L [ft]	Buckling About Axis Possi	K_z	L [ft]	Torsional Buckling Possi	K_x	L [ft]	L.T.B Possi	M_e [kipft]	L_b [ft]	k_z	k_w
1	☒	27.00	☒	1.00	10.00	☒	1.00	10.00	☒	1.00	10.00	☐	Eigenvalue		1.0	1.0
2	☒	22.00	☒	1.00	8.00	☒	1.00	8.00	☒	1.00	8.00	☐	Eigenvalue		1.0	1.0
3	☒	27.00	☒	1.00	10.00	☒	1.00	10.00	☒	1.00	10.00	☐	Eigenvalue		1.0	1.0
4	☒	22.00	☒	1.00	8.00	☒	1.00	8.00	☒	1.00	8.00	☐	Eigenvalue		1.0	1.0

1.7 DESIGN PARAMETERS

Member No.	Modification Factor C_b [-]	Distance L_v [ft]	Gross Area A_g [in²]	Net Area A_n [in²]	Shear Lag Factor U [-]	Effective Area A_e [in²]	Comment
1		27.00	17.2	17.2	1.000	17.2	
2		22.00	17.2	17.2	1.000	17.2	
3		27.00	17.2	17.2	1.000	17.2	
4		22.00	17.2	17.2	1.000	17.2	

2.4 DESIGN BY MEMBER

Member No.	Location x [ft]	LC/CO/ RC	Design		Equation No.	Description
1	**Cross-section No. 2 - Round HSS 16x0.375 | AISC 14**					
	23.14	RC1	0.01	≤ 1	100)	Negligible internal forces
	0.00	RC1	0.46	≤ 1	106)	Chapter F - Yielding - Bending about y-axis and/or z-axis acc. to F8 or F11
	0.00	RC1	0.00	≤ 1	131)	Chapter F - Local buckling of round HSS does not Apply - acc. to F8
	15.43	RC1	0.02	≤ 1	162)	Chapter G - Nominal shear strength in y-axis and/or z-axis - acc. to G6
	0.00	RC1	0.46	≤ 1	331)	Chapter H - Biaxial bending without axial forces - acc. to H1.1
2	**Cross-section No. 2 - Round HSS 16x0.375 | AISC 14**					
	22.00	RC1	0.01	≤ 1	100)	Negligible internal forces
	0.00	RC1	0.37	≤ 1	106)	Chapter F - Yielding - Bending about y-axis and/or z-axis acc. to F8 or F11
	0.00	RC1	0.00	≤ 1	131)	Chapter F - Local buckling of round HSS does not Apply - acc. to F8
	0.00	RC1	0.02	≤ 1	162)	Chapter G - Nominal shear strength in y-axis and/or z-axis - acc. to G6
	0.00	RC1	0.37	≤ 1	331)	Chapter H - Biaxial bending without axial forces - acc. to H1.1
3	**Cross-section No. 2 - Round HSS 16x0.375 | AISC 14**					
	23.14	RC1	0.01	≤ 1	100)	Negligible internal forces
	0.00	RC1	0.45	≤ 1	106)	Chapter F - Yielding - Bending about y-axis and/or z-axis acc. to F8 or F11
	0.00	RC1	0.00	≤ 1	131)	Chapter F - Local buckling of round HSS does not Apply - acc. to F8
	15.43	RC1	0.02	≤ 1	162)	Chapter G - Nominal shear strength in y-axis and/or z-axis - acc. to G6
	0.00	RC1	0.45	≤ 1	331)	Chapter H - Biaxial bending without axial forces - acc. to H1.1
4	**Cross-section No. 2 - Round HSS 16x0.375 | AISC 14**					
	22.00	RC1	0.01	≤ 1	100)	Negligible internal forces
	0.00	RC1	0.37	≤ 1	106)	Chapter F - Yielding - Bending about y-axis and/or z-axis acc. to F8 or F11
	0.00	RC1	0.00	≤ 1	131)	Chapter F - Local buckling of round HSS does not Apply - acc. to F8
	3.67	RC1	0.02	≤ 1	162)	Chapter G - Nominal shear strength in y-axis and/or z-axis - acc. to G6
	0.00	RC1	0.37	≤ 1	331)	Chapter H - Biaxial bending without axial forces - acc. to H1.1

The Sadler Group
+1 817 332 1074
4055 International Plaza, Suite 540 Fort Worth, Texas 76109

DESIGN RATIO

RF-STEEL AISC CA1
Ultimate Limit State
Serviceability Limit State

Isometric

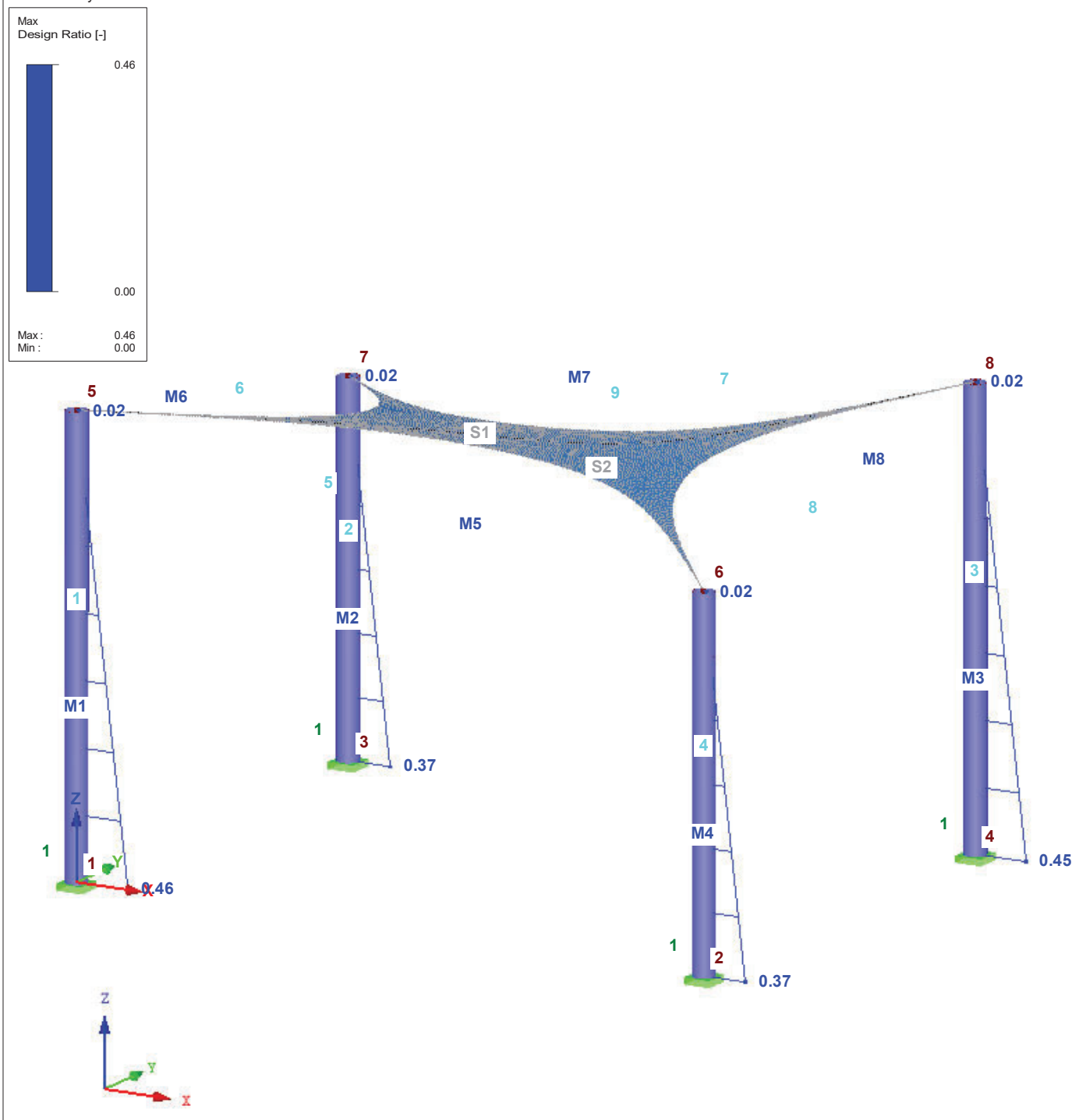

Members Max Design Ratio: 0.46

THE SADLER GROUP
4055 International Plaza, Suite 540
FORT WORTH TX
(817) 332-1074

Project Title:
Engineer:
Project ID:
Project Descr:

General Footing

Project File: Shelter Cove Park - 9888-2.ec6

LIC# : KW-06015008, Build:20.23.2.14 THE SADLER GROUP (c) ENERCALC INC 1983-2022

DESCRIPTION: SPREAD FOOTING C8

Code References

Calculations per ACI 318-14, IBC 2021, CBC 2019, ASCE 7-16
Load Combinations Used : IBC 2021

General Information

Material Properties

f'c : Concrete 28 day strength	=	3.0 ksi
fy : Rebar Yield	=	60.0 ksi
Ec : Concrete Elastic Modulus	=	3,122.0 ksi
Concrete Density	=	145.0 pcf
φ Values Flexure	=	0.90
Shear	=	0.750

Analysis Settings

Min Steel % Bending Reinf.	=	
Min Allow % Temp Reinf.	=	0.00090
Min. Overturning Safety Factor	=	1.0 : 1
Min. Sliding Safety Factor	=	1.0 : 1
Add Ftg Wt for Soil Pressure	:	Yes
Use ftg wt for stability, moments & shears	:	Yes
Add Pedestal Wt for Soil Pressure	:	No
Use Pedestal wt for stability, mom & shear	:	No

Soil Design Values

Allowable Soil Bearing	=	1.50 ksf
Soil Density	=	110.0 pcf
Increase Bearing By Footing Weight	=	Yes
Soil Passive Resistance (for Sliding)	=	250.0 pcf
Soil/Concrete Friction Coeff.	=	0.30

Increases based on footing Depth

Footing base depth below soil surface	=	4.0 ft
Allow press. increase per foot of depth	=	ksf
when footing base is below	=	ft

Increases based on footing plan dimension

Allowable pressure increase per foot of depth	=	ksf
when max. length or width is greater than	=	ft

Dimensions

Width parallel to X-X Axis	=	10.333 ft
Length parallel to Z-Z Axis	=	10.333 ft
Footing Thickness	=	42.0 in

Pedestal dimensions...

px : parallel to X-X Axis	=	in
pz : parallel to Z-Z Axis	=	in
Height	=	in

Rebar Centerline to Edge of Concrete...

at Bottom of footing	=	3.0 in

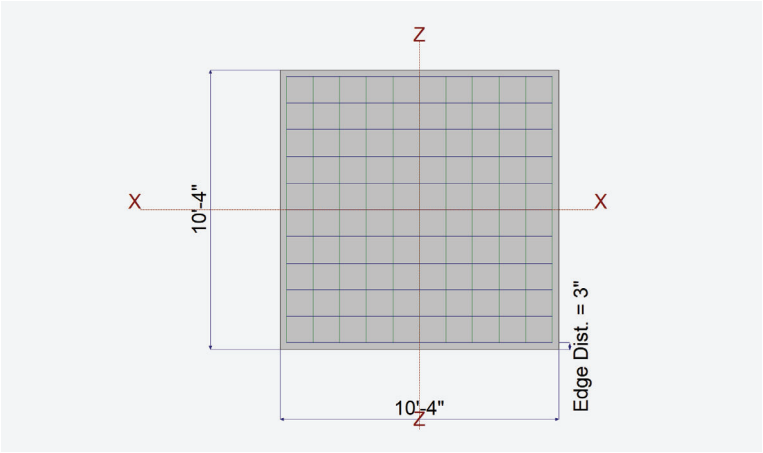

Reinforcing

Bars parallel to X-X Axis		
Number of Bars	=	11.0
Reinforcing Bar Size	=	# 6
Bars parallel to Z-Z Axis		
Number of Bars	=	11.0
Reinforcing Bar Size	=	# 6

Bandwidth Distribution Check (ACI 15.4.4.2)

Direction Requiring Closer Separation n/a
Bars required within zone n/a
Bars required on each side of zone n/a

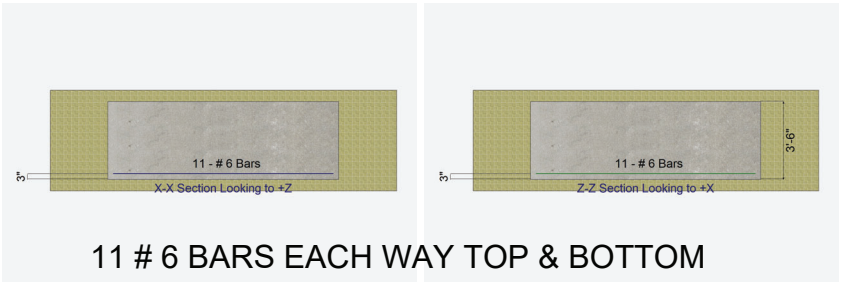

Applied Loads

		D	Lr	L	S	W	E	H	
P : Column Load	=	2.563							k
OB : Overburden	=								ksf
M-xx	=								k-ft
M-zz	=	59.236							k-ft
V-x	=	2.186							k
V-z	=								k

General Footing

DESCRIPTION: SPREAD FOOTING C8

DESIGN SUMMARY

Design OK

	Min. Ratio	Item	Applied	Capacity	Governing Load Combination
PASS	0.4715	Soil Bearing	0.9466 ksf	2.008 ksf	D Only about Z-Z axis
PASS	n/a	Overturning - X-X	0.0 k-ft	0.0 k-ft	No Overturning
PASS	4.837	Overturning - Z-Z	66.887 k-ft	323.535 k-ft	D Only
PASS	17.90	Sliding - X-X	2.186 k	39.130 k	D Only
PASS	n/a	Sliding - Z-Z	0.0 k	0.0 k	No Sliding
PASS	n/a	Uplift	0.0 k	0.0 k	No Uplift
PASS	0.06129	Z Flexure (+X)	4.979 k-ft/ft	81.237 k-ft/ft	+1.40D
PASS	0.05025	Z Flexure (-X)	4.082 k-ft/ft	81.237 k-ft/ft	+1.40D
PASS	0.005521	X Flexure (+Z)	0.4485 k-ft/ft	81.237 k-ft/ft	+1.40D
PASS	0.005521	X Flexure (-Z)	0.4485 k-ft/ft	81.237 k-ft/ft	+1.40D
PASS	0.02278	1-way Shear (+X)	1.871 psi	82.158 psi	+1.40D
PASS	0.01935	1-way Shear (-X)	1.589 psi	82.158 psi	+1.40D
PASS	0.001716	1-way Shear (+Z)	0.1410 psi	82.158 psi	+1.40D
PASS	0.001716	1-way Shear (-Z)	0.1410 psi	82.158 psi	+1.40D
PASS	0.003222	2-way Punching	0.5294 psi	164.317 psi	+1.40D

Detailed Results

Soil Bearing

Rotation Axis & Load Combination...	Gross Allowable	Xecc (in)	Zecc (in)	Actual Soil Bearing Stress @ Location Bottom, -Z	Top, +Z	Left, -X	Right, +X	Actual / Allow Ratio
X-X, D Only	2.008	n/a	0.0	0.5865	0.5865	n/a	n/a	0.292
X-X, +0.60D	2.008	n/a	0.0	0.3519	0.3519	n/a	n/a	0.175
Z-Z, D Only	2.008	12.817	n/a	n/a	n/a	0.2264	0.9466	0.472
Z-Z, +0.60D	2.008	12.817	n/a	n/a	n/a	0.1358	0.5680	0.283

Overturning Stability

Rotation Axis & Load Combination...	Overturning Moment	Resisting Moment	Stability Ratio	Status
X-X, D Only	None	0.0 k-ft	Infinity	OK
X-X, +0.60D	None	0.0 k-ft	Infinity	OK
Z-Z, D Only	66.887 k-ft	323.535 k-ft	4.837	OK
Z-Z, +0.60D	40.132 k-ft	194.121 k-ft	4.837	OK

All units k

Sliding Stability

Force Application Axis Load Combination...	Sliding Force	Resisting Force	Stability Ratio	Status
X-X, D Only	2.186 k	39.130 k	17.90	OK
X-X, +0.60D	1.312 k	31.615 k	24.104	OK
Z-Z, D Only	0.0 k	39.130 k	No Sliding	OK
Z-Z, +0.60D	0.0 k	31.615 k	No Sliding	OK

THE SADLER GROUP
4055 International Plaza, Suite 540
FORT WORTH TX
(817) 332-1074

Project Title:
Engineer:
Project ID:
Project Descr:

General Footing

Project File: Shelter Cove Park - 9888-2.ec6

LIC# : KW-06015008, Build:20.23.2.14 THE SADLER GROUP (c) ENERCALC INC 1983-2022

DESCRIPTION: SPREAD FOOTING C9

Code References

Calculations per ACI 318-14, IBC 2021, CBC 2019, ASCE 7-16
Load Combinations Used : IBC 2021

General Information

Material Properties

f'c : Concrete 28 day strength	=	3.0	ksi
fy : Rebar Yield	=	60.0	ksi
Ec : Concrete Elastic Modulus	=	3,122.0	ksi
Concrete Density	=	145.0	pcf
φ Values Flexure	=	0.90	
Shear	=	0.750	

Analysis Settings

Min Steel % Bending Reinf.	=	
Min Allow % Temp Reinf.	=	0.00090
Min. Overturning Safety Factor	=	1.0 : 1
Min. Sliding Safety Factor	=	1.0 : 1
Add Ftg Wt for Soil Pressure	:	Yes
Use ftg wt for stability, moments & shears	:	Yes
Add Pedestal Wt for Soil Pressure	:	No
Use Pedestal wt for stability, mom & shear	:	No

Soil Design Values

Allowable Soil Bearing	=	1.50	ksf
Soil Density	=	110.0	pcf
Increase Bearing By Footing Weight	=	Yes	
Soil Passive Resistance (for Sliding)	=	250.0	pcf
Soil/Concrete Friction Coeff.	=	0.30	

Increases based on footing Depth

Footing base depth below soil surface	=	4.0	ft
Allow press. increase per foot of depth	=		ksf
when footing base is below	=		ft

Increases based on footing plan dimension

Allowable pressure increase per foot of depth	=		ksf
when max. length or width is greater than	=		ft

Dimensions

Width parallel to X-X Axis	=	8.833	ft
Length parallel to Z-Z Axis	=	8.833	ft
Footing Thickness	=	42.0	in

Pedestal dimensions...

px : parallel to X-X Axis	=		in
pz : parallel to Z-Z Axis	=		in
Height	=		in

Rebar Centerline to Edge of Concrete...

at Bottom of footing	=	3.0	in

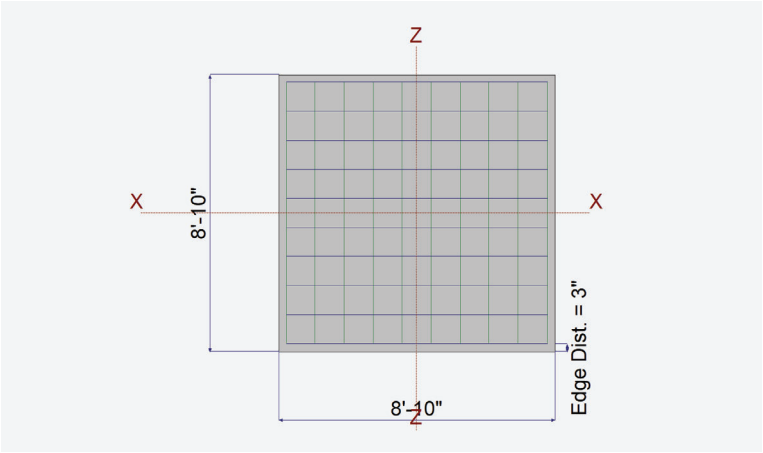

Reinforcing

Bars parallel to X-X Axis			
Number of Bars	=		10.0
Reinforcing Bar Size	=	#	6
Bars parallel to Z-Z Axis			
Number of Bars	=		10.0
Reinforcing Bar Size	=	#	6

Bandwidth Distribution Check (ACI 15.4.4.2)

Direction Requiring Closer Separation n/a

# Bars required within zone	n/a
# Bars required on each side of zone	n/a

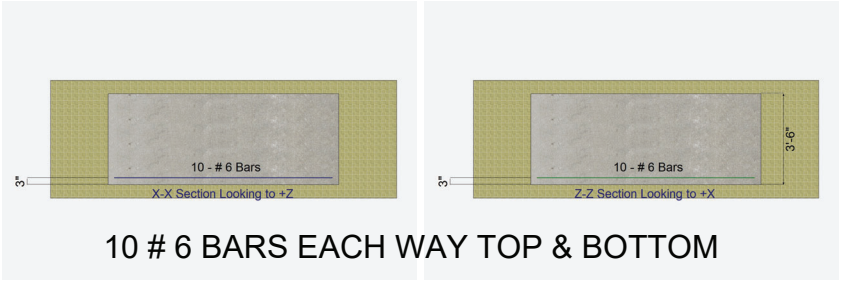

Applied Loads

		D	Lr	L	S	W	E	H	
P : Column Load	=	1.517							k
OB : Overburden	=								ksf
M-xx	=								k-ft
M-zz	=	47.597							k-ft
V-x	=	2.165							k
V-z	=								k

General Footing

Project File: Shelter Cove Park - 9888-2.ec6

LIC# : KW-06015008, Build:20.23.2.14 THE SADLER GROUP (c) ENERCALC INC 1983-2022

DESCRIPTION: SPREAD FOOTING C9

DESIGN SUMMARY

Design OK

	Min. Ratio	Item	Applied	Capacity	Governing Load Combination
PASS	0.5270	Soil Bearing	1.058 ksf	2.008 ksf	D Only about Z-Z axis
PASS	n/a	Overturning - X-X	0.0 k-ft	0.0 k-ft	No Overturning
PASS	3.634	Overturning - Z-Z	55.175 k-ft	200.528 k-ft	D Only
PASS	14.324	Sliding - X-X	2.165 k	31.011 k	D Only
PASS	n/a	Sliding - Z-Z	0.0 k	0.0 k	No Sliding
PASS	n/a	Uplift	0.0 k	0.0 k	No Uplift
PASS	0.05372	Z Flexure (+X)	4.638 k-ft/ft	86.327 k-ft/ft	+1.40D
PASS	0.04757	Z Flexure (-X)	4.107 k-ft/ft	86.327 k-ft/ft	+1.40D
PASS	0.003075	X Flexure (+Z)	0.2655 k-ft/ft	86.327 k-ft/ft	+1.40D
PASS	0.003075	X Flexure (-Z)	0.2655 k-ft/ft	86.327 k-ft/ft	+1.40D
PASS	0.01829	1-way Shear (+X)	1.502 psi	82.158 psi	+1.40D
PASS	0.01666	1-way Shear (-X)	1.369 psi	82.158 psi	+1.40D
PASS	0.000813	1-way Shear (+Z)	0.06679 psi	82.158 psi	+1.40D
PASS	0.000813	1-way Shear (-Z)	0.06679 psi	82.158 psi	+1.40D
PASS	0.001849	2-way Punching	0.3038 psi	164.317 psi	+1.40D

Detailed Results

Soil Bearing

Rotation Axis & Load Combination...	Gross Allowable	Xecc (in)	Zecc (in)	Actual Soil Bearing Stress @ Location Bottom, -Z	Top, +Z	Left, -X	Right, +X	Actual / Allow Ratio
X-X, D Only	2.008	n/a	0.0	0.5819	0.5819	n/a	n/a	0.290
X-X, +0.60D	2.008	n/a	0.0	0.3492	0.3492	n/a	n/a	0.174
Z-Z, D Only	2.008	14.582	n/a	n/a	n/a	0.1064	1.058	0.527
Z-Z, +0.60D	2.008	14.582	n/a	n/a	n/a	0.06383	0.6345	0.316

Overturning Stability

Rotation Axis & Load Combination...	Overturning Moment	Resisting Moment	Stability Ratio	Status
X-X, D Only	None	0.0 k-ft	Infinity	OK
X-X, +0.60D	None	0.0 k-ft	Infinity	OK
Z-Z, D Only	55.175 k-ft	200.528 k-ft	3.634	OK
Z-Z, +0.60D	33.105 k-ft	120.317 k-ft	3.634	OK

All units k

Sliding Stability

Force Application Axis Load Combination...	Sliding Force	Resisting Force	Stability Ratio	Status
X-X, D Only	2.165 k	31.011 k	14.324	OK
X-X, +0.60D	1.299 k	25.563 k	19.679	OK
Z-Z, D Only	0.0 k	31.011 k	No Sliding	OK
Z-Z, +0.60D	0.0 k	25.563 k	No Sliding	OK

THE SADLER GROUP
4055 International Plaza, Suite 540
FORT WORTH TX
(817) 332-1074

Project Title:
Engineer:
Project ID:
Project Descr:

General Footing

Project File: Shelter Cove Park - 9888-2.ec6

LIC# : KW-06015008, Build:20.23.2.14 THE SADLER GROUP (c) ENERCALC INC 1983-2022

DESCRIPTION: SPREAD FOOTING C10

Code References

Calculations per ACI 318-14, IBC 2021, CBC 2019, ASCE 7-16
Load Combinations Used : IBC 2021

General Information

Material Properties

f'c : Concrete 28 day strength	=	3.0 ksi
fy : Rebar Yield	=	60.0 ksi
Ec : Concrete Elastic Modulus	=	3,122.0 ksi
Concrete Density	=	145.0 pcf
φ Values Flexure	=	0.90
Shear	=	0.750

Analysis Settings

Min Steel % Bending Reinf.	=	
Min Allow % Temp Reinf.	=	0.00090
Min. Overturning Safety Factor	=	1.0 : 1
Min. Sliding Safety Factor	=	1.0 : 1
Add Ftg Wt for Soil Pressure	:	Yes
Use ftg wt for stability, moments & shears	:	Yes
Add Pedestal Wt for Soil Pressure	:	No
Use Pedestal wt for stability, mom & shear	:	No

Soil Design Values

Allowable Soil Bearing	=	1.50 ksf
Soil Density	=	110.0 pcf
Increase Bearing By Footing Weight	=	Yes
Soil Passive Resistance (for Sliding)	=	250.0 pcf
Soil/Concrete Friction Coeff.	=	0.30

Increases based on footing Depth

Footing base depth below soil surface	=	4.0 ft
Allow press. increase per foot of depth	=	ksf
when footing base is below	=	ft

Increases based on footing plan dimension

Allowable pressure increase per foot of depth	=	ksf
when max. length or width is greater than	=	ft

Dimensions

Width parallel to X-X Axis	=	10.333 ft
Length parallel to Z-Z Axis	=	10.333 ft
Footing Thickness	=	42.0 in

Pedestal dimensions...

px : parallel to X-X Axis	=	in
pz : parallel to Z-Z Axis	=	in
Height	=	in

Rebar Centerline to Edge of Concrete...

at Bottom of footing	=	3.0 in

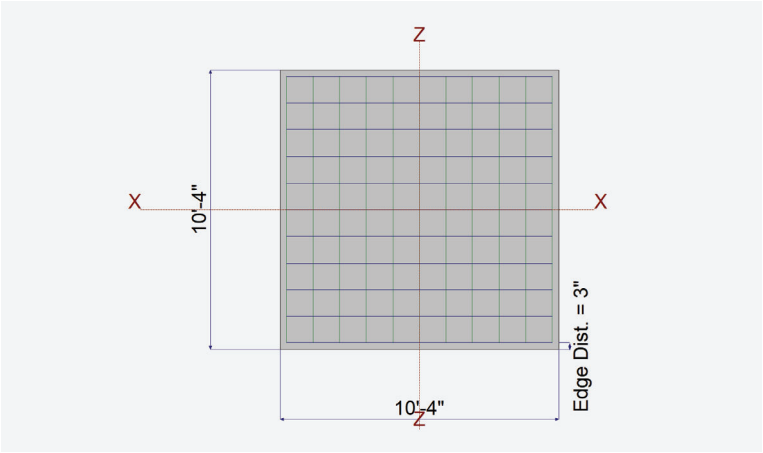

Reinforcing

Bars parallel to X-X Axis		
Number of Bars	=	11.0
Reinforcing Bar Size	=	# 6
Bars parallel to Z-Z Axis		
Number of Bars	=	11.0
Reinforcing Bar Size	=	# 6

Bandwidth Distribution Check (ACI 15.4.4.2)

Direction Requiring Closer Separation n/a

# Bars required within zone	n/a
# Bars required on each side of zone	n/a

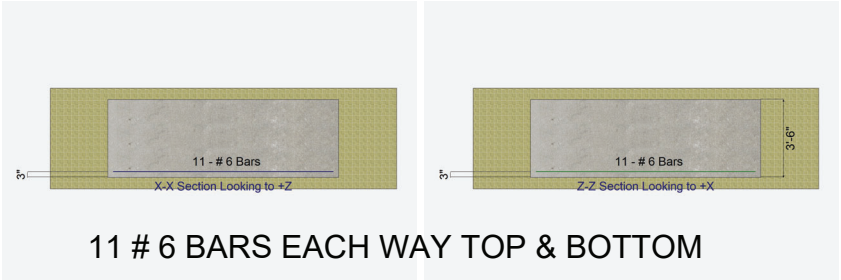

11 # 6 BARS EACH WAY TOP & BOTTOM

Applied Loads

		D	Lr	L	S	W	E	H	
P : Column Load	=	2.436							k
OB : Overburden	=								ksf
M-xx	=								k-ft
M-zz	=	58.354							k-ft
V-x	=	2.154							k
V-z	=								k

General Footing

Project File: Shelter Cove Park - 9888-2.ec6

LIC# : KW-06015008, Build:20.23.2.14 THE SADLER GROUP (c) ENERCALC INC 1983-2022

DESCRIPTION: SPREAD FOOTING C10

DESIGN SUMMARY

Design OK

	Min. Ratio	Item	Applied	Capacity	Governing Load Combination
PASS	0.4683	Soil Bearing	0.9401 ksf	2.008 ksf	D Only about Z-Z axis
PASS	n/a	Overturning - X-X	0.0 k-ft	0.0 k-ft	No Overturning
PASS	4.90	Overturning - Z-Z	65.893 k-ft	322.878 k-ft	D Only
PASS	18.148	Sliding - X-X	2.154 k	39.091 k	D Only
PASS	n/a	Sliding - Z-Z	0.0 k	0.0 k	No Sliding
PASS	n/a	Uplift	0.0 k	0.0 k	No Uplift
PASS	0.06019	Z Flexure (+X)	4.890 k-ft/ft	81.237 k-ft/ft	+1.40D
PASS	0.04970	Z Flexure (-X)	4.037 k-ft/ft	81.237 k-ft/ft	+1.40D
PASS	0.005248	X Flexure (+Z)	0.4263 k-ft/ft	81.237 k-ft/ft	+1.40D
PASS	0.005248	X Flexure (-Z)	0.4263 k-ft/ft	81.237 k-ft/ft	+1.40D
PASS	0.02238	1-way Shear (+X)	1.839 psi	82.158 psi	+1.40D
PASS	0.01912	1-way Shear (-X)	1.571 psi	82.158 psi	+1.40D
PASS	0.001631	1-way Shear (+Z)	0.1340 psi	82.158 psi	+1.40D
PASS	0.001631	1-way Shear (-Z)	0.1340 psi	82.158 psi	+1.40D
PASS	0.003062	2-way Punching	0.5032 psi	164.317 psi	+1.40D

Detailed Results

Soil Bearing

Rotation Axis & Load Combination...	Gross Allowable	Xecc (in)	Zecc (in)	Actual Soil Bearing Stress @ Location Bottom, -Z	Top, +Z	Left, -X	Right, +X	Actual / Allow Ratio
X-X, D Only	2.008	n/a	0.0	0.5853	0.5853	n/a	n/a	0.292
X-X, +0.60D	2.008	n/a	0.0	0.3512	0.3512	n/a	n/a	0.175
Z-Z, D Only	2.008	12.653	n/a	n/a	n/a	0.2305	0.9401	0.468
Z-Z, +0.60D	2.008	12.653	n/a	n/a	n/a	0.1383	0.5641	0.281

Overturning Stability

Rotation Axis & Load Combination...	Overturning Moment	Resisting Moment	Stability Ratio	Status
X-X, D Only	None	0.0 k-ft	Infinity	OK
X-X, +0.60D	None	0.0 k-ft	Infinity	OK
Z-Z, D Only	65.893 k-ft	322.878 k-ft	4.90	OK
Z-Z, +0.60D	39.536 k-ft	193.727 k-ft	4.90	OK

All units k

Sliding Stability

Force Application Axis Load Combination...	Sliding Force	Resisting Force	Stability Ratio	Status
X-X, D Only	2.154 k	39.091 k	18.148	OK
X-X, +0.60D	1.292 k	31.592 k	24.445	OK
Z-Z, D Only	0.0 k	39.091 k	No Sliding	OK
Z-Z, +0.60D	0.0 k	31.592 k	No Sliding	OK

THE SADLER GROUP
4055 International Plaza, Suite 540
FORT WORTH TX
(817) 332-1074

Project Title:
Engineer:
Project ID:
Project Descr:

General Footing

Project File: Shelter Cove Park - 9888-2.ec6

LIC# : KW-06015008, Build:20.23.2.14 THE SADLER GROUP (c) ENERCALC INC 1983-2022

DESCRIPTION: SPREAD FOOTING C11

Code References

Calculations per ACI 318-14, IBC 2021, CBC 2019, ASCE 7-16
Load Combinations Used : IBC 2021

General Information

Material Properties

f'c : Concrete 28 day strength	=	3.0 ksi
fy : Rebar Yield	=	60.0 ksi
Ec : Concrete Elastic Modulus	=	3,122.0 ksi
Concrete Density	=	145.0 pcf
φ Values Flexure	=	0.90
Shear	=	0.750

Analysis Settings

Min Steel % Bending Reinf.	=	
Min Allow % Temp Reinf.	=	0.00090
Min. Overturning Safety Factor	=	1.0 : 1
Min. Sliding Safety Factor	=	1.0 : 1
Add Ftg Wt for Soil Pressure	:	Yes
Use ftg wt for stability, moments & shears	:	Yes
Add Pedestal Wt for Soil Pressure	:	No
Use Pedestal wt for stability, mom & shear	:	No

Soil Design Values

Allowable Soil Bearing	=	1.50 ksf
Soil Density	=	110.0 pcf
Increase Bearing By Footing Weight	=	Yes
Soil Passive Resistance (for Sliding)	=	250.0 pcf
Soil/Concrete Friction Coeff.	=	0.30

Increases based on footing Depth

Footing base depth below soil surface	=	4.0 ft
Allow press. increase per foot of depth	=	ksf
when footing base is below	=	ft

Increases based on footing plan dimension

Allowable pressure increase per foot of depth	=	ksf
when max. length or width is greater than	=	ft

Dimensions

Width parallel to X-X Axis	=	8.833 ft
Length parallel to Z-Z Axis	=	8.833 ft
Footing Thickness	=	42.0 in

Pedestal dimensions...

px : parallel to X-X Axis	=	in
pz : parallel to Z-Z Axis	=	in
Height	=	in

Rebar Centerline to Edge of Concrete...

at Bottom of footing	=	3.0 in

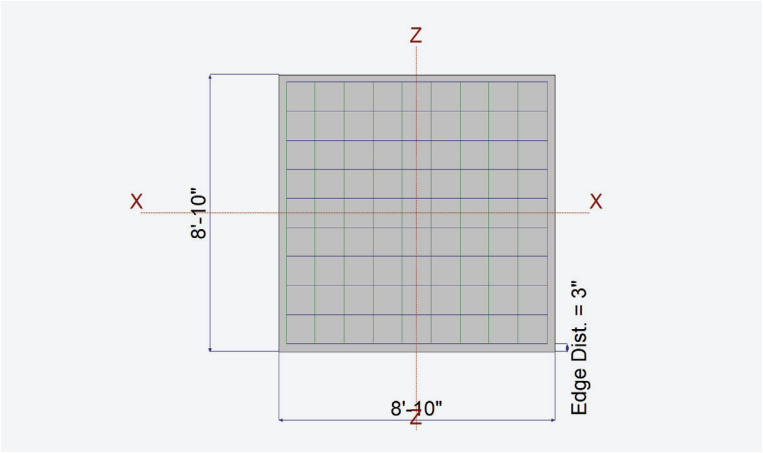

Reinforcing

Bars parallel to X-X Axis		
Number of Bars	=	10.0
Reinforcing Bar Size	=	# 6
Bars parallel to Z-Z Axis		
Number of Bars	=	10.0
Reinforcing Bar Size	=	# 6

Bandwidth Distribution Check (ACI 15.4.4.2)

Direction Requiring Closer Separation n/a
Bars required within zone n/a
Bars required on each side of zone n/a

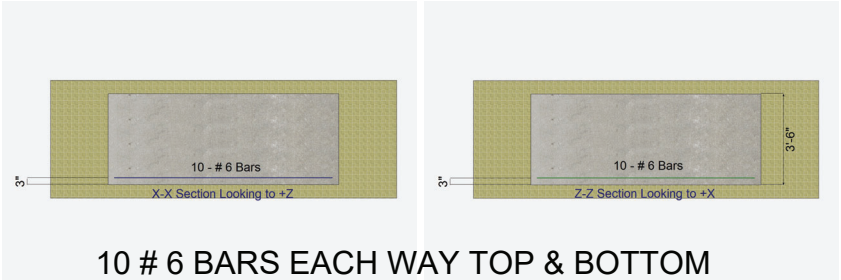

10 # 6 BARS EACH WAY TOP & BOTTOM

Applied Loads

		D	Lr	L	S	W	E	H	
P : Column Load	=	1.381							k
OB : Overburden	=								ksf
M-xx	=								k-ft
M-zz	=	47.940							k-ft
V-x	=	2.180							k
V-z	=								k

General Footing

Project File: Shelter Cove Park - 9888-2.ec6

LIC# : KW-06015008, Build:20.23.2.14 THE SADLER GROUP (c) ENERCALC INC 1983-2022

DESCRIPTION: SPREAD FOOTING C11

DESIGN SUMMARY

Design OK

	Min. Ratio	Item	Applied	Capacity	Governing Load Combination
PASS	0.5275	Soil Bearing	1.059 ksf	2.008 ksf	D Only about Z-Z axis
PASS	n/a	Overturning - X-X	0.0 k-ft	0.0 k-ft	No Overturning
PASS	3.598	Overturning - Z-Z	55.570 k-ft	199.928 k-ft	D Only
PASS	14.207	Sliding - X-X	2.180 k	30.970 k	D Only
PASS	n/a	Sliding - Z-Z	0.0 k	0.0 k	No Sliding
PASS	n/a	Uplift	0.0 k	0.0 k	No Uplift
PASS	0.05381	Z Flexure (+X)	4.645 k-ft/ft	86.327 k-ft/ft	+1.40D
PASS	0.04821	Z Flexure (-X)	4.162 k-ft/ft	86.327 k-ft/ft	+1.40D
PASS	0.00280	X Flexure (+Z)	0.2417 k-ft/ft	86.327 k-ft/ft	+1.40D
PASS	0.00280	X Flexure (-Z)	0.2417 k-ft/ft	86.327 k-ft/ft	+1.40D
PASS	0.01834	1-way Shear (+X)	1.507 psi	82.158 psi	+1.40D
PASS	0.01686	1-way Shear (-X)	1.385 psi	82.158 psi	+1.40D
PASS	0.000740	1-way Shear (+Z)	0.06080 psi	82.158 psi	+1.40D
PASS	0.000740	1-way Shear (-Z)	0.06080 psi	82.158 psi	+1.40D
PASS	0.001683	2-way Punching	0.2766 psi	164.317 psi	+1.40D

Detailed Results

Soil Bearing

Rotation Axis & Load Combination...	Gross Allowable	Xecc (in)	Zecc (in)	Actual Soil Bearing Stress @ Location Bottom, -Z	Top, +Z	Left, -X	Right, +X	Actual / Allow Ratio
X-X, D Only	2.008	n/a	0.0	0.5802	0.5802	n/a	n/a	0.289
X-X, +0.60D	2.008	n/a	0.0	0.3481	0.3481	n/a	n/a	0.173
Z-Z, D Only	2.008	14.731	n/a	n/a	n/a	0.1012	1.059	0.528
Z-Z, +0.60D	2.008	14.731	n/a	n/a	n/a	0.06074	0.6355	0.317

Overturning Stability

Rotation Axis & Load Combination...	Overturning Moment	Resisting Moment	Stability Ratio	Status
X-X, D Only	None	0.0 k-ft	Infinity	OK
X-X, +0.60D	None	0.0 k-ft	Infinity	OK
Z-Z, D Only	55.570 k-ft	199.928 k-ft	3.598	OK
Z-Z, +0.60D	33.342 k-ft	119.957 k-ft	3.598	OK

All units k

Sliding Stability

Force Application Axis Load Combination...	Sliding Force	Resisting Force	Stability Ratio	Status
X-X, D Only	2.180 k	30.970 k	14.207	OK
X-X, +0.60D	1.308 k	25.538 k	19.525	OK
Z-Z, D Only	0.0 k	30.970 k	No Sliding	OK
Z-Z, +0.60D	0.0 k	25.538 k	No Sliding	OK

THE SADLER GROUP
4055 International Plaza, Suite 540
FORT WORTH TX
(817) 332-1074

Project Title:
Engineer:
Project ID:
Project Descr:

Steel Base Plate by FEM

Project File: Shelter Cove Park - 9888-2.ec6

LIC# : KW-06015008, Build:20.23.2.14 THE SADLER GROUP (c) ENERCALC INC 1983-2022

DESCRIPTION: BASEPLATE

Code References

Calculations per AISC Design Guide # 1, IBC 2021, CBC 2019, ASCE 7-16, AISC 360-16
Load Combination Set : IBC 2021

General Information

Material Properties

AISC Design Method	Allowable Strength Design			
Steel Plate Fy	=	36 ksi		
Concrete Support f'c	=	3 ksi	Ω c : ASD Safety Factor	2.310
			Nominal Bearing Fp per J8	2.550 ksi

Column, Plate & Pedestal

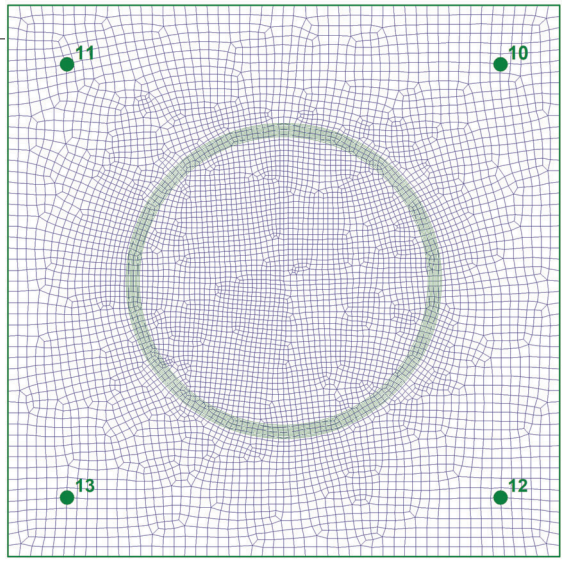

Column Properties

Steel Section	HSS 16x0.375		
Depth	16 in	Area	17.2 in^2
Width	16 in	Ixx	526 in^4
Flange Thickness	0.349 in	Iyy	526 in^4
Web Thicknes	in		

Column Rotation & Offset

Column Rotation	0 deg
Offset from "X" Plate Center	in
Offset from "Z" Plate Center	in

Plate Dimensions

N : Length	28.0 in
B : Width	28.0 in
Thickness	1.50 in

Column fully welded to base plate.

Support Dimensions

Width along "X"	28.0 in
Length along "Z'	28.0 in

Applied Loads

	P-Y	V-X	V-Z	M-X	M-Z
D : Dead Load	2.563 k	2.186 k	k	59.236 k-ft	k-ft
L : Live	k	k	k	k-ft	k-ft
Lr : Roof Live	k	k	k	k-ft	k-ft
S : Snow	k	k	k	k-ft	k-ft
W : Wind	k	k	k	k-ft	k-ft
E : Earthquake	k	k	k	k-ft	k-ft
H : Lateral Earth	k	k	k	k-ft	k-ft

" P " = Gravity load, "+" sign is downward "+" Moments create higher soil pressure at +Z ed
"+" Shears push plate towards +Z edge

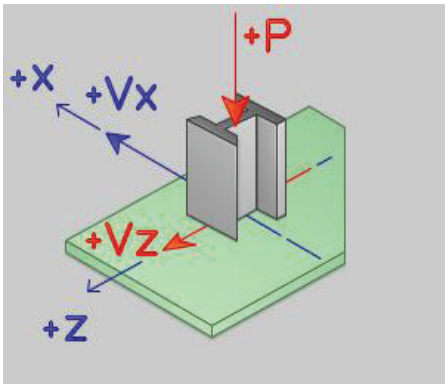

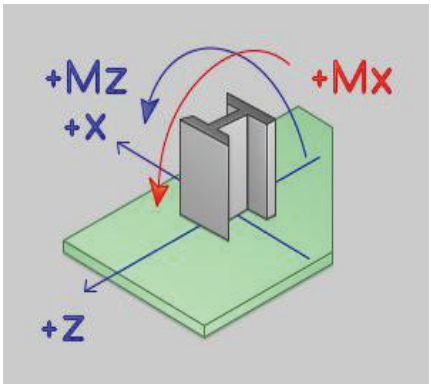

Steel Base Plate by FEM

Project File: Shelter Cove Park - 9888-2.ec6

LIC# : KW-06015008, Build:20.23.2.14 THE SADLER GROUP (c) ENERCALC INC 1983-2022

DESCRIPTION: BASEPLATE

Anchors

Anchor Diameter	1.5	in	Tension Cap. in Concrete	63.617	k	Phi:	0.70
Anchor Length	36.0	in	Steel Strength in Tension	60.0	ksi	Phi:	0.75
			Shear Cap. in Concrete	38.170	k	Phi:	0.70
					ksi	Phi:	0.65

Anchor Bolt Placements

Number of Anchors 2

X,Z Datum @ Center of Plate	X	Z		Add Anchor Symmetric about X	Add Anchor Symmetric about Z
# 1	11.0	11.0 in	# 2	11.0	-11.0 in	☒	☐

Governing Conditions

Design Method
Governing Stress Ratio **0.415**
Design Plate Size

Bending Stress Ratio **0.415**

fb : Max. Bending Stress	0.00	ksi	Location from Plate Center:			
Fb : Allowable	0.00	ksi	X:	1.075 in	Z:	8.175 in

Plate Bearing Stress Ratio **0.371**

fu : Max. Bearing Stress	0.00	ksi	Location from Plate Center:			
Fp : Allowable	0.00	ksi	X:	0.256 in	Z:	-13.739 in

Bolt Tension Stress Ratio **0.346**

D Only

Maximum Bolt Tension	15.42	k	Location from Plate Center:			
Allowable Tension/Pullout		k	X:	11.000 in	Z:	-11.000 in

THE SADLER GROUP
4055 International Plaza, Suite 540
FORT WORTH TX
(817) 332-1074

Project Title:
Engineer:
Project ID:
Project Descr:

Steel Base Plate by FEM

LIC# : KW-06015008, Build:20.23.2.14 THE SADLER GROUP (c) ENERCALC INC 1983-2022

DESCRIPTION: BASEPLATE

Generated Mesh

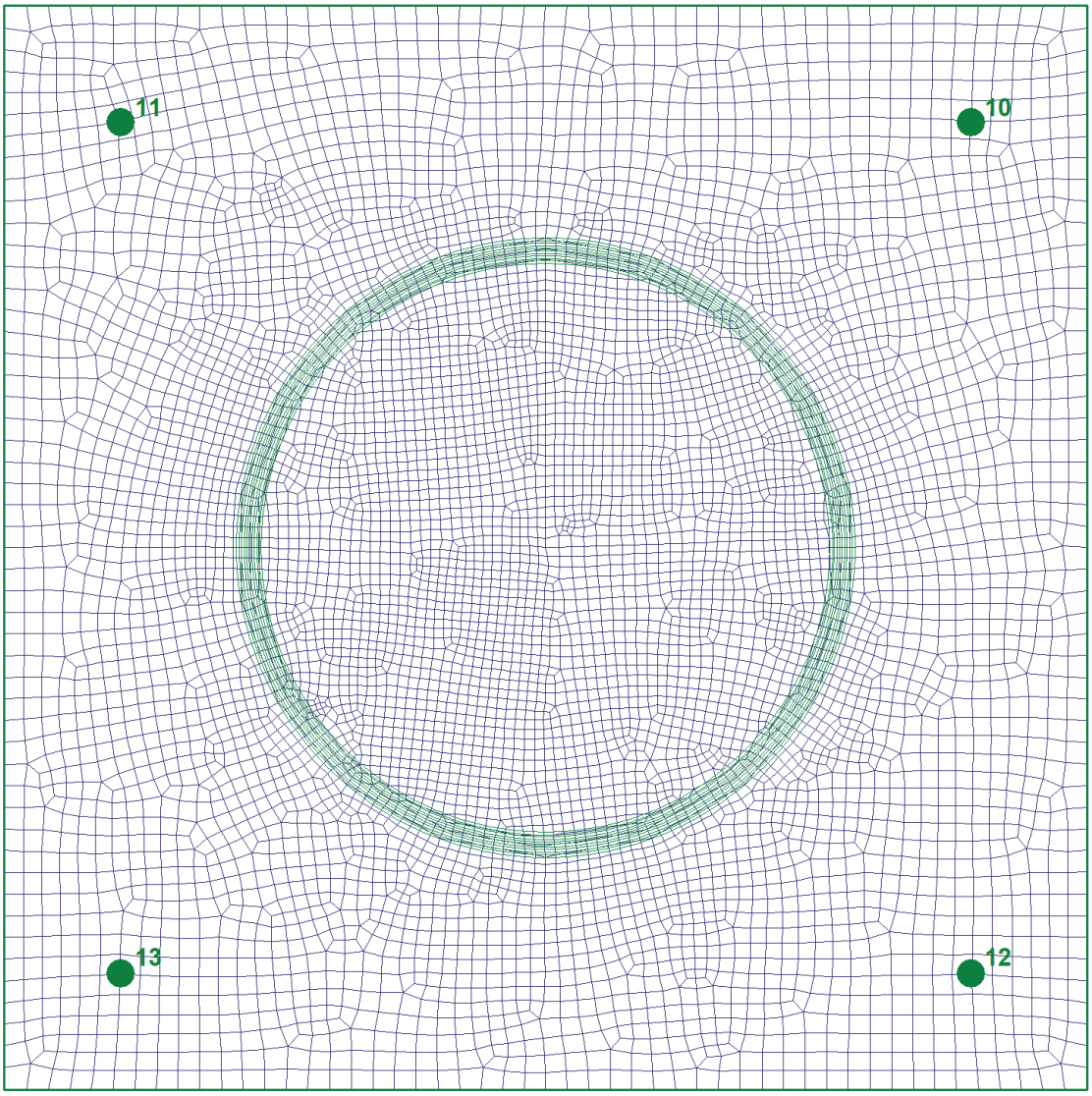

Steel Base Plate by FEM

DESCRIPTION: BASEPLATE

Maximum Bending Stress from all Load Combinations

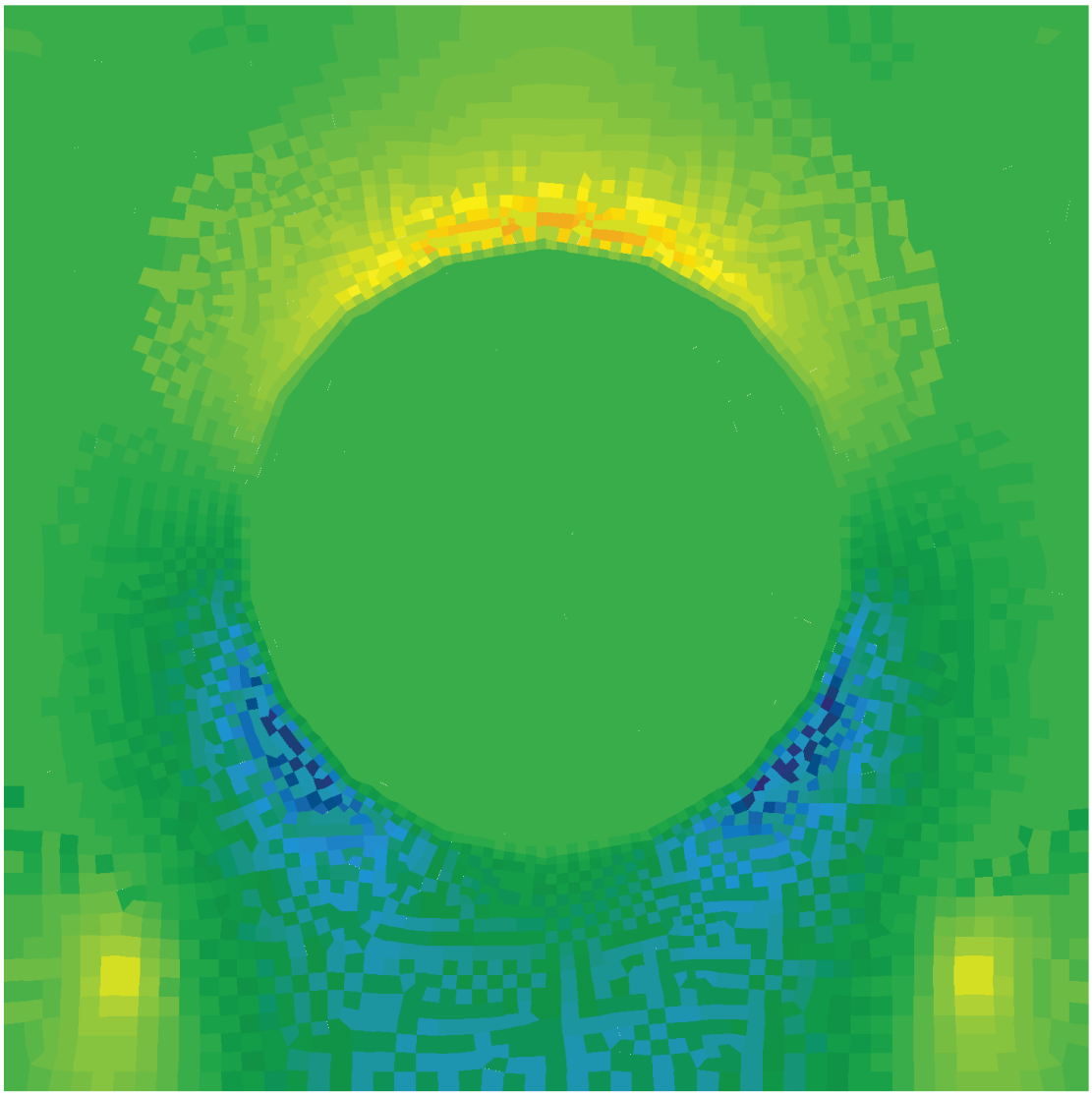

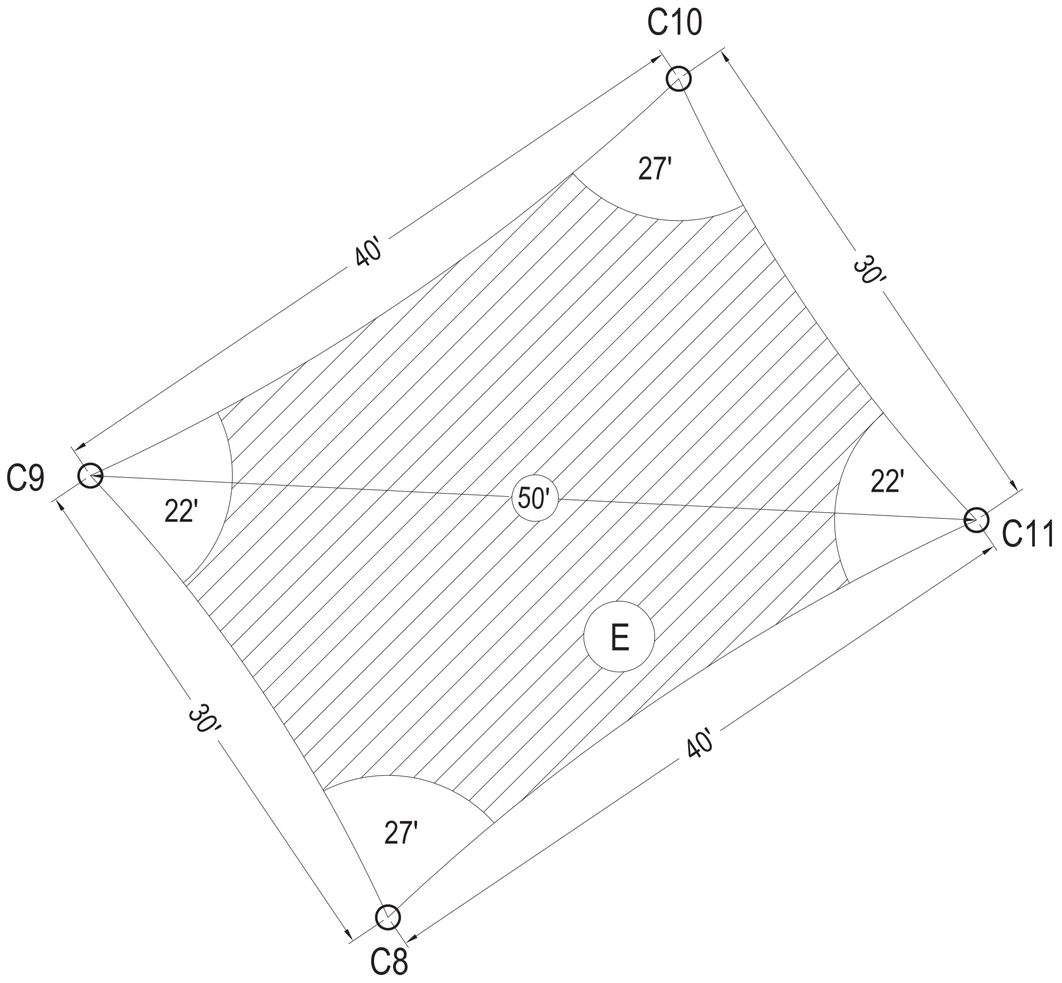

5/16" DIA. STAINLESS STEEL CABLE AROUND PERIMETER OF MATERIAL

1 PLAN VIEW

NOTE: NUMBERS IN CORNERS OF FABRIC INDICATE SAIL ATTACHMENT POINT HEIGHTS

IMPORTANT - PLEASE NOTE:
CENTER-TO-CENTER MEASUREMENTS FOR COLUMN LAYOUT ABOVE MUST BE MAINTAINED PRECISELY AS SHOWN. AS SAIL COLUMN LOCATIONS SHOWN ALLOW LESS THAN 1" OF TOLERANCE, ANY GREATER INSTALLED VARIANCE MAY CAUSE YOUR FABRIC CANOPY TO NOT FIT AS DESIGNED. A LOOSE OR POORLY FITTING CANOPY CAN BE SUSCEPTIBLE TO DAMAGES WHICH WILL NOT BE COVERED UNDER WARRANTY. PLEASE NOTIFY SHADE SYSTEMS IMMEDIATELY IF COLUMN LOCATIONS VARY MORE THAN 1" FROM THE MEASUREMENTS SHOWN ON THIS PLAN.

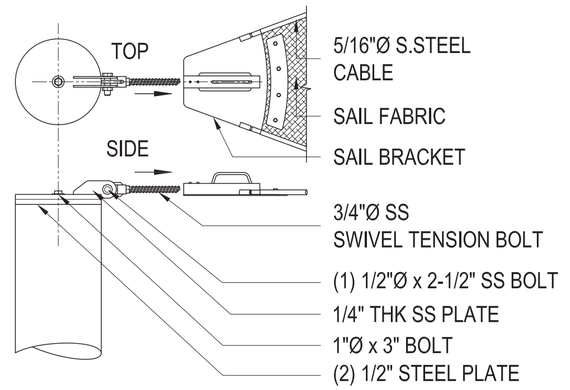

3 SAIL TOP CORNER DETAIL

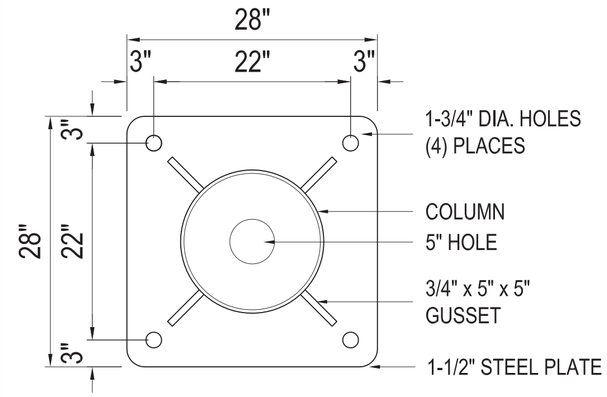

B BASE PLATE C8/C9/C10/C11

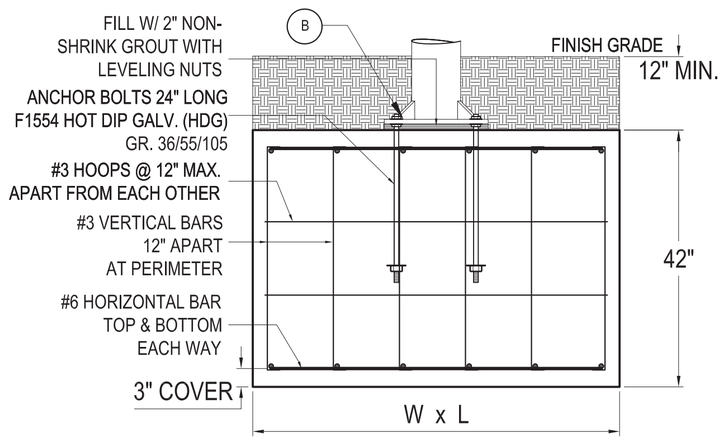

2 FOOTING DETAIL

NOTE: GROUT, HOOPS, REBARS & ANCHOR BOLTS NOT SUPPLIED BY FACTORY

	STEEL COLUMN	FOOTER W x L	ANCHOR BOLT SIZE	NUMBER OF HORIZONTAL REBARS EACH WAY
C8	16" DIA. X .375" WALL	124" X 124"	1-1/2"Ø	11
C9	16" DIA. X .375" WALL	106" X 106"	1-1/2"Ø	10
C10	16" DIA. X .375" WALL	124" X 124"	1-1/2"Ø	11
C11	16" DIA. X .375" WALL	106" X 106"	1-1/2"Ø	10

GENERAL NOTES

1- THE SHADE SYSTEMS, INC.™ STRUCTURE HAS BEEN DESIGNED IN ACCORDANCE WITH THE 2018 IBC CODES ALONG WITH ANY ADOPTED STATE BUILDING CODES AND ASCE 7-16 TO THE FOLLOWING DESIGN CRITERIA:

	STRUCTURE WITH FABRIC CANOPY REMOVED
CATEGORY	II
EXPOSURE	C
BASIC WIND SPEED WITHOUT FABRIC	141 MPH
BASIC WIND SPEED WITH FABRIC	115 MPH

2- THE FOUNDATION ASSUMES SOIL CLASS MATERIAL 5, VERTICAL FOUNDATION PRESSURE 1500 PSF, LATERAL BEARING PRESSURE 100 PSF/FT. [PER IBC, TABLE 1806.2]

3- ALL FASTENERS SHALL BE STAINLESS STEEL.

4- ALL BOLTS MUST BE SNUG TIGHT. THE SNUG TIGHTENED CONDITION IS THE TIGHTNESS THAT IS ATTAINED WITH THE FULL EFFORT OF A TYPICAL WORKER USING AN ORDINARY SPUD WRENCH TO BRING THE PLIES INTO FIRM CONTACT. SNUG TIGHT IS THE CONDITION THAT EXISTS WHEN ALL THE PLIES IN A CONNECTION HAVE BEEN PULLED INTO FIRM CONTACT BY THE BOLTS IN THE JOINT AND ALL THE BOLTS IN THE JOINT HAVE BEEN TIGHTENED SUFFICIENTLY TO PREVENT THE REMOVAL OF THE NUTS WITHOUT THE USE OF A WRENCH.

5- FABRIC MAY NOT WITHSTAND WINDS IN EXCESS OF 90 MPH AND THEREFORE IT SHALL BE RELEASED.

STEEL:

1- GALV. STEEL TUBES MIN Fy=50KSI. STEEL ROUND PIPE SHALL BE ASTM A53 GRADE B. STEEL HSS ROUND AND HSS RECTANGULAR SHALL BE ASTM A500 GRADE B. STEEL PLATE SHALL CONFORM WITH ASTM A36.

2- ALL PARTS SHALL BE FACTORY-WELDED TO AMERICAN WELDING SOCIETY (AWS) SPECIFICATIONS AND SHALL UTILIZE E70-S6 AND HAVE THE HIGHEST STANDARDS OF QUALITY WORKMANSHIP.

3- ALL WELDS SHALL BE FILLET WELDS WITH MAXIMUM PERMISSABLE THROAT THICKNESS OR FULL PENETRATION GROOVE WELDS.

CONCRETE:

1- ALL CONCRETE SHALL BE MIXED AND PLACED IN ACCORDANCE WITH THE LATEST EDITION OF ACI 301 AND 318.

2- CONCRETE SHALL HAVE A MINIMUM 28 DAY COMPRESSIVE STRENGTH (f'c) OF 3000 PSI. A CONCRETE MIX HAVING A LISTED STRENGTH OF AT LEAST 3000 PSI THAT IS MIXED IN ACCORDANCE WITH THE MANUFACTURER'S RECOMMENDATIONS IS ACCEPTABLE FOR USE.

3- REINFORCING STEEL SHALL BE ASTM A-615 GRADE 60 WITH A MINIMUM YIELD STRENGTH (fy) OF 60 KSI.

4- UNLESS OTHERWISE SHOWN, CONCRETE COVER SHALL BE 3" (MIN).

THIS DOCUMENT AND ITS CONTENTS ARE THE PROPERTY OF SHADE SYSTEMS, INC., AND CANNOT BE MODIFIED, USED, OR RESOLD TO ANY PERSON OR ENTITY WITHOUT WRITTEN PERMISSION FROM SHADE SYSTEMS, INC. REPRODUCTION OF THESE PLANS, EITHER IN WHOLE OR IN PART, INCLUDING ANY FORM OF COPYING AND/OR PREPARATION OF DERIVATIVE WORKS THEREOF, FOR ANY REASON WITHOUT PRIOR WRITTEN PERMISSION FROM SHADE SYSTEMS, INC. IS STRICTLY PROHIBITED.
© 2025 SHADE SYSTEMS INC.

NOTE TO OWNER:
OWNER ACCEPTS FULL RESPONSIBILITY FOR REMOVING THE FABRIC SHADE MATERIAL FROM THE STEEL FRAME WHEN SEVERE WEATHER CONDITIONS ARE PREDICTED. SUCH CONDITIONS INCLUDE PREDICTED WIND SPEEDS IN EXCESS OF 90 MPH. ALSO, AS STRUCTURE IS NOT DESIGNED FOR ANY SNOW LOAD, IT IS RECOMMENDED THAT CANOPY BE REMOVED WHEN SNOWFALL IS EXPECTED.

Shade systems INC.
4150 S.W. 19 Street
Ocala, FL 34474
Tel.: 1-800-609-6066

Shelter Cove Park
39 Shelter Cove Lane
Hilton Head Island, SC 29928

Approved:

SOUTH CAROLINA REGISTERED PROFESSIONAL ENGINEER
No. 12481
THOMAS R. SADLER

Model Name:
CUSTOM SAIL SHADE SYSTEM STRUCTURE

Model No.:
SAIL

Revisions

REP:

REP QTE. NO.
Q-14193

Approved: JRB	Job: 9888-2
Checked: MG	
Drawn: AG	
Date: 04/17/2025	Sheets: 1 OF 1
NOT TO SCALE	

Shelter Cove Park Expansion
33 Shelter Cove Lane
Conceptual - Staff Comments
December 9, 2025
DRB-001102-2025

DESIGN TEAM/DRB COMMENT SHEET

The comments below are staff recommendations to the Design Review Board (DRB) and do NOT constitute DRB approval or denial.

PROJECT NAME: 33 Shelter Cove Lane – Shelter Cove Park Expansion DRB-001102-2025

DATE: 12/09/2025 CATEGORY: Conceptual

RECOMMENDATION: Approval ☐ Approval with Conditions ☒ Denial ☐

APPLICATION MATERIAL

DRB REQUIREMENTS	Complies Yes	No	Not Applicable	Comments or Conditions
Demolition Plan if needed	☐	☒	☐	Please provide a demolition plan.
Existing Conditions match As-Built	☒	☐	☐	
Dimensioned Details and of Sections	☒	☐	☐	
Detail Illustrating Connection to Existing Structure	☒	☐	☐	
New Building Details Match Existing Building Details	☐	☐	☒	

ARCHITECTURAL DESIGN

DESIGN GUIDE/LMO CRITERIA	Complies Yes	No	Not Applicable	Comments or Conditions
Structure is designed to be appropriate to the neighborhood	☒	☐	☐	
Promotes pedestrian scale and circulation	☒	☐	☐	
Design is unobtrusive and set into the natural environment	☒	☐	☐	
Utilizes natural materials and colors	☒	☐	☐	
Avoids distinctive vernacular styles	☒	☐	☐	
Design is appropriate for its use	☒	☐	☐	
All facades shall have equal design characteristics	☐	☐	☒	

Avoids monotonous planes or unrelieved repetition	☒	☐	☐	
Has a strong roof form with enough variety to provide visual interest	☐	☐	☒	
Overhangs are sufficient for the façade height.	☐	☐	☒	
Forms and details are sufficient to reduce the mass of the structure	☒	☐	☐	
Human scale is achieved by the use of proper proportions and architectural elements	☒	☐	☐	
Utilizes a variety of materials, textures and colors	☒	☐	☐	
Incorporates wood or wood simulating materials	☒	☐	☐	
Windows are in proportion to the facade	☐	☐	☒	
Details are clean, simple and appropriate while avoiding excessive ornamentation	☒	☐	☐	
Utilities and equipment are concealed from view	☐	☐	☒	
Decorative lighting is limited and low wattage and adds to the visual character	☒	☐	☐	
Accessory elements are designed to coordinate with the primary structure	☒	☐	☐	

LANDSCAPE DESIGN

DESIGN GUIDE/LMO CRITERIA	Complies Yes	No	Not Applicable	Comments or Conditions
Treats the Landscape as a major element of the project	☒	☐	☐	
Provides Landscaping of a scope and size that is in proportion to the scale of the development	☒	☐	☐	
Landscape is designed so that it may be maintained in its natural shape and size	☒	☐	☐	
Preserves a variety of existing native trees and shrubs	☒	☐	☐	
Provides for a harmonious setting for the site's structures, parking areas or other construction	☒	☐	☐	
Location of existing trees and new trees provides street buffers, mitigation for parking lots, and an architectural complement that visually mitigates between parking lots and building(s)	☒	☐	☐	
Shrubs are selected to complement the natural setting, provide visual interest and screen less-desirable elements of the project	☒	☐	☐	
A variety of species is selected for texture and color	☒	☐	☐	
Provides overall order and continuity of the Landscape plan	☒	☐	☐	

Native plants or plants that have historically been prevalent on the Island are utilized	☒	☐	☐	
A variety of sizes is selected to create a "layered" appearance for visual interest and a sense of depth	☒	☐	☐	
The location of existing mature trees is taken into account in placement of shrubs so as not to damage tree roots	☒	☐	☐	
Proper spacing and location for plants to reach their mature size and natural shape while avoiding excessive or unnatural pruning	☒	☐	☐	
Proposed groundcovers are evergreen species with low maintenance needs	☒	☐	☐	
Large, grassed lawn areas encompassing a major portion of the site are avoided	☒	☐	☐	
The adjacent development is taken into account in determining the most appropriate buffer so as not to depart too dramatically from the neighborhood	☒	☐	☐	
Ornamentals and Annuals are limited to entrances and other focal points	☒	☐	☐	

NATURAL RESOURCE PROTECTION

DESIGN GUIDE/LMO CRITERIA	Complies Yes	No	Not Applicable	Comments or Conditions
An effort has been made to preserve existing trees and under story plants	☒	☐	☐	
Supplemental and replacement trees meet LMO requirements for size, species and number	☒	☐	☐	
Wetlands if present are avoided and the required buffers are maintained	☐	☐	☒	
Sand dunes if present are not disturbed	☐	☐	☒	

COMMENTS & CONDITIONS

Staff recommend approval of the Conceptual submittal for 33 Shelter Cove Lane, Shelter Cove Park expansion with the following conditions:

1. Provide a Demolition Plan
2. Provide a materials board.
3. Provide more information on the observation deck.
4. Any additional information as required by the Board.

TOWN OF HILTON HEAD ISLAND

Design Review Board

TO: The Design Review Board
FROM: Melissa Paul-Leto
CC: Trey Lowe
DATE: December 12, 2025
SUBJECT: Consideration and Review of Amendments to the Rules and Procedures

---

This is a request to review changes to the Rules of Procedure for the Design Review Board. Changes made to the Rules of Procedure include:

1. Meeting day change.
2. Chair of the Design Review Board name change.

Newly added language is illustrated with double underline and deleted language is illustrated with ~~strikethrough~~.

Design Review Board

Rules of Procedure

Town of Hilton Head Island

Article I
Purpose and Function

The Design Review Board is established as a board of architectural and landscape design review for projects in the Corridor Overlay District and for signs throughout the community. Its main responsibilities include the review of development within the Corridor Overlay District, the review of applications for sign permits; and the review of the Design Guide or documents relating to aesthetics. In carrying out its duties, the Design Review Board must work within the legal framework and requirements of the law while exercising elemental fairness and open mindedness.

Article II
Rules of Procedure

Section 1. Rules of Procedure.

These *Rules of Procedure* are adopted by the Board pursuant to SC Code 6-29-870 and Appendix A-4 of the LMO. The *Rules of Procedure* can be suspended by majority vote of the Board to meet particular circumstances. If there is a situation where the *Rules of Procedure* are not specific concerning an issue, then the most recent edition of *Robert's Rules of Order* shall govern the conduct of meetings on the issue not covered.

Section 2. Amendments.

1. Written notification of proposed amendments to these rules must be given or mailed to each member at least one (1) calendar week before the meeting at which a vote on the proposal(s) is intended. The notice shall include: (1) the proposed amendment(s); (2) reason(s) for the proposal(s); and (3) the date of the meeting for the intended vote.
2. Adoption of proposed amendments shall require the favorable vote of the majority of the members serving at the time of the vote.
3. The effective date of adopted amendments shall be the next regularly scheduled meeting following adoption.

Article III
Board Organization and Duties

Section 1. Membership.

1. **Number and Qualifications.** The Board shall consist of seven members appointed by the Town Council. To the extent practicable, the appointed members shall include at least one attorney and at least two but not more than three design professionals (such as a registered architect, a landscape architect or a graphic artist). None of the members shall hold an elected public office or position with the Town of Hilton Head Island or Beaufort County, South Carolina, and no former Board member shall be appointed to the Board without having been absent from the Board for a period of at least one year.
2. **Length of Terms.** Members of the Board shall be appointed annually for three-year terms effective each July 1, with all such terms ending on June 30 of the applicable year, unless a member is appointed to fill a vacancy. Vacancies shall be filled by the Town Council by appointments for the balance of any unexpired terms.
3. **Term Limits.** No member may serve more than two successive terms, except at the pleasure of the Town Council when the Council believes that such continuation of service is in the best interest of the Community and is for a specific purpose. Service to fill an unexpired term of less than one and one-half years shall not constitute a term of service for the purpose of these term limits.
4. **Attendance/Absences.** Board members are expected to attend all Board meetings. Each member of the board who has prior knowledge that they will not be able to attend a scheduled Regular Meeting of the board shall notify the Secretary no later than noon the business day before the meeting. In the case of an emergency, a member shall give the earliest possible notification. The Secretary or Staff shall notify the Chairperson in the event that the projected absence(s) will produce a lack of a quorum.
5. **Removal.** Three (3) unexcused absences at Regular or Special Meetings of the Board during one calendar year shall be cause for recommendation by the Chairperson to the Town Council to reconsider the appointment of that member. Attendance records shall be reviewed annually by the Chairperson.

Section 2. Election of Officers.

The officers of the Board shall be a Chairperson and a Vice-Chairperson for one-year terms beginning on the first meeting in July. They are elected annually by the Board members no later than at the first meeting in July. Neither of these two positions shall be filled by a member who has not served at least 1 year on the Board. Nominations for the Chairperson and Vice-Chairperson shall be made from the floor at the meeting with a roll call election to follow.

A majority vote is normally required to elect to office. If no one in an election receives a majority vote, the vote must be repeated until one of them does get a majority. Votes can be taken by ballot or show of hands if there is more than one candidate.

A. Chairperson. The term shall be for one year. At the end of each year, the Chairperson may be re-elected subject to his/her appointment term. The Chairperson shall be a voting member, and shall have the following duties:

1. In consultation with the Staff Board Coordinator, create agendas for all meetings;
2. Preside at all meetings of the Board;
3. Act as spokesperson for the Board;
4. Sign documents for the Board;
5. Designate a Board member or personally act as liaison with other governmental agencies and Town boards;
6. Assign or delegate tasks to other Board members as may be necessary to perform the Board's functions;
7. If approved by Town Council, make appointments to committees of the Board and be an ex-officio member of all committees with a voice in discussions, but with no authority to vote on questions before committees unless specified;
8. Transmit reports and recommendations to Town Council;
9. Work with the Staff Board Coordinator to ensure all business is conducted in accordance with procedures;
10. Cancel a scheduled board meeting if there are no agenda items; and
11. Perform other duties approved by the Board.

B. Vice-Chairperson. A Vice-Chairperson shall be elected by the Board from among the members in the same manner and for the same term as the Chairperson. The Vice -Chairperson shall serve as Acting Chairperson in the absence of the Chairperson, and, at such time, the Vice-Chairperson shall have the same powers and duties as the Chairperson. The Vice-Chairperson shall succeed the Chairperson, if the office is vacated before the term has expired, to serve the remainder of the unexpired term of the Chairperson. A new Vice-Chairperson shall be elected at the next regular meeting of the Board.

Section 3. Secretary.

With the advice and consent of the Director of Community Development, the Chairperson annually shall appoint or reappoint a member of the Town's Community Development Department staff as Secretary of the Board. The Secretary will not be eligible to vote or to otherwise deliberate in the proceedings of the Board. The Secretary shall:

1. Publish and post notices of all meetings of the Board;

2. Assist the Staff Board Coordinator in preparation of meeting agendas;
3. Distribute the agenda, prior minutes and other relevant materials to each Board member in advance of each meeting;
4. Record the proceedings of meetings on audio tape and prepare written minutes of meetings for approval by the Board at its next regular meeting, recording in the written minutes the attendance of members at each meeting;
5. Maintain the Board's notices, correspondence, reports and forms as public records for a period of time consistent with the records retention schedule of the Town of Hilton Head Island; and,
6. Assist in the preparation and forwarding of all reports and recommendations of the Board.

Section 4. Staff Board Coordinator.

The Director of Community Development shall appoint a member of Staff to assist the Chairperson and the Secretary in Board coordination, including discussing agenda items and any other item that needs attention for the efficient running of the meetings.

Section 5. Duties of the Design Review Board.

The LMO and the Code of South Carolina set forth the duties of the Board and those mandated items that fall under their review, along with their review process. Also mandated by the Code of South Carolina are a 6 hour Orientation Program and a 3 hour/year Continuing Education Program.

Article IV
Meetings and Quorum

Section 1. Regular and Special Meetings.

1. **Meeting Schedule.** An annual schedule of regular meetings and work sessions of the Board shall be adopted, published and posted at the Town Government Center in late Fall of each year for the next calendar year. Meetings shall be held at the time and place stated in notices and shall be open to the public.
2. **Regular Meetings.** Regular Meetings of the Board shall be held at least monthly if there is no business pending. The Board shall meet on the second and fourth ~~Tuesday~~ Wednesday of each month at 2:30 p.m.
3. **Special Meetings.** Special meetings of the Board may be called at any time by the Chairperson. At least twenty-four (24) hours notice of the time and place of special meetings shall be given by the Secretary to each member.
4. **Cancellation of Meetings.** Whenever there is no business for the Board the Secretary

will dispense with a regular meeting by giving notice to all members not less than seventy-two (72) hours prior to the time set for the meeting.

Section 2. Quorum.

A quorum shall consist of four (4) members of the board for regular business. The Secretary will notify the Chairperson in the event projected absences will result in the lack of a quorum. If a quorum for each agenda item for which action is being taken is established, then a member leaves, the quorum is no longer present. Transaction of substantive business on agenda items for which there is not a quorum shall not continue and the remaining items should be postponed to the next meeting.

Section 3. Conflict of Interest.

The question of disqualification shall be decided by the Board member affected, who shall announce the reason for disqualification, give it to the Chairperson in writing, and have it placed in the minutes of the meeting. Any Board member so disqualified shall leave the dais while the disqualifying matter is being considered and refrain from deliberating or voting on the question.

At a minimum, South Carolina law regarding conflicts of interest [S. C. Code Ann. § 8-13-10, *et seq.*, (Supp. 1994)] shall control board members' actions. In addition, any member of the board who believes that he or she has or may have a conflict of interest of any nature on any matter before the board shall, prior to the case at the Regular or Special Meeting at which such matter may be heard or considered by the board:

1. Prepare a written Potential Conflict of Interest Form describing the matter requiring action or decisions and the nature of his/her potential conflict of interest with respect to the action or decision;
2. File the Potential Conflict of Interest Form with the Secretary; and,
3. Provide a copy of the Potential Conflict of Interest Form to the Chairperson.

Upon receipt of a Potential Conflict of Interest Form from any member of the board, as required in section II (J)(A), *supra.*, the Chairperson shall cause the Potential Conflict of Interest form to be recorded in the minutes and shall require that the member filing such Potential Conflict of Interest Form be excused from any votes, deliberations, and any other actions on the matter on which the potential conflict of interest or conflict of interest exists.

Article V
Meeting Administration

Section 1. Media Notices.

The Secretary shall give the notice required by statute or ordinance for all meetings of the Board to include Section 16-2-103.I of the LMO. All Board meetings shall be open to the public and all requirements of the South Carolina Freedom of Information Act [S. C. Code Ann. § 30-4-10, *et seq.* (Supp. 1994)] shall be complied with in the conduct of meetings.

Section 2. Agenda.

A written agenda shall be furnished by the Secretary to each member of the Board and media. An agenda may be changed at the related meeting by a majority vote of the members present. Generally, the agenda should contain:

1. Call to Order;
2. Roll Call;
3. Freedom of Information Act Compliance;
4. Approval of Agenda;
5. Approval of Minutes of Previous Meeting
6. Staff Report;
7. Board Business;
8. Unfinished Business;
9. New Business:
10. Appearance by Citizens;
11. Adjournment.

Section 3. Minutes.

A. Meetings. Minutes of meetings are governed by the Code of South Carolina (30-4-70 through 30-4-90). Minutes of each Board meeting shall be recorded by the Secretary and approved at the next available meeting after their preparation. Final approved Minutes shall be available on microfilm for previous years, and may be posted on the Town's Web site for public information.

B. Minimum Contents of Minutes.

1. Kind of meeting (regular or special).
2. Name of the organization.
3. Date and place of the meeting.
4. Presence of the Chairperson and secretary or the names of substitutes.
5. Presence of a quorum.
6. Names of all members reporting.
7. Names of all those elected or appointed.
8. Time the meeting was called to order.
9. Whether the minutes of the previous meeting were approved or corrected.
10. All adopted and defeated motions. (Withdrawn motions need not be recorded.)

11. Name of the maker of the motion.
12. Record the vote of each member upon each question, or, if absent or failing to vote, indicating that fact.
13. The adjournment and the time of adjournment.
14. Attached reports.

C. Lack of Quorum. If there is lack of a quorum of the Board, minutes may be recorded but shall include a statement in the header of each page indicating that a quorum was not present and the minutes are not official. Such minutes shall not be approved by the Board at a later meeting

D. Motions. Motions must be recorded verbatim.

Article VI
Meeting Organization

Section 1. Regular and Special Meetings.

Generally, the below sequence shall be followed:

1. The Chairperson introduces the agenda item by reading its description on the agenda;
2. Staff presentation (maximum 20 minutes) of the application or other item including an analysis and recommendations to the Board, if so requested. During the presentation by Staff, members of the Board may ask such questions as they deem appropriate. At the discretion of the Chairperson, Staff's time may be extended if the Staff is unable to complete the presentation due to questioning from the Board.
3. If present, the Applicant, his attorney, or agent (maximum 20 minutes) may make remarks, demonstrating compliance with all required architectural standards and guidelines, minimum visual buffers, or other applicable regulations as per Sections 16-3-106.F.3 and 16-3-106.F.4 of the Land Management Ordinance. During the presentation by the Applicant, members of the Board may ask such questions as they deem appropriate. At the discretion of the Chairperson, the Applicant's time may be extended if the Applicant is unable to complete the presentation due to questioning from the Board.
4. Following the presentation, the Board may ask such additional questions of the Applicant or Staff as the members deem appropriate.
5. Comments from the public on the agenda item including why the Board should approve, modify, or disapprove an application. At the Chairman's discretion, speakers could be limited to speaking only once for 3 minutes on each agenda topic.

6. Motion and discussion by the Board;
7. Clarification from Staff, if necessary; and
8. Vote on Motion by the Board.

Section 2. Recess.

A recess shall be declared as deemed appropriate by the Chairperson or by majority vote of the members present at the meeting. No discussion of the agenda item shall be conducted by Board members during the recess.

Section 3. Executive Session.

If a member determines after reviewing the applicable cases that they would benefit from the advice of legal counsel in Executive Session they shall contact the Chairperson or his designee. The Chairperson will determine if an Executive Session is warranted. If the Chairperson decides that the membership would benefit from an Executive Session, they will inform the Board's secretary of the request. The Chairperson's decision can be overridden by a majority vote of the Board taken at a regular or special meeting of the Board.

Executive Session is a meeting at which the proceedings are secret. A member can be punished under disciplinary procedure if he violates the secrecy of an executive session. Non-members permitted to be present in Executive Session are honor-bound not to divulge anything that occurred or was discussed in Executive Session.

Permitted reasons for Executive Session are:

1. Personnel reasons
2. Contracts
3. Legal advice relating to pending, threatened or potential claim
4. Discussion regarding development of security personnel
5. Investigative proceedings regarding allegations of criminal misconduct
6. Economic development (specific criteria in FOIA)

Entering and Adjourning an Executive Session:

1. A motion to close the current meeting and go into executive session is made and passed by a majority vote;
2. Chairperson must announce the specific purpose of the executive session;
3. No formal action may be taken in executive session except to:
    a. Adjourn
    b. Return to public session

The Board can request attendance by non-members as they deem appropriate.

Section 4. Communication with Outside Parties.

1. Once a decision has been rendered by the Board it is then considered final. There should be no further discussions between Board members and staff, applicants and their attorneys on the matter. All further communications should be handled through the Town Attorney.
2. Communication with non-members on behalf of the Board to convey the official position of the Board will be at the discretion of the Chairperson or by an affirmative vote of the majority of the Board members.
3. The Chairperson or his designee will communicate positions or opinions of the Board.

Section 5. Communication among Board Members.

All communication regarding agenda items is to be conducted during the scheduled meeting and not prior to the meeting or during recesses. If Board members need to meet in the field to resolve an application, they shall follow all FOIA regulations regarding a quorum, public notices, minutes and communication with each other.

Section 6. Requests of Staff

Any requests of Staff from the Board, other than questions regarding pending applications, shall be communicated to the Chairperson or his designee. The Chairperson will then decide if the request should be forwarded to the Secretary. If the Chairperson denies the request of a Board member, the members may ask that the request be placed on the Board's agenda for discussion. If the item is voted onto the agenda, and if the majority of the members deem the request of staff appropriate, it will become an official request of the Board.

Section 7. Preliminary Comments.

Persons seeking informal preliminary comments from the Board shall submit their request in writing to the Administrator not less than ten business days before a Board meeting to secure a place on the agenda.

Article VII
Conducting the Meeting

The Chairperson:

1. Is responsible for maintaining order.
2. Should begin the meeting promptly at the scheduled hour if a quorum is present.
3. Should have a well prepared agenda and abide by it.
4. Be familiar with the procedural rules of the bylaws.
5. Keeps the Board working together by explaining procedure clearly and communicating the next business in order.
6. Allow Board members to speak at their will on the agenda item. At the Chairman's discretion, he may "assign" the floor by recognizing those members who wish to speak by calling them by name. No other member may interrupt or call out remarks without being out of order. Private discussion between members while another has the floor is out of order and disruptive members should be reminded of this rule.
7. Should impartially call on members wishing to speak. He should give members on both sides of an issue an opportunity to speak.
8. Should remain calm and objective, keeping the meeting moving.
9. At the Chairman's discretion, he may restate the motion before taking a vote if he believes the motion is unclear. If a motion is confusing, it is the Chairperson's duty to clarify it – rephrasing it or putting a long motion in writing. (Complex motions may be brought to the meeting pre-written.) The motion is said to be pending once it has been stated by the Chairperson. It must be disposed of in some manner before other business can be considered.
10. If a motion fails to get a second, the Chairperson states, "Since there is no second, the motion is not before this meeting."
11. Opens debate by saying "Is there any discussion?" The Chairperson *must* open all debatable questions to debate.
12. Recognizes members who wish to speak by stating their names.
13. Puts the question to vote. The vote is taken in the following way:
    a. The Chairperson restates the motion – keeping the members clear about the purpose of the vote.
    b. Request Polling of the members for vote.
14. Announces the result of the vote by interpreting the action taken.
15. Should not allow irrelevant discussion. Restate the question and, if necessary directly request the member to "confine his remarks to the pending question."
16. Should use the gavel sparingly, tapping it once to open and close the meeting.
17. Can assist a member in making a motion, or make a motion himself if no motion is being made.
18. Meeting adjourned without motion – "If there is no further business and there is no

objection, the meeting will be adjourned. There being no objection, the meeting is adjourned."

Article VIII
Board Actions

Section 1. Motions.

The attached charts on Motions give the various types of motions that can be done by a Board member.

Section 2. Voting.

1. A Board member must be present at the beginning of each case to discuss and vote on the case.
2. All members of the Board shall be voting members, and shall be entitled to vote on any issue before the Board unless disqualified by law.
3. A simple majority of a quorum shall be required to conduct all other Board business.

For the Design Review Board
Town of Hilton Head Island, South Carolina

By: _____

Date of Approval: ~~Cathy Foss~~Judd Carstens, Its Chairperson

Attachment for Reference

TYPES OF MOTIONS

Main Motions	**A main motion is defined as a proposal that certain action is taken or an opinion be expressed by the group.** The words to use are: "I Move."
Secondary Motions	**A secondary motion is one which can be made *while* the main motion is on the floor and *before* it has been decided.** Secondary motions are divided into three classes which relate to their use in parliamentary procedure. Those classes are: o Subsidiary motions o Privileged motions o Incidental motions
Subsidiary Motions	**Subsidiary motions relate directly to the motion on the floor. They may change the words, send it to a committee, delay it, etc**. They are designed to expedite business by disposing of the pending motion other than by adopting or rejecting it. *Subsidiary motions are the class of motions most frequently used in meetings*. These motions have rank (order of precedence of motions) among themselves. A motion of higher rank can be made while a motion of lower rank is on the floor. The lower rank motion "yields" to the higher rank motion. (Motion to postpone has higher rank than the motion to commit and takes precedence. If motion to postpone is adopted, the main motion and the motion to commit are postponed until the next meeting.)
Privileged Motions	**Privileged motions are motions of an emergency nature,** such as to recess or adjourn. They do not relate to the motion on the floor but to the welfare of the group. They are of high rank and must be handled before any other business that may be pending.
Incidental Moti	**Incidental motions are procedural**. They deal with process, such as enforcing proper procedure, correcting errors, verifying votes, etc. When introduced, they must be decided before business can resume.
Amending Motion	General consent can be used with amendments to motions if the Chairperson feels the group will accept the amendment. "If there is no objection, the motion is so amended." *Restate the motion.*
Motions Commit	Have precedence over the motion to amend. **More than one motion can be on the floor but only one question.** All pending motions must relate to the main motion on the floor. No new business may be introduced.
Point of Order	Motion used if a board member feels the Chairperson's failing to operate within the rules.

Restorative Motions or Motions that Bring Back a Question

Restorative Motion	**Allows a group to change its mind.** o They are a separate category because of their contradiction to the parliamentary rule that once a question has been decided it cannot be brought up again at the same meeting. o Within limits, members have the right to rethink a situation if they feel their decision has been made too quickly or without enough information. o The two most commonly used restorative motions are: ***Rescind*** and ***Reconsider***.
Rescind	**Rescind is the motion to use to quash or nullify a previously adopted motion.** It may strike out an entire motion, resolution, bylaw, etc.

	○ Rescind is *not in order* when any action has already been taken as a result of the vote, such as any kind of contract when the other party has been notified. ○ It must be seconded. ○ It requires a *two-thirds* vote unless *notice has been given* at the previous meeting, either verbally or in writing. If notice has been given, the motion requires only a *majority* vote.
Reconsider	**Reconsider is the motion which allows a group to reconsider the vote on a motion**. It enables a majority of the members, within a limited time, to bring back a motion for further consideration after it has been acted upon. Its purpose is to prevent hasty or ill-advised action. ○ Reconsider has special rules to prevent its abuse by a disgruntled minority, since it allows a question already decided to be brought up again. ○ Rules limit who can make the motion. **It can only be made by someone who voted on the *prevailing* (winning) side.** ○ **It has a *time limit*. It must be made on the *same day* that the vote to be reconsidered was taken.** ○ It requires a second. ○ It may be debated and it opens up the motion to which it is applied to debate. ○ It requires only a majority vote. ○ It may be made and seconded while other business is pending because of its time limit. However, it is not debated and voted on until the business on the floor is completed. ○ All action that might come out of the original motion is stopped at the time that reconsider is made and seconded. This is the main value of the motion, and it should be made as quickly as the situation calling for it is recognized.
Amend a Motion	**Change the wording to make it clearer, more complete, or more acceptable *before the motion is voted upon*.** The amendment must be germane to the motion on the floor to be in order. Adoption of the amendment does not adopt the motion. If the group votes "no" on the amendment, the motion is on the floor in its original wording.
Amend an Amendment	First amendment is called the primary and the amendment to the amendment is the secondary amendment. Only two amendments may be pending at any time. First vote on the amendment to the amendment (secondary), then vote on the original amendment (primary), then vote on the main motion. Amendments require a majority vote.
Friendly Amendments	Change in wording to enhance the original motion – can be changed by general consent.
Hostile Amendments	Gives a different meaning to a motion and may defeat the intent of the main motion.
To Commit or Refer a Motion	Sends the question to a small group (committee) to be studied and put into proper form for the group to consider. Motion includes specific directions as to where the question ought to go (what committee). Motion can be applied to any main motion with any amendments that may be pending. It must be seconded, it can be debated, and requires a majority vote.
Postpone	**Delays action on a question until later in the same meeting or until the next meeting**. *A motion cannot be postponed further than the next regular meeting*. Can be applied to all main motions, it must be seconded, it can be debated, it can be amended (as to time of the postponement), it requires a majority vote. Motion is called up automatically when the time to which it was postponed arrives (place under Unfinished Business on agenda of next meeting).
Limit Debate	**Motion to exercise special control over debate** – reducing the number and length of speeches allowed. Used with any motion, must be seconded, is not debatable, can be amended (but only as to the length of speeches or when the vote will be taken), requires 2/3 vote, vote must be taken by show of hands or a rising vote in a large group. (Need a timekeeper and timer if speeches have a time limit.)

Previous Question	**The motion used to cut off debate and to bring the group to an immediate vote on the pending motion. (Call the question for an immediate vote).** Previous question can be ruled out of order if the motion is debatable and has not received debate. Motion requires 2/3 vote (by show of hands or standing vote). Not debatable.
Postpone Indefinitely	Lowest-ranked subsidiary motion is used to kill a main motion. It avoids a direct vote on the question on the floor. Shouldn't be used.
Lay on the Table	Highest-ranked subsidiary motion. Cannot be amended or debated. It is out of order when used to "kill or avoid dealing with a measure". **Was designed as a courtesy motion to allow a group to set aside a question for something more important, such as arrival of a speaker.**
Withdraw a Motion	**Permission to withdraw a motion allows a member who realizes he has made a hasty or ill-advised motion to withdraw it with the consent of the group**. This device saves time in disposing of the motion. The presiding officer usually handles the request by use of general consent.
Dilatory Tactics	A dilatory tactic is the misuse of parliamentary procedure to deliberately delay or prevent action in a meeting. It is the duty of the presiding officer to prevent a dissident minority from misusing legitimate forms of motions to obstruct business. Such motions should be ruled out of order or those members engaged in such game playing should not be recognized.

TYPES OF VOTES

Majority Vote	• **More than half of the votes cast.** • The minority has the right to be heard, but once a decision has been reached by a majority of the members present and voting, the minority must then respect and abide by the decision.
Silence is Consent	Those members who do not vote, agree to go along with the decision of the majority by their silence.
Two-thirds Vote	**A two-thirds vote is necessary whenever you are limiting or taking away the rights of members or whenever you are changing something that has already been decided.** A two-thirds vote has at least twice as many votes on the winning side as on the losing side. A show of hands should be taken for *all* motions requiring a *two-thirds vote*. If a motion requires a two-thirds vote, the Chairperson should inform the group of that.
General Consent	**Is an informal agreement of the group, the method in which action is taken without a formal vote or on occasion without a motion.** The Chairperson initiates the procedure to expedite business. Usually done to approve and correct the minutes. • The presiding officer always pauses after asking if there is any objection. If there is *any* objection, the matter is put to a vote in the usual way. • A member may object because he feels it is important to have a formal vote and dispel any suspicion of railroading.
Tie Vote	Is a *lost* vote because a majority was not obtained. The *Chairperson is not compelled to break a tie*. While the Chairperson has a right to vote as a member, it is recommended he not vote unless the vote is by ballot. He may also vote in cases where the vote would change the result. The Chairperson should appear impartial.

Design Review Board

Rules of Procedure

Town of Hilton Head Island

Article I
Purpose and Function

The Design Review Board is established as a board of architectural and landscape design review for projects in the Corridor Overlay District and for signs throughout the community. Its main responsibilities include the review of development within the Corridor Overlay District, the review of applications for sign permits; and the review of the Design Guide or documents relating to aesthetics. In carrying out its duties, the Design Review Board must work within the legal framework and requirements of the law while exercising elemental fairness and open mindedness.

Article II
Rules of Procedure

Section 1. Rules of Procedure.

These *Rules of Procedure* are adopted by the Board pursuant to SC Code 6-29-870 and Appendix A-4 of the LMO. The *Rules of Procedure* can be suspended by majority vote of the Board to meet particular circumstances. If there is a situation where the *Rules of Procedure* are not specific concerning an issue, then the most recent edition of *Robert's Rules of Order* shall govern the conduct of meetings on the issue not covered.

Section 2. Amendments.

1. Written notification of proposed amendments to these rules must be given or mailed to each member at least one (1) calendar week before the meeting at which a vote on the proposal(s) is intended. The notice shall include: (1) the proposed amendment(s); (2) reason(s) for the proposal(s); and (3) the date of the meeting for the intended vote.
2. Adoption of proposed amendments shall require the favorable vote of the majority of the members serving at the time of the vote.
3. The effective date of adopted amendments shall be the next regularly scheduled meeting following adoption.

Article III
Board Organization and Duties

Section 1. Membership.

1. **Number and Qualifications.** The Board shall consist of seven members appointed by the Town Council. To the extent practicable, the appointed members shall include at least one attorney and at least two but not more than three design professionals (such as a registered architect, a landscape architect or a graphic artist). None of the members shall hold an elected public office or position with the Town of Hilton Head Island or Beaufort County, South Carolina, and no former Board member shall be appointed to the Board without having been absent from the Board for a period of at least one year.
2. **Length of Terms.** Members of the Board shall be appointed annually for three-year terms effective each July 1, with all such terms ending on June 30 of the applicable year, unless a member is appointed to fill a vacancy. Vacancies shall be filled by the Town Council by appointments for the balance of any unexpired terms.
3. **Term Limits.** No member may serve more than two successive terms, except at the pleasure of the Town Council when the Council believes that such continuation of service is in the best interest of the Community and is for a specific purpose. Service to fill an unexpired term of less than one and one-half years shall not constitute a term of service for the purpose of these term limits.
4. **Attendance/Absences.** Board members are expected to attend all Board meetings. Each member of the board who has prior knowledge that they will not be able to attend a scheduled Regular Meeting of the board shall notify the Secretary no later than noon the business day before the meeting. In the case of an emergency, a member shall give the earliest possible notification. The Secretary or Staff shall notify the Chairperson in the event that the projected absence(s) will produce a lack of a quorum.
5. **Removal.** Three (3) unexcused absences at Regular or Special Meetings of the Board during one calendar year shall be cause for recommendation by the Chairperson to the Town Council to reconsider the appointment of that member. Attendance records shall be reviewed annually by the Chairperson.

Section 2. Election of Officers.

The officers of the Board shall be a Chairperson and a Vice-Chairperson for one-year terms beginning on the first meeting in July. They are elected annually by the Board members no later than at the first meeting in July. Neither of these two positions shall be filled by a member who has not served at least 1 year on the Board. Nominations for the Chairperson and Vice-Chairperson shall be made from the floor at the meeting with a roll call election to follow.

A majority vote is normally required to elect to office. If no one in an election receives a majority vote, the vote must be repeated until one of them does get a majority. Votes can be taken by ballot or show of hands if there is more than one candidate.

A. Chairperson. The term shall be for one year. At the end of each year, the Chairperson may be re-elected subject to his/her appointment term. The Chairperson shall be a voting member, and shall have the following duties:

1. In consultation with the Staff Board Coordinator, create agendas for all meetings;
2. Preside at all meetings of the Board;
3. Act as spokesperson for the Board;
4. Sign documents for the Board;
5. Designate a Board member or personally act as liaison with other governmental agencies and Town boards;
6. Assign or delegate tasks to other Board members as may be necessary to perform the Board's functions;
7. If approved by Town Council, make appointments to committees of the Board and be an ex-officio member of all committees with a voice in discussions, but with no authority to vote on questions before committees unless specified;
8. Transmit reports and recommendations to Town Council;
9. Work with the Staff Board Coordinator to ensure all business is conducted in accordance with procedures;
10. Cancel a scheduled board meeting if there are no agenda items; and
11. Perform other duties approved by the Board.

B. Vice-Chairperson. A Vice-Chairperson shall be elected by the Board from among the members in the same manner and for the same term as the Chairperson. The Vice -Chairperson shall serve as Acting Chairperson in the absence of the Chairperson, and, at such time, the Vice-Chairperson shall have the same powers and duties as the Chairperson. The Vice-Chairperson shall succeed the Chairperson, if the office is vacated before the term has expired, to serve the remainder of the unexpired term of the Chairperson. A new Vice-Chairperson shall be elected at the next regular meeting of the Board.

Section 3. Secretary.

With the advice and consent of the Director of Community Development, the Chairperson annually shall appoint or reappoint a member of the Town's Community Development Department staff as Secretary of the Board. The Secretary will not be eligible to vote or to otherwise deliberate in the proceedings of the Board. The Secretary shall:

1. Publish and post notices of all meetings of the Board;

2. Assist the Staff Board Coordinator in preparation of meeting agendas;
3. Distribute the agenda, prior minutes and other relevant materials to each Board member in advance of each meeting;
4. Record the proceedings of meetings on audio tape and prepare written minutes of meetings for approval by the Board at its next regular meeting, recording in the written minutes the attendance of members at each meeting;
5. Maintain the Board's notices, correspondence, reports and forms as public records for a period of time consistent with the records retention schedule of the Town of Hilton Head Island; and,
6. Assist in the preparation and forwarding of all reports and recommendations of the Board.

Section 4. Staff Board Coordinator.

The Director of Community Development shall appoint a member of Staff to assist the Chairperson and the Secretary in Board coordination, including discussing agenda items and any other item that needs attention for the efficient running of the meetings.

Section 5. Duties of the Design Review Board.

The LMO and the Code of South Carolina set forth the duties of the Board and those mandated items that fall under their review, along with their review process. Also mandated by the Code of South Carolina are a 6 hour Orientation Program and a 3 hour/year Continuing Education Program.

Article IV
Meetings and Quorum

Section 1. Regular and Special Meetings.

1. **Meeting Schedule.** An annual schedule of regular meetings and work sessions of the Board shall be adopted, published and posted at the Town Government Center in late Fall of each year for the next calendar year. Meetings shall be held at the time and place stated in notices and shall be open to the public.
2. **Regular Meetings.** Regular Meetings of the Board shall be held at least monthly if there is no business pending. The Board shall meet on the second and fourth Tuesday of each month at 2:30 p.m.
3. **Special Meetings.** Special meetings of the Board may be called at any time by the Chairperson. At least twenty-four (24) hours notice of the time and place of special meetings shall be given by the Secretary to each member.
4. **Cancellation of Meetings.** Whenever there is no business for the Board the Secretary

will dispense with a regular meeting by giving notice to all members not less than seventy-two (72) hours prior to the time set for the meeting.

Section 2. Quorum.

A quorum shall consist of four (4) members of the board for regular business. The Secretary will notify the Chairperson in the event projected absences will result in the lack of a quorum. If a quorum for each agenda item for which action is being taken is established, then a member leaves, the quorum is no longer present. Transaction of substantive business on agenda items for which there is not a quorum shall not continue and the remaining items should be postponed to the next meeting.

Section 3. Conflict of Interest.

The question of disqualification shall be decided by the Board member affected, who shall announce the reason for disqualification, give it to the Chairperson in writing, and have it placed in the minutes of the meeting. Any Board member so disqualified shall leave the dais while the disqualifying matter is being considered and refrain from deliberating or voting on the question.

At a minimum, South Carolina law regarding conflicts of interest [S. C. Code Ann. § 8-13-10, *et seq.*, (Supp. 1994)] shall control board members' actions. In addition, any member of the board who believes that he or she has or may have a conflict of interest of any nature on any matter before the board shall, prior to the case at the Regular or Special Meeting at which such matter may be heard or considered by the board:

1. Prepare a written Potential Conflict of Interest Form describing the matter requiring action or decisions and the nature of his/her potential conflict of interest with respect to the action or decision;
2. File the Potential Conflict of Interest Form with the Secretary; and,
3. Provide a copy of the Potential Conflict of Interest Form to the Chairperson.

Upon receipt of a Potential Conflict of Interest Form from any member of the board, as required in section II (J)(A), *supra.*, the Chairperson shall cause the Potential Conflict of Interest form to be recorded in the minutes and shall require that the member filing such Potential Conflict of Interest Form be excused from any votes, deliberations, and any other actions on the matter on which the potential conflict of interest or conflict of interest exists.

Article V
Meeting Administration

Section 1. Media Notices.

The Secretary shall give the notice required by statute or ordinance for all meetings of the Board to include Section 16-2-103.I of the LMO. All Board meetings shall be open to the public and all requirements of the South Carolina Freedom of Information Act [S. C. Code Ann. § 30-4-10, *et seq.* (Supp. 1994)] shall be complied with in the conduct of meetings.

Section 2. Agenda.

A written agenda shall be furnished by the Secretary to each member of the Board and media. An agenda may be changed at the related meeting by a majority vote of the members present. Generally, the agenda should contain:

1. Call to Order;
2. Roll Call;
3. Freedom of Information Act Compliance;
4. Approval of Agenda;
5. Approval of Minutes of Previous Meeting
6. Staff Report;
7. Board Business;
8. Unfinished Business;
9. New Business:
10. Appearance by Citizens;
11. Adjournment.

Section 3. Minutes.

A. Meetings. Minutes of meetings are governed by the Code of South Carolina (30-4-70 through 30-4-90). Minutes of each Board meeting shall be recorded by the Secretary and approved at the next available meeting after their preparation. Final approved Minutes shall be available on microfilm for previous years, and may be posted on the Town's Web site for public information.

B. Minimum Contents of Minutes.

1. Kind of meeting (regular or special).
2. Name of the organization.
3. Date and place of the meeting.
4. Presence of the Chairperson and secretary or the names of substitutes.
5. Presence of a quorum.
6. Names of all members reporting.
7. Names of all those elected or appointed.
8. Time the meeting was called to order.
9. Whether the minutes of the previous meeting were approved or corrected.
10. All adopted and defeated motions. (Withdrawn motions need not be recorded.)

11. Name of the maker of the motion.
12. Record the vote of each member upon each question, or, if absent or failing to vote, indicating that fact.
13. The adjournment and the time of adjournment.
14. Attached reports.

C. Lack of Quorum. If there is lack of a quorum of the Board, minutes may be recorded but shall include a statement in the header of each page indicating that a quorum was not present and the minutes are not official. Such minutes shall not be approved by the Board at a later meeting

D. Motions. Motions must be recorded verbatim.

Article VI
Meeting Organization

Section 1. Regular and Special Meetings.

Generally, the below sequence shall be followed:

1. The Chairperson introduces the agenda item by reading its description on the agenda;
2. Staff presentation (maximum 20 minutes) of the application or other item including an analysis and recommendations to the Board, if so requested. During the presentation by Staff, members of the Board may ask such questions as they deem appropriate. At the discretion of the Chairperson, Staff's time may be extended if the Staff is unable to complete the presentation due to questioning from the Board.
3. If present, the Applicant, his attorney, or agent (maximum 20 minutes) may make remarks, demonstrating compliance with all required architectural standards and guidelines, minimum visual buffers, or other applicable regulations as per Sections 16-3-106.F.3 and 16-3-106.F.4 of the Land Management Ordinance. During the presentation by the Applicant, members of the Board may ask such questions as they deem appropriate. At the discretion of the Chairperson, the Applicant's time may be extended if the Applicant is unable to complete the presentation due to questioning from the Board.
4. Following the presentation, the Board may ask such additional questions of the Applicant or Staff as the members deem appropriate.
5. Comments from the public on the agenda item including why the Board should approve, modify, or disapprove an application. At the Chairman's discretion, speakers could be limited to speaking only once for 3 minutes on each agenda topic.

6. Motion and discussion by the Board;
7. Clarification from Staff, if necessary; and
8. Vote on Motion by the Board.

Section 2. Recess.

A recess shall be declared as deemed appropriate by the Chairperson or by majority vote of the members present at the meeting. No discussion of the agenda item shall be conducted by Board members during the recess.

Section 3. Executive Session.

If a member determines after reviewing the applicable cases that they would benefit from the advice of legal counsel in Executive Session they shall contact the Chairperson or his designee. The Chairperson will determine if an Executive Session is warranted. If the Chairperson decides that the membership would benefit from an Executive Session, they will inform the Board's secretary of the request. The Chairperson's decision can be overridden by a majority vote of the Board taken at a regular or special meeting of the Board.

Executive Session is a meeting at which the proceedings are secret. A member can be punished under disciplinary procedure if he violates the secrecy of an executive session. Non-members permitted to be present in Executive Session are honor-bound not to divulge anything that occurred or was discussed in Executive Session.

Permitted reasons for Executive Session are:

1. Personnel reasons
2. Contracts
3. Legal advice relating to pending, threatened or potential claim
4. Discussion regarding development of security personnel
5. Investigative proceedings regarding allegations of criminal misconduct
6. Economic development (specific criteria in FOIA)

Entering and Adjourning an Executive Session:

1. A motion to close the current meeting and go into executive session is made and passed by a majority vote;
2. Chairperson must announce the specific purpose of the executive session;
3. No formal action may be taken in executive session except to:
    a. Adjourn
    b. Return to public session

The Board can request attendance by non-members as they deem appropriate.

Section 4. Communication with Outside Parties.

1. Once a decision has been rendered by the Board it is then considered final. There should be no further discussions between Board members and staff, applicants and their attorneys on the matter. All further communications should be handled through the Town Attorney.
2. Communication with non-members on behalf of the Board to convey the official position of the Board will be at the discretion of the Chairperson or by an affirmative vote of the majority of the Board members.
3. The Chairperson or his designee will communicate positions or opinions of the Board.

Section 5. Communication among Board Members.

All communication regarding agenda items is to be conducted during the scheduled meeting and not prior to the meeting or during recesses. If Board members need to meet in the field to resolve an application, they shall follow all FOIA regulations regarding a quorum, public notices, minutes and communication with each other.

Section 6. Requests of Staff

Any requests of Staff from the Board, other than questions regarding pending applications, shall be communicated to the Chairperson or his designee. The Chairperson will then decide if the request should be forwarded to the Secretary. If the Chairperson denies the request of a Board member, the members may ask that the request be placed on the Board's agenda for discussion. If the item is voted onto the agenda, and if the majority of the members deem the request of staff appropriate, it will become an official request of the Board.

Section 7. Preliminary Comments.

Persons seeking informal preliminary comments from the Board shall submit their request in writing to the Administrator not less than ten business days before a Board meeting to secure a place on the agenda.

Article VII
Conducting the Meeting

The Chairperson:

1. Is responsible for maintaining order.
2. Should begin the meeting promptly at the scheduled hour if a quorum is present.
3. Should have a well prepared agenda and abide by it.
4. Be familiar with the procedural rules of the bylaws.
5. Keeps the Board working together by explaining procedure clearly and communicating the next business in order.
6. Allow Board members to speak at their will on the agenda item. At the Chairman's discretion, he may "assign" the floor by recognizing those members who wish to speak by calling them by name. No other member may interrupt or call out remarks without being out of order. Private discussion between members while another has the floor is out of order and disruptive members should be reminded of this rule.
7. Should impartially call on members wishing to speak. He should give members on both sides of an issue an opportunity to speak.
8. Should remain calm and objective, keeping the meeting moving.
9. At the Chairman's discretion, he may restate the motion before taking a vote if he believes the motion is unclear. If a motion is confusing, it is the Chairperson's duty to clarify it – rephrasing it or putting a long motion in writing. (Complex motions may be brought to the meeting pre-written.) The motion is said to be pending once it has been stated by the Chairperson. It must be disposed of in some manner before other business can be considered.
10. If a motion fails to get a second, the Chairperson states, "Since there is no second, the motion is not before this meeting."
11. Opens debate by saying "Is there any discussion?" The Chairperson *must* open all debatable questions to debate.
12. Recognizes members who wish to speak by stating their names.
13. Puts the question to vote. The vote is taken in the following way:
    a. The Chairperson restates the motion – keeping the members clear about the purpose of the vote.
    b. Request Polling of the members for vote.
14. Announces the result of the vote by interpreting the action taken.
15. Should not allow irrelevant discussion. Restate the question and, if necessary directly request the member to "confine his remarks to the pending question."
16. Should use the gavel sparingly, tapping it once to open and close the meeting.
17. Can assist a member in making a motion, or make a motion himself if no motion is being made.
18. Meeting adjourned without motion – "If there is no further business and there is no

objection, the meeting will be adjourned. There being no objection, the meeting is adjourned."

Article VIII
Board Actions

Section 1. Motions.

The attached charts on Motions give the various types of motions that can be done by a Board member.

Section 2. Voting.

1. A Board member must be present at the beginning of each case to discuss and vote on the case.
2. All members of the Board shall be voting members, and shall be entitled to vote on any issue before the Board unless disqualified by law.
3. A simple majority of a quorum shall be required to conduct all other Board business.

For the Design Review Board
Town of Hilton Head Island, South Carolina

By: _____
Date of Approval: Cathy Foss, Its Chairperson

Attachment for Reference

TYPES OF MOTIONS

Main Motions	**A main motion is defined as a proposal that certain action is taken or an opinion be expressed by the group.** The words to use are: "I Move."
Secondary Motions	**A secondary motion is one which can be made *while* the main motion is on the floor and *before* it has been decided.** Secondary motions are divided into three classes which relate to their use in parliamentary procedure. Those classes are: o Subsidiary motions o Privileged motions o Incidental motions
Subsidiary Motions	**Subsidiary motions relate directly to the motion on the floor. They may change the words, send it to a committee, delay it, etc**. They are designed to expedite business by disposing of the pending motion other than by adopting or rejecting it. *Subsidiary motions are the class of motions most frequently used in meetings*. These motions have rank (order of precedence of motions) among themselves. A motion of higher rank can be made while a motion of lower rank is on the floor. The lower rank motion "yields" to the higher rank motion. (Motion to postpone has higher rank than the motion to commit and takes precedence. If motion to postpone is adopted, the main motion and the motion to commit are postponed until the next meeting.)
Privileged Motions	**Privileged motions are motions of an emergency nature,** such as to recess or adjourn. They do not relate to the motion on the floor but to the welfare of the group. They are of high rank and must be handled before any other business that may be pending.
Incidental Moti	**Incidental motions are procedural**. They deal with process, such as enforcing proper procedure, correcting errors, verifying votes, etc. When introduced, they must be decided before business can resume.
Amending Motion	General consent can be used with amendments to motions if the Chairperson feels the group will accept the amendment. "If there is no objection, the motion is so amended." *Restate the motion.*
Motions Commit	Have precedence over the motion to amend. **More than one motion can be on the floor but only one question.** All pending motions must relate to the main motion on the floor. No new business may be introduced.
Point of Order	Motion used if a board member feels the Chairperson's failing to operate within the rules.

Restorative Motions or Motions that Bring Back a Question

Restorative Motion	**Allows a group to change its mind.** o They are a separate category because of their contradiction to the parliamentary rule that once a question has been decided it cannot be brought up again at the same meeting. o Within limits, members have the right to rethink a situation if they feel their decision has been made too quickly or without enough information. o The two most commonly used restorative motions are: ***Rescind*** and ***Reconsider***.
Rescind	**Rescind is the motion to use to quash or nullify a previously adopted motion.** It may strike out an entire motion, resolution, bylaw, etc.

	o Rescind is *not in order* when any action has already been taken as a result of the vote, such as any kind of contract when the other party has been notified. o It must be seconded. o It requires a *two-thirds* vote unless *notice has been given* at the previous meeting, either verbally or in writing. If notice has been given, the motion requires only a *majority* vote.
Reconsider	**Reconsider is the motion which allows a group to reconsider the vote on a motion**. It enables a majority of the members, within a limited time, to bring back a motion for further consideration after it has been acted upon. Its purpose is to prevent hasty or ill-advised action. o Reconsider has special rules to prevent its abuse by a disgruntled minority, since it allows a question already decided to be brought up again. o Rules limit who can make the motion. **It can only be made by someone who voted on the *prevailing* (winning) side.** o **It has a *time limit.* It must be made on the *same day* that the vote to be reconsidered was taken.** o It requires a second. o It may be debated and it opens up the motion to which it is applied to debate. o It requires only a majority vote. o It may be made and seconded while other business is pending because of its time limit. However, it is not debated and voted on until the business on the floor is completed. o All action that might come out of the original motion is stopped at the time that reconsider is made and seconded. This is the main value of the motion, and it should be made as quickly as the situation calling for it is recognized.
Amend a Motion	**Change the wording to make it clearer, more complete, or more acceptable *before the motion is voted upon*.** The amendment must be germane to the motion on the floor to be in order. Adoption of the amendment does not adopt the motion. If the group votes "no" on the amendment, the motion is on the floor in its original wording.
Amend an Amendment	First amendment is called the primary and the amendment to the amendment is the secondary amendment. Only two amendments may be pending at any time. First vote on the amendment to the amendment (secondary), then vote on the original amendment (primary), then vote on the main motion. Amendments require a majority vote.
Friendly Amendments	Change in wording to enhance the original motion – can be changed by general consent.
Hostile Amendments	Gives a different meaning to a motion and may defeat the intent of the main motion.
To Commit or Refer a Motion	Sends the question to a small group (committee) to be studied and put into proper form for the group to consider. Motion includes specific directions as to where the question ought to go (what committee). Motion can be applied to any main motion with any amendments that may be pending. It must be seconded, it can be debated, and requires a majority vote.
Postpone	**Delays action on a question until later in the same meeting or until the next meeting**. *A motion cannot be postponed further than the next regular meeting*. Can be applied to all main motions, it must be seconded, it can be debated, it can be amended (as to time of the postponement), it requires a majority vote. Motion is called up automatically when the time to which it was postponed arrives (place under Unfinished Business on agenda of next meeting).
Limit Debate	**Motion to exercise special control over debate** – reducing the number and length of speeches allowed. Used with any motion, must be seconded, is not debatable, can be amended (but only as to the length of speeches or when the vote will be taken), requires 2/3 vote, vote must be taken by show of hands or a rising vote in a large group. (Need a timekeeper and timer if speeches have a time limit.)

Previous Question	**The motion used to cut off debate and to bring the group to an immediate vote on the pending motion. (Call the question for an immediate vote).** Previous question can be ruled out of order if the motion is debatable and has not received debate. Motion requires 2/3 vote (by show of hands or standing vote). Not debatable.
Postpone Indefinitely	Lowest-ranked subsidiary motion is used to kill a main motion. It avoids a direct vote on the question on the floor. Shouldn't be used.
Lay on the Table	Highest-ranked subsidiary motion. Cannot be amended or debated. It is out of order when used to "kill or avoid dealing with a measure". **Was designed as a courtesy motion to allow a group to set aside a question for something more important, such as arrival of a speaker.**
Withdraw a Motion	**Permission to withdraw a motion allows a member who realizes he has made a hasty or ill-advised motion to withdraw it with the consent of the group**. This device saves time in disposing of the motion. The presiding officer usually handles the request by use of general consent.
Dilatory Tactics	A dilatory tactic is the misuse of parliamentary procedure to deliberately delay or prevent action in a meeting. It is the duty of the presiding officer to prevent a dissident minority from misusing legitimate forms of motions to obstruct business. Such motions should be ruled out of order or those members engaged in such game playing should not be recognized.

TYPES OF VOTES

Majority Vote	• **More than half of the votes cast.** • The minority has the right to be heard, but once a decision has been reached by a majority of the members present and voting, the minority must then respect and abide by the decision.
Silence is Consent	Those members who do not vote, agree to go along with the decision of the majority by their silence.
Two-thirds Vote	**A two-thirds vote is necessary whenever you are limiting or taking away the rights of members or whenever you are changing something that has already been decided.** A two-thirds vote has at least twice as many votes on the winning side as on the losing side. A show of hands should be taken for *all* motions requiring a *two-thirds vote*. If a motion requires a two-thirds vote, the Chairperson should inform the group of that.
General Consent	**Is an informal agreement of the group, the method in which action is taken without a formal vote or on occasion without a motion.** The Chairperson initiates the procedure to expedite business. Usually done to approve and correct the minutes. • The presiding officer always pauses after asking if there is any objection. If there is *any* objection, the matter is put to a vote in the usual way. • A member may object because he feels it is important to have a formal vote and dispel any suspicion of railroading.
Tie Vote	Is a *lost* vote because a majority was not obtained. The *Chairperson is not compelled to break a tie*. While the Chairperson has a right to vote as a member, it is recommended he not vote unless the vote is by ballot. He may also vote in cases where the vote would change the result. The Chairperson should appear impartial.